YAMAHA 2016

SERVICE MANUAL

MTN320-A

MT-03

B08-F8197-E0

EAS20002

MTN320-A
SERVICE MANUAL
©2015 by PT Yamaha Indonesia Motor Manufacturing
First edition, November 2015
All rights reserved.
Any reproduction or unauthorized use without the written permission of PT Yamaha Indonesia Motor Manufacturing is expressly prohibited.

EAS20003

IMPORTANT

This manual was produced by the PT Yamaha Indonesia Motor Manufacturing primarily for use by Yamaha dealers and their qualified mechanics. It is not possible to include all the knowledge of a mechanic in one manual. Therefore, anyone who uses this book to perform maintenance and repairs on Yamaha vehicles should have a basic understanding of mechanics and the techniques to repair these types of vehicles. Repair and maintenance work attempted by anyone without this knowledge is likely to render the vehicle unsafe and unfit for use.

PT Yamaha Indonesia Motor Manufacturing is continually striving to improve all of its models. Modifications and significant changes in specifications or procedures will be forwarded to all authorized Yamaha dealers and will appear in future editions of this manual where applicable.

TIP

Designs and specifications are subject to change without notice.

EAS30001

IMPORTANT MANUAL INFORMATION

Particularly important information is distinguished in this manual by the following notations.

⚠	**This is the safety alert symbol. It is used to alert you to potential personal injury hazards. Obey all safety messages that follow this symbol to avoid possible injury or death.**
⚠ **WARNING**	**A WARNING indicates a hazardous situation which, if not avoided, could result in death or serious injury.**
NOTICE	**A NOTICE indicates special precautions that must be taken to avoid damage to the vehicle or other property.**
TIP	A TIP provides key information to make procedures easier or clearer.

EAS20004

HOW TO USE THIS MANUAL

This manual is intended as a handy, easy-to-read reference book for the mechanic. Comprehensive explanations of all installation, removal, disassembly, assembly, repair and check procedures are laid out with the individual steps in sequential order.

- The manual is divided into chapters and each chapter is divided into sections. The current section title “1” is shown at the top of each page.
- Sub-section titles “2” appear in smaller print than the section title.
- To help identify parts and clarify procedure steps, there are exploded diagrams “3” at the start of each removal and disassembly section.
- Numbers “4” are given in the order of the jobs in the exploded diagram. A number indicates a disassembly step.
- Symbols “5” indicate parts to be lubricated or replaced.
  Refer to “SYMBOLS”.
- A job instruction chart “6” accompanies the exploded diagram, providing the order of jobs, names of parts, notes in jobs, etc. This step explains removal and disassembly procedure only. For installation and assembly procedure, reverse the steps.
- Jobs “7” requiring more information (such as special tools and technical data) are described sequentially.

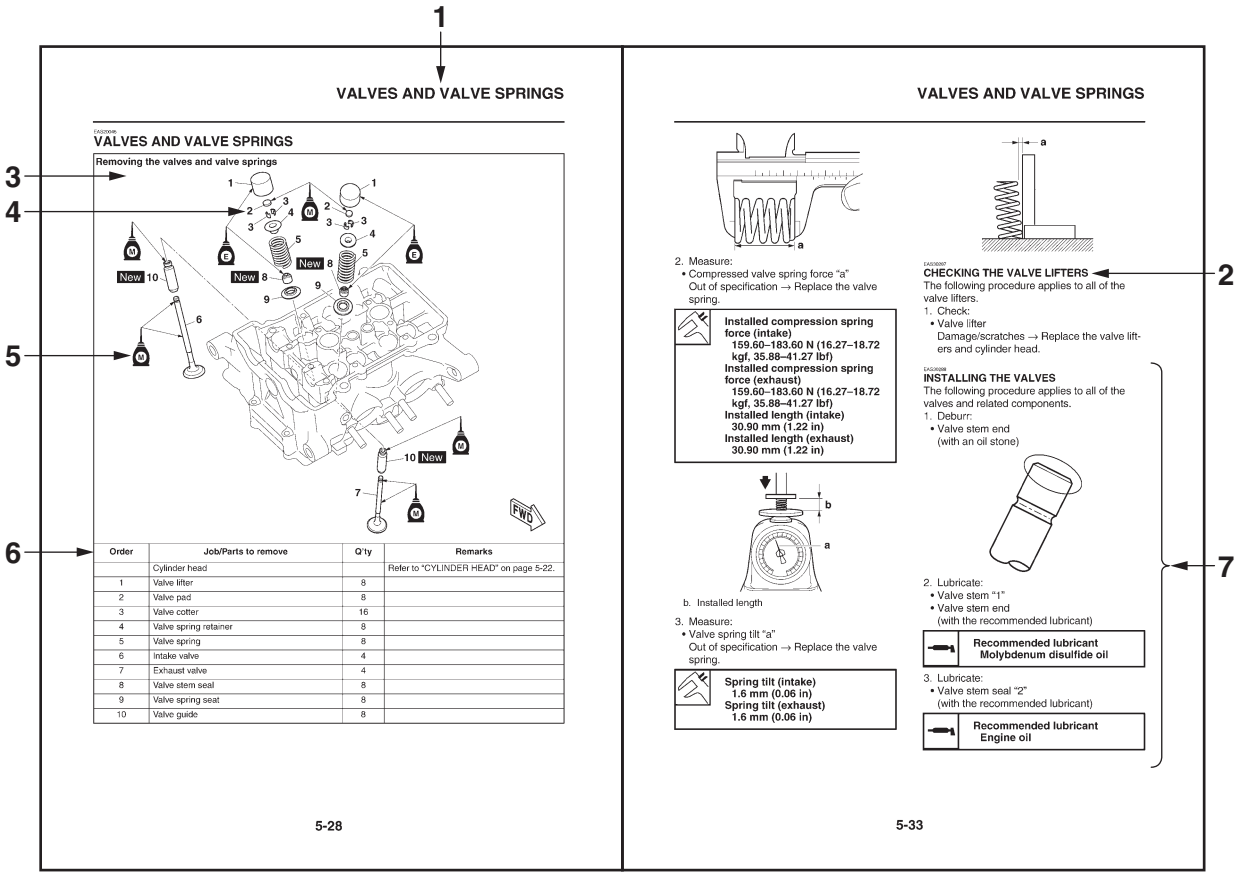

EAS20005

SYMBOLS

The following symbols are used in this manual for easier understanding.

TIP

The following symbols are not relevant to every vehicle.

SYMBOL	DEFINITION	SYMBOL	DEFINITION
	Serviceable with engine mounted	G	Gear oil
	Filling fluid	M	Molybdenum disulfide oil
	Lubricant	BF	Brake fluid
	Special tool	B	Wheel bearing grease
	Tightening torque	LS	Lithium-soap-based grease
	Wear limit, clearance	M	Molybdenum disulfide grease
	Engine speed	S	Silicone grease
	Electrical data	LT	Apply locking agent (LOCTITE®).
E	Engine oil	New	Replace the part with a new one.
S	Silicone fluid		

EAS10003

TABLE OF CONTENTS

GENERAL INFORMATION	1
SPECIFICATIONS	2
PERIODIC CHECKS AND ADJUSTMENTS	3
CHASSIS	4
ENGINE	5
COOLING SYSTEM	6
FUEL SYSTEM	7
ELECTRICAL SYSTEM	8
TROUBLESHOOTING	9

GENERAL INFORMATION

IDENTIFICATION 1-1
VEHICLE IDENTIFICATION NUMBER 1-1
MODEL LABEL 1-1

FEATURES 1-2
MULTI-FUNCTION METER UNIT 1-2

IMPORTANT INFORMATION 1-7
PREPARATION FOR REMOVAL AND DISASSEMBLY 1-7
REPLACEMENT PARTS 1-7
GASKETS, OIL SEALS AND O-RINGS 1-7
LOCK WASHERS/PLATES AND COTTER PINS 1-7
BEARINGS AND OIL SEALS 1-8
CIRCLIPS 1-8
RUBBER PARTS 1-8

BASIC SERVICE INFORMATION 1-9
QUICK FASTENERS 1-9
ELECTRICAL SYSTEM 1-10

SPECIAL TOOLS 1-15

EAS20007
IDENTIFICATION

EAS30002
VEHICLE IDENTIFICATION NUMBER
The vehicle identification number “1” is stamped into the frame under the passenger seat.

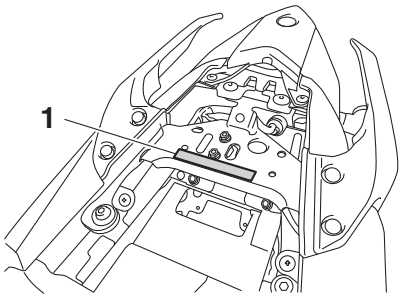

EAS30003
MODEL LABEL
The model label “1” is affixed to the frame under the passenger seat. This information will be needed to order spare parts.

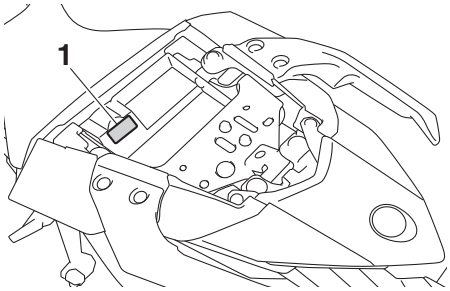

EAS20008
FEATURES

EAS30982
MULTI-FUNCTION METER UNIT

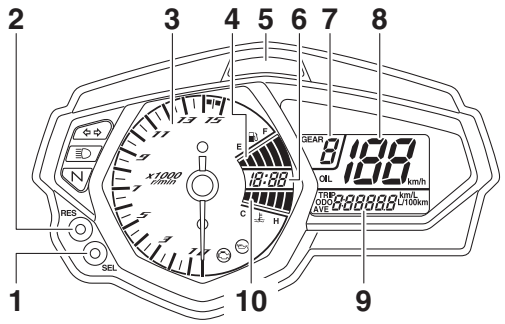

1. “SEL” button
2. “RES” button
3. Tachometer
4. Fuel meter
5. Shift timing indicator light
6. Clock
7. Transmission gear display
8. Speedometer
9. Multi-function display
10. Coolant temperature meter

EWA12423
WARNING

Be sure to stop the vehicle before making any setting changes to the multi-function meter unit. Changing settings while riding can distract the operator and increase the risk of an accident.

The multi-function meter unit is equipped with the following:
- a speedometer
- a tachometer
- a clock
- a fuel meter
- a coolant temperature meter
- a transmission gear display
- a multi-function display
- a shift timing indicator light
- a self-diagnosis device

TIP

Be sure to turn the key to “◯” before using the “SEL” and “RES” buttons, except for setting the shift timing indicator light control mode.

Speedometer
The speedometer shows the vehicle’s traveling speed.

Tachometer

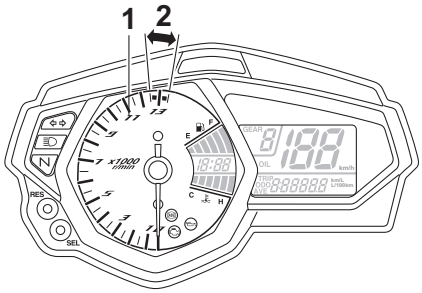

1. Tachometer
2. Tachometer red zone

The tachometer allows the rider to monitor the engine speed and keep it within the ideal power range.
When the key is turned to “◯”, the tachometer will sweep across the r/min range and then return to zero r/min in order to test the electrical circuit.

ECA19660
NOTICE

Do not operate the engine in the tachometer red zone.

Clock

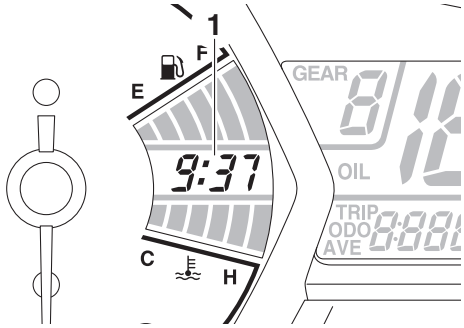

1. Clock

The clock displays when the key is turned to “◯”.

[To set the clock]

1. Turn the key to "◯".
2. Push the "SEL" button and "RES" button together for at least two seconds.
3. When the hour digits start flashing, push the "RES" button to set the hours.
4. Push the "SEL" button, and the minute digits will start flashing.
5. Push the "RES" button to set the minutes.
6. Push the "SEL" button and then release it to start the clock.

Fuel meter

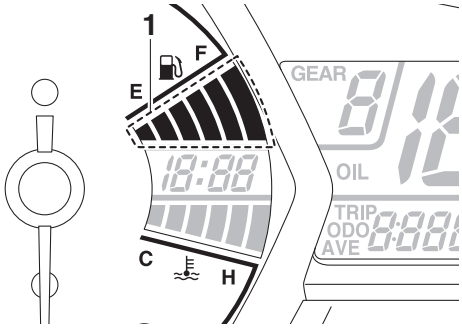

1. Fuel meter

The fuel meter indicates the amount of fuel in the fuel tank.
When the key is turned to "◯", the display segments of the fuel meter will sweep once across the fuel level range and then return to the current amount in order to test the electrical circuit.
The display segments of the fuel meter disappear towards "E" (Empty) as the fuel level decreases. When the last segment starts flashing, refuel as soon as possible.

TIP

This fuel meter is equipped with a self-diagnosis system. If a problem is detected in the electrical circuit, the following cycle is repeated until the malfunction is corrected: fuel level segments flash eight times, then go off for approximately three seconds. If this occurs, check the electrical circuit. Refer to "SIGNALING SYSTEM" on page 8-21.

Coolant temperature meter

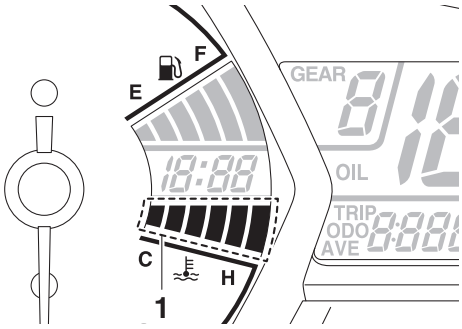

1. Coolant temperature meter

The coolant temperature meter indicates the temperature of the coolant.
When the key is turned to "◯", the display segments of the digital coolant temperature gauge will sweep once across the temperature range and then return to "C" in order to test the electrical circuit.
If the last segment on the right flashes, stop the vehicle, then stop the engine, and let the engine cool.

ECA10022

NOTICE

Do not continue to operate the engine if it is overheating.

TIP

The coolant temperature varies with changes in the weather and engine load.

Transmission gear display

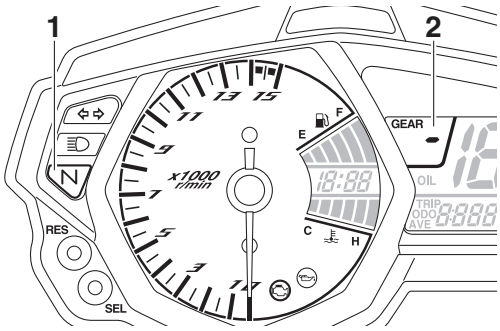

1. Neutral indicator light "N"
2. Transmission gear display

This display shows the selected gear. The neutral position is indicated by "-" and by the neutral indicator light.

Multi-function display

1. Multi-function display

The multi-function display is equipped with the following:
- an odometer
- two tripmeters
- a fuel reserve tripmeter
- an instantaneous fuel consumption display
- an average fuel consumption display
- an oil change tripmeter
- an oil change indicator

Push the “SEL” button to switch the display between the odometer mode “ODO”, tripmeter modes “TRIP 1” and “TRIP 2”, instantaneous fuel consumption mode “km/L” or “L/100 km”, average fuel consumption mode “AVE_ _._ km/L” or “AVE_ _._ L/100 km” and oil change tripmeter mode “OIL TRIP” in the following order:

ODO → TRIP 1 → TRIP 2 → km/L or L/100 km → AVE_ _._ km/L or AVE_ _._ L/100 km → OIL TRIP → ODO

If the left segment of the fuel meter starts flashing, the display automatically changes to the fuel reserve tripmeter mode “TRIP F” and starts counting the distance traveled from that point. In that case, push the “SEL” button to switch the display between the various tripmeter, odometer, instantaneous fuel consumption and average fuel consumption modes in the following order:

TRIP F → km/L or L/100 km → AVE_ _._ km/L or AVE_ _._ L/100 km → OIL TRIP → ODO → TRIP 1 → TRIP 2 → TRIP F

To reset a tripmeter, select it by pushing the “SEL” button, and then push the “RES” button for at least one second.

If you do not reset the fuel reserve tripmeter manually, it resets itself automatically and the display returns to the prior mode after refueling and traveling 5 km (3 mi).

Instantaneous fuel consumption display

1. Instantaneous fuel consumption display

The instantaneous fuel consumption display can be set to either “MPG” (For the UK only) “L/100 km” or “km/L”.
- “MPG” (For the UK only): The distance that can be traveled on 1.0 US gal of fuel under the current riding conditions is shown.
- “L/100 km”: The amount of fuel necessary to travel 100 km under the current riding conditions is shown.
- “km/L”: The distance that can be traveled on 1.0 L of fuel under the current riding conditions is shown.

To switch between the instantaneous fuel consumption displays, push the “SEL” button for one second.

TIP

If traveling at speeds under 20 km/h (12 mi/h), “_ _._” is displayed.

Average fuel consumption display

1. Average fuel consumption display

The average fuel consumption display can be set to either “AVE_ _._ km/L” or “AVE_ _._ L/100 km”.

This display shows the average fuel consumption since it was last reset.
- “AVE_ _._ km/L”: The average distance that can be traveled on 1.0 L of fuel is shown.
- “AVE_ _._ L/100 km”: The average amount of fuel necessary to travel 100 km is shown.

To switch between the average fuel consumption displays, push the “SEL” button for one second.
To reset the average fuel consumption display, push the “RES” button for at least one second.

TIP

After resetting the average fuel consumption display, “_ _._” is shown until the vehicle has traveled 1 km (0.6 mi).

Oil change tripmeter

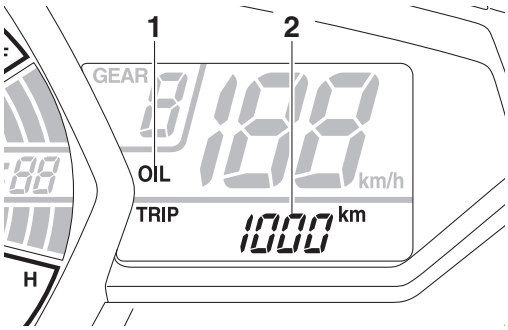

1. Oil change indicator “OIL”
2. Oil change tripmeter

The oil change tripmeter shows the distance traveled since it was last reset (i.e., since the last oil change).
The oil change indicator “OIL” will flash at the initial 1000 km, then at 5000 km and every 5000 km thereafter to indicate that the engine oil should be changed.
After changing the engine oil, reset the oil change tripmeter and the oil change indicator. To reset them both, select the oil change tripmeter, and then push the “RES” button for one second. Then, while “OIL” and the oil change tripmeter are flashing, push the “RES” button for three seconds. The oil change indicator will be reset.
If the engine oil is changed before the oil change indicator comes on (i.e., before the periodic oil change interval has been reached), the oil change tripmeter must be reset for the next periodic oil change to be indicated at the correct time.

Shift timing indicator light

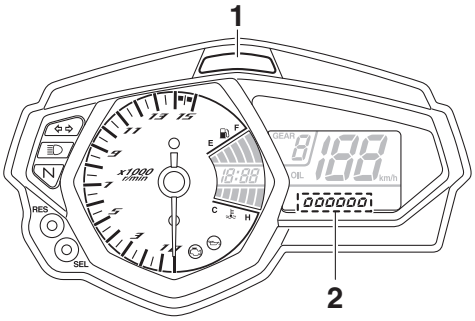

1. Shift timing indicator light
2. Brightness level display

The shift timing indicator light has four settings which can be adjusted.
- Flashing pattern: this function allows you to choose whether or not the indicator light will come on and whether it should flash or stay on when activated.
- Activation point: this function allows you to select the engine speed at which the indicator light is activated.
- Deactivation point: this function allows you to select the engine speed at which the indicator light is deactivated.
- Brightness: this function allows you to adjust the brightness of the indicator light.

[To adjust the shift timing indicator light]
1. Turn the key to “⊗”.
2. Push and hold the “SEL” button.
3. Turn the key to “◯”, and then release the “SEL” button after five seconds. The shift timing indicator light can now be adjusted.

[To set the flashing pattern]
1. Push the “RES” button to select one of the following flashing pattern settings:
   - On: the indicator light stays on when activated. (This setting is selected when the indicator light stays on.)
   - Flash: the indicator light flashes when activated. (This setting is selected when the indicator light flashes four times per second.)
   - Off: the indicator light is deactivated; in other words, it does not come on or flash. (This setting is selected when the indicator light flashes once every two seconds.)

2. Push the “SEL” button to confirm the selected flashing pattern. The shift timing indicator light changes to the activation point setting mode.

The tachometer will show the current setting r/min for the activation point and deactivation point setting modes.

[To set the shift activation point]

TIP

The shift timing indicator light activation point can be set between 7000 r/min and 13500 r/min. From 7000 r/min to 12000 r/min, the indicator light can be set in increments of 500 r/min. From 12000 r/min to 13500 r/min, the indicator light can be set in increments of 200 r/min.

1. Push the “RES” button to select the desired engine speed for activating the indicator light.
2. Push the “SEL” button to confirm the selected engine speed. The control mode changes to the deactivation point setting mode.

[To set the deactivation point]

TIP

- The shift timing indicator light deactivation point can be set between 7000 r/min and 13500 r/min. From 7000 r/min to 12000 r/min, the indicator light can be set in increments of 500 r/min. From 12000 r/min to 13500 r/min, the indicator light can be set in increments of 200 r/min.
- Be sure to set the deactivation point to a higher engine speed than for the activation point, otherwise the shift timing indicator light will not come on.

1. Push the “RES” button to select the desired engine speed for deactivating the indicator light.
2. Push the “SEL” button to confirm the selected engine speed. The control mode changes to the brightness setting mode.

[To adjust the brightness]

1. Push the “RES” button to select the desired shift indicator light brightness level.
2. Push the “SEL” button to confirm the selected brightness level. The display exits the shift timing light control mode and returns to the standard multi-function display mode.

Self-diagnosis device

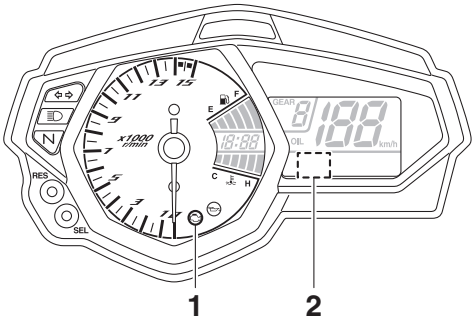

1. Engine trouble warning light “ ”
2. Fault code display

This model is equipped with a self-diagnosis device for various electrical circuits.
If a problem is detected in any of those circuits, the engine trouble warning light will come on and the display will indicate a fault code.
If the display indicates any fault codes, note the code number, and then check the fuel injection system. Refer to “FUEL INJECTION SYSTEM” on page 8-33.

ECA20360

NOTICE

If the display indicates a fault code, the vehicle should be checked as soon as possible in order to avoid engine damage.

EAS20009
IMPORTANT INFORMATION

EAS30006
PREPARATION FOR REMOVAL AND DISASSEMBLY

1. Before removal and disassembly, remove all dirt, mud, dust and foreign material.

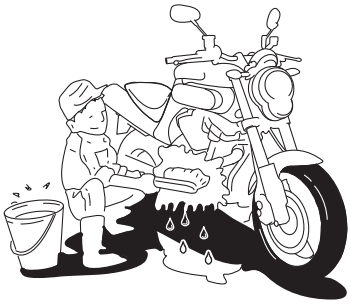

2. Use only the proper tools and cleaning equipment.
   Refer to “SPECIAL TOOLS” on page 1-15.
3. When disassembling, always keep mated parts together. This includes gears, cylinders, pistons and other parts that have been “mated” through normal wear. Mated parts must always be reused or replaced as an assembly.

4. During disassembly, clean all of the parts and place them in trays in the order of disassembly. This will speed up assembly and allow for the correct installation of all parts.
5. Keep all parts away from any source of fire.

EAS30007
REPLACEMENT PARTS

Use only genuine Yamaha parts for all replacements. Use oil and grease recommended by Yamaha for all lubrication jobs. Other brands may be similar in function and appearance, but inferior in quality.

EAS30008
GASKETS, OIL SEALS AND O-RINGS

1. When overhauling the engine, replace all gaskets, seals and O-rings. All gasket surfaces, oil seal lips and O-rings must be cleaned.
2. During reassembly, properly oil all mating parts and bearings and lubricate the oil seal lips with grease.

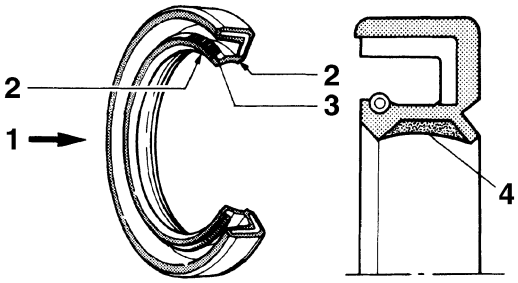

1. Oil
2. Lip
3. Spring
4. Grease

EAS30009
LOCK WASHERS/PLATES AND COTTER PINS

After removal, replace all lock washers/plates “1” and cotter pins. After the bolt or nut has been tightened to specification, bend the lock tabs along a flat of the bolt or nut.

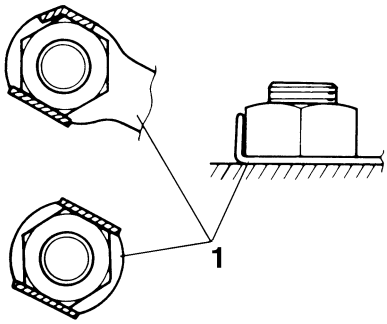

EAS30010
BEARINGS AND OIL SEALS
Install bearings “1” and oil seals “2” so that the manufacturer marks or numbers are visible. When installing oil seals, lubricate the oil seal lips with a light coat of lithium-soap-based grease. Oil bearings liberally when installing, if appropriate.

ECA13300
NOTICE

Do not spin the bearing with compressed air because this will damage the bearing surfaces.

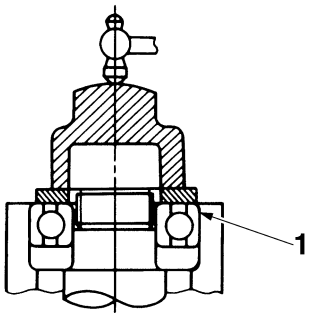

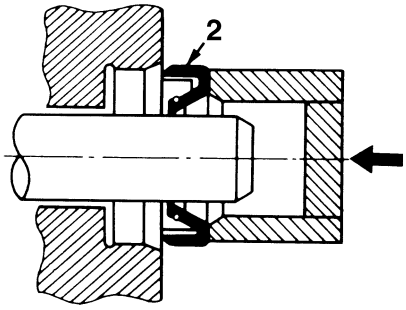

EAS30011
CIRCLIPS
Before reassembly, check all circlips carefully and replace damaged or distorted circlips. Always replace piston pin clips after one use. When installing a circlip “1”, make sure the sharp-edged corner “2” is positioned opposite the thrust “3” that the circlip receives.

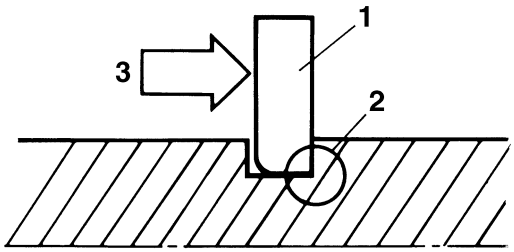

EAS30012
RUBBER PARTS
Check rubber parts for deterioration during inspection. Some of the rubber parts are sensitive to gasoline, flammable oil, grease, etc. Do not allow any items other than the specified one to contact the parts.

EAS20010
BASIC SERVICE INFORMATION

EAS30013
QUICK FASTENERS

Rivet type
1. Remove:
   • Quick fastener

TIP

To remove the quick fastener, push its pin with a screwdriver, then pull the fastener out.

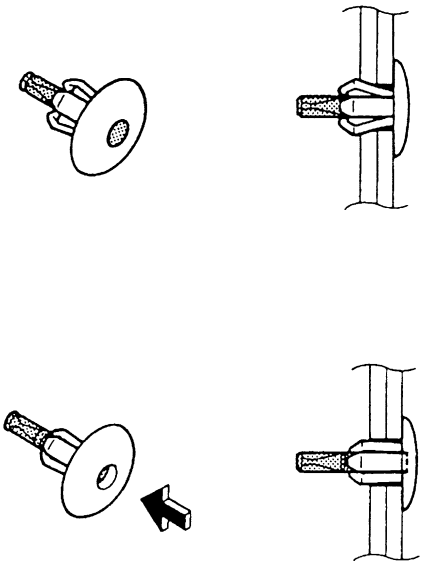

2. Install:
   • Quick fastener

TIP

To install the quick fastener, push its pin so that it protrudes from the fastener head, then insert the fastener into the part to be secured and push the pin in with a screwdriver. Make sure that the pin is flush with the fastener's head.

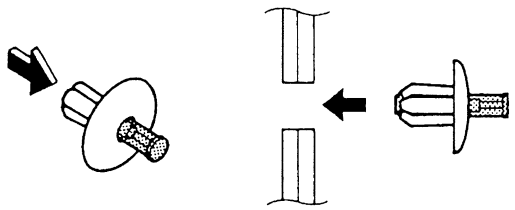

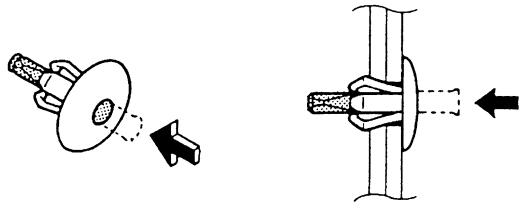

Screw type
1. Remove:
   • Quick fastener

TIP

To remove the quick fastener, loosen the screw with a screwdriver, then pull the fastener out.

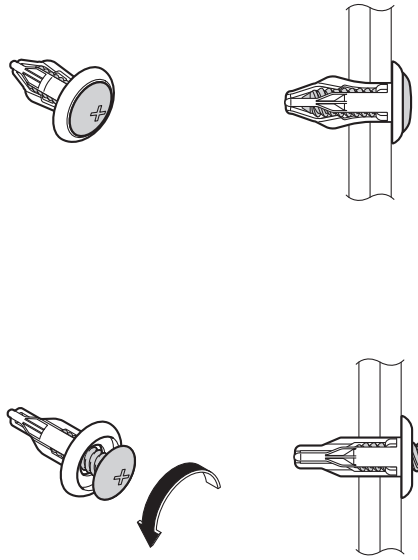

2. Install:
   • Quick fastener

TIP

To install the quick fastener, insert the fastener into the part to be secured and tighten the screw.

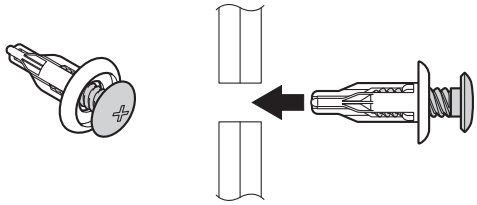

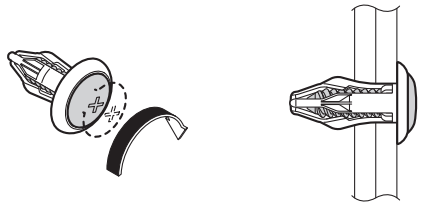

EAS30014

ELECTRICAL SYSTEM

Electrical parts handling

ECA16600

NOTICE

Never disconnect a battery lead while the engine is running; otherwise, the electrical components could be damaged.

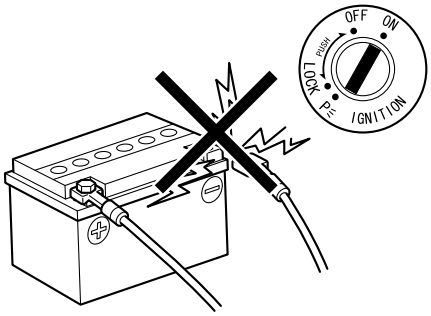

ECA16751

NOTICE

When disconnecting the battery leads from the battery, be sure to disconnect the negative battery lead first, then the positive battery lead. If the positive battery lead is disconnected first and a tool or similar item contacts the vehicle, a spark could be generated, which is extremely dangerous.

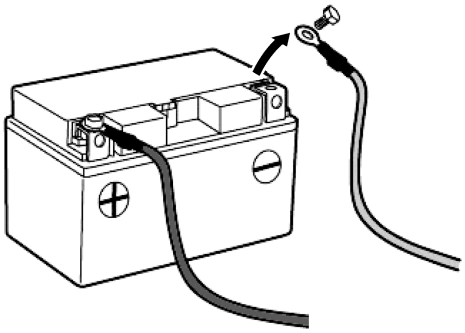

TIP

If a battery lead is difficult to disconnect due to rust on the battery terminal, remove the rust using hot water.

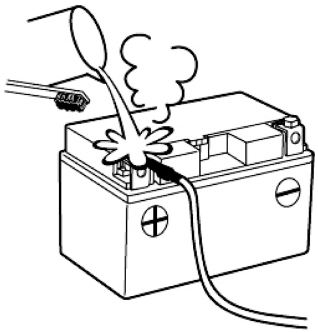

ECA16760

NOTICE

Be sure to connect the battery leads to the correct battery terminals. Reversing the battery lead connections could damage the electrical components.

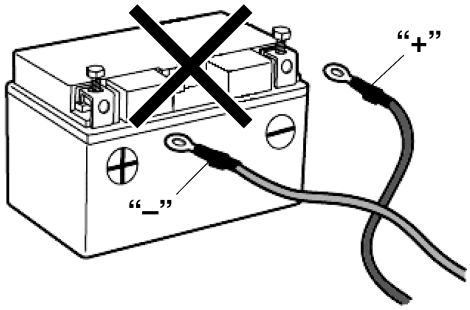

ECA16771

NOTICE

When connecting the battery leads to the battery, be sure to connect the positive battery lead first, then the negative battery lead. If the negative battery lead is connected first and a tool or similar item contacts the vehicle while the positive battery lead is being connected, a spark could be generated, which is extremely dangerous.

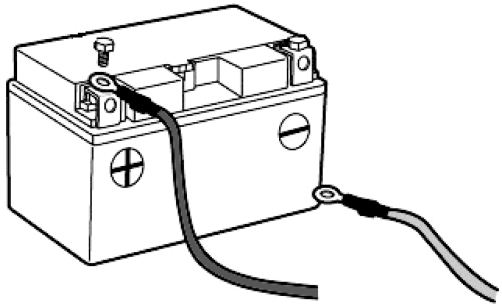

ECA16610

NOTICE

Turn the main switch to "OFF" before disconnecting or connecting an electrical component.

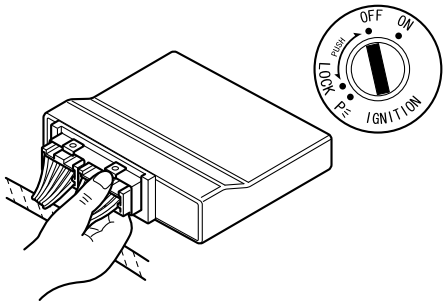

ECA16620

NOTICE

Handle electrical components with special care, and do not subject them to strong shocks.

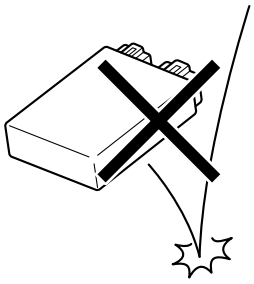

ECA16630

NOTICE

Electrical components are very sensitive to and can be damaged by static electricity. Therefore, never touch the terminals and be sure to keep the contacts clean.

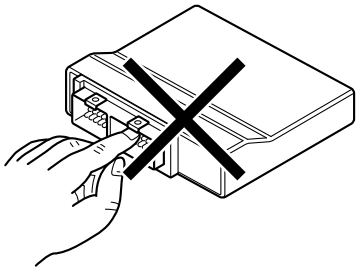

TIP

When resetting the ECU by turning the main switch to “OFF”, be sure to wait approximately 5 seconds before turning the main switch back to “ON”.

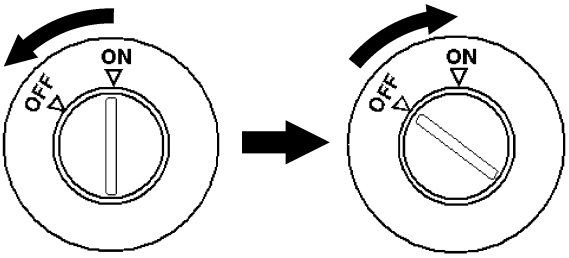

Checking the electrical system

TIP

Before checking the electrical system, make sure that the battery voltage is at least 12 V.

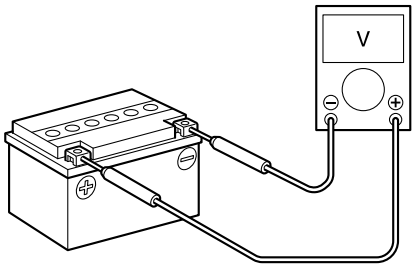

ECA14371

NOTICE

Never insert the tester probes into the coupler terminal slots. Always insert the probes from the opposite end “a” of the coupler, taking care not to loosen or damage the leads.

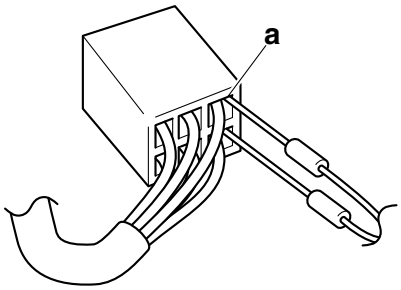

ECA16640

NOTICE

For waterproof couplers, never insert the tester probes directly into the coupler. When performing any checks using a waterproof coupler, use the specified test harness or a suitable commercially available test harness.

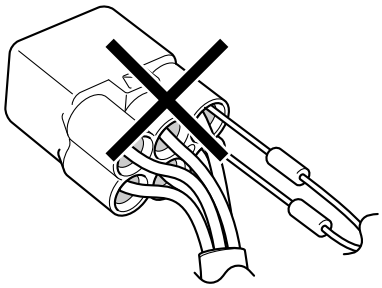

Checking the connections

Check the leads, couplers, and connectors for stains, rust, moisture, etc.

1. Disconnect:
   - Lead
   - Coupler
   - Connector

ECA16780

NOTICE

- **When disconnecting a coupler, release the coupler lock, hold both sections of the coupler securely, and then disconnect the coupler.**
- **There are many types of coupler locks; therefore, be sure to check the type of coupler lock before disconnecting the coupler.**

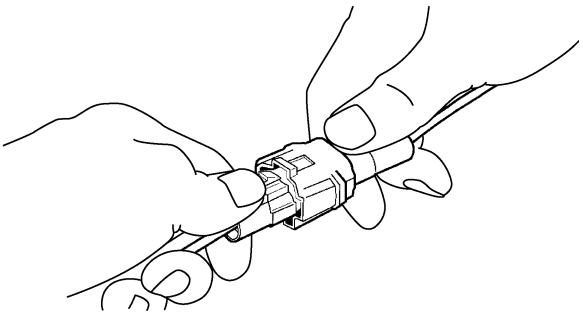

ECA16790

NOTICE

When disconnecting a connector, do not pull the leads. Hold both sections of the connector securely, and then disconnect the connector.

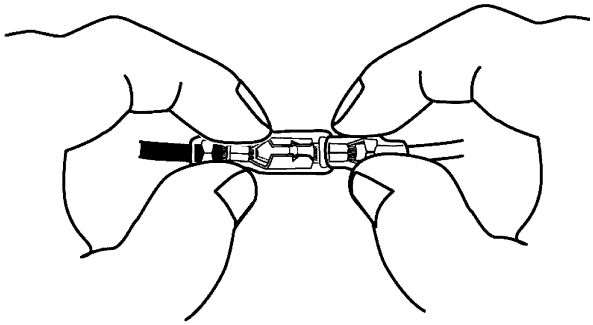

2. Check:
   - Lead
   - Coupler
   - Connector

   Moisture → Dry with an air blower.
   Rust/stains → Connect and disconnect several times.

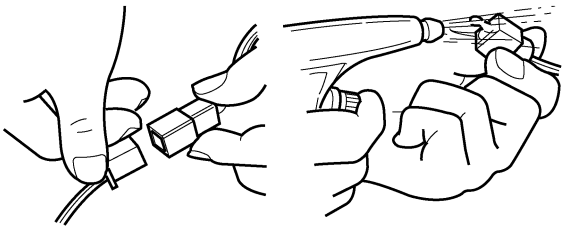

3. Check:
   - All connections

   Loose connection → Connect properly.

TIP

- If the pin “1” on the terminal is flattened, bend it up.
- After disassembling and assembling a coupler, pull on the leads to make sure that they are installed securely.

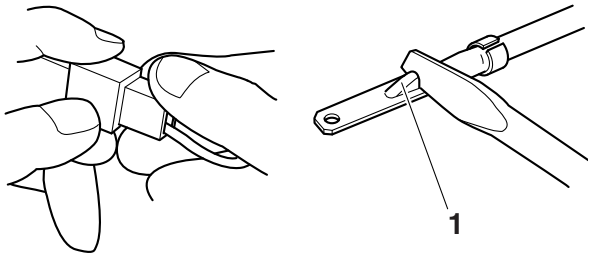

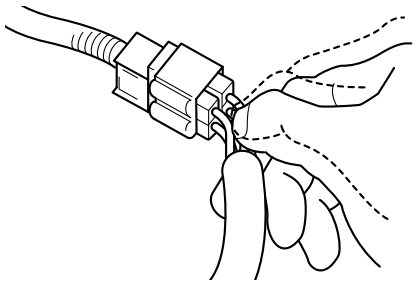

4. Connect:
   - Lead
   - Coupler
   - Connector

TIP

- When connecting a coupler or connector, push both sections of the coupler or connector together until they are connected securely.
- Make sure all connections are tight.

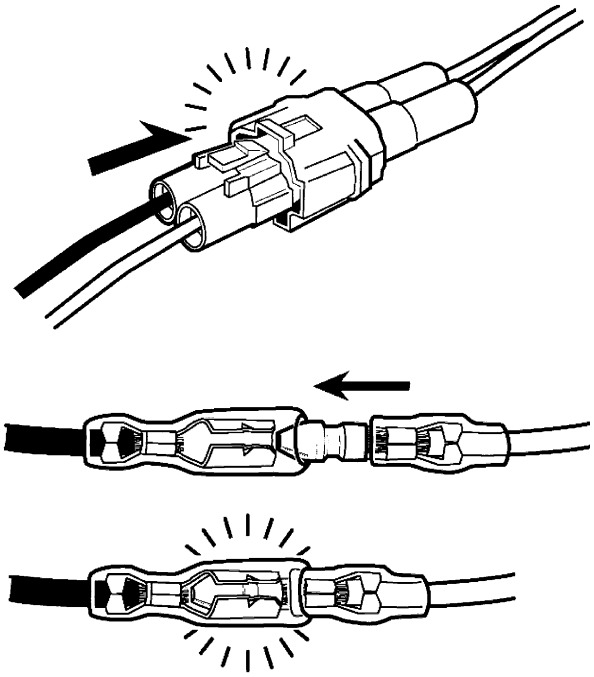

5. Check:
   - Continuity
     (with the pocket tester)

Pocket tester
90890-03112
Analog pocket tester
YU-03112-C

TIP

- If there is no continuity, clean the terminals.
- When checking the wire harness, perform steps (1) to (4).
- As a quick remedy, use a contact revitalizer available at most part stores.

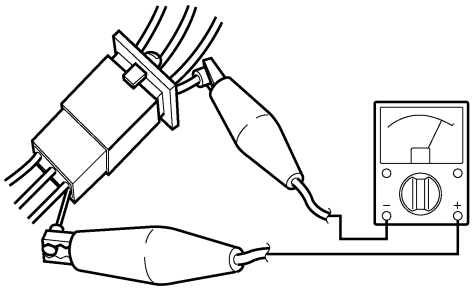

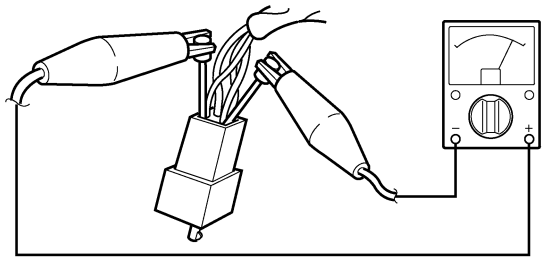

6. Check:
   - Resistance

Pocket tester
90890-03112
Analog pocket tester
YU-03112-C

TIP

The resistance values shown were obtained at the standard measuring temperature of 20 °C (68 °F). If the measuring temperature is not 20 °C (68 °F), the specified measuring conditions will be shown.

Coolant temperature sensor resistance
2521–2786 Ω at 20 °C (2521–2786 Ω at 68 °F)

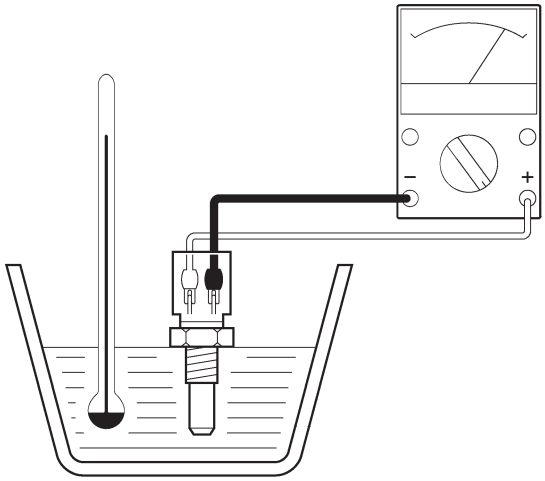

EAS20012

SPECIAL TOOLS

The following special tools are necessary for complete and accurate tune-up and assembly. Use only the appropriate special tools as this will help prevent damage caused by the use of inappropriate tools or improvised techniques. Special tools, part numbers or both may differ depending on the country. When placing an order, refer to the list provided below to avoid any mistakes.

TIP

- For U.S.A. and Canada, use part number starting with “YM-”, “YU-”, or “ACC-”.
- For others, use part number starting with “90890-”.

Tool name/Tool No.	Illustration	Reference pages
Pocket tester 90890-03112 Analog pocket tester YU-03112-C	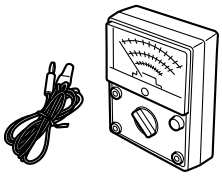	1-13, 1-13, 8-115, 8-116, 8-117, 8-117, 8-121, 8-122, 8-123, 8-124, 8-124, 8-125, 8-125, 8-127, 8-127, 8-128, 8-129, 8-129, 8-130
Thickness gauge 90890-03180 Feeler gauge set YU-26900-9	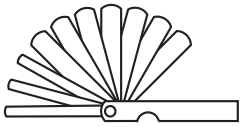	3-6, 3-6, 4-25, 4-34, 5-54
Valve lapper 90890-04101 Valve lapping tool YM-A8998	90890-04101 YM-A8998 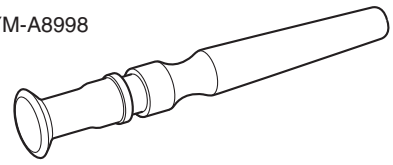	3-6
Yamaha diagnostic tool 90890-03231	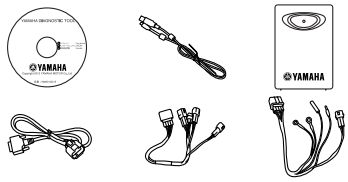	3-8, 3-11, 4-66, 4-67, 7-13, 7-13, 8-36, 8-86, 8-108

Tool name/Tool No.	Illustration	Reference pages
Vacuum gauge 90890-03094 Vacuummate YU-44456	90890-03094 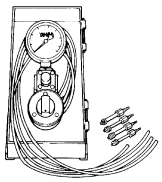 YU-44456 	3-8
Carburetor angle driver 2 90890-03173	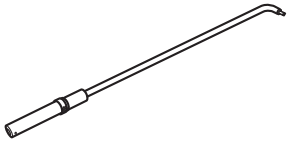	3-9
Steering nut wrench 90890-01403 Exhaust flange nut wrench YU-A9472	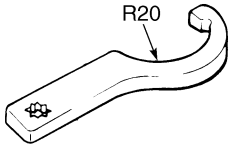 \	3-19, 4-85
Oil filter wrench 90890-01426 Oil filter wrench YU-38411	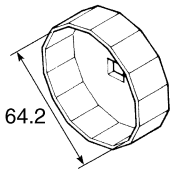 \	3-22, 5-73
Damper rod holder 90890-01460	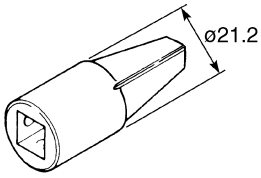 \	4-77, 4-79
T-handle 90890-01326 T-handle 3/8" drive 60 cm long YM-01326	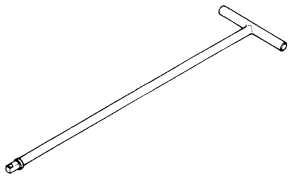	4-77, 4-79
Fork seal driver weight 90890-01367 Replacement hammer YM-A9409-7	90890-01367 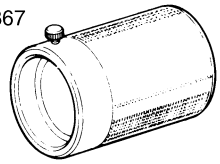 YM-A9409-7/YM-A5142-4 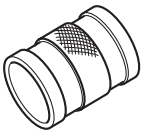	4-80, 4-80, 4-80

Tool name/Tool No.	Illustration	Reference pages
Fork seal driver attachment (ø41) 90890-01381 Replacement 41 mm YM-A5142-2	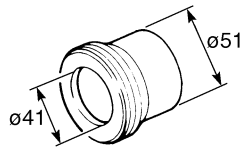	4-80, 4-80
Extension 90890-04136	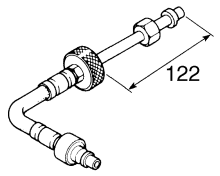	5-1
Compression gauge 90890-03081 Engine compression tester YU-33223	90890-03081 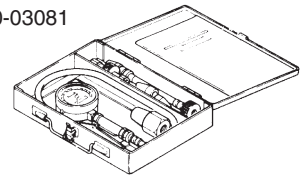 YU-33223 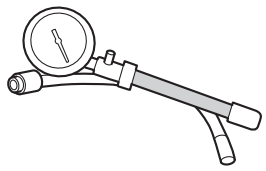	5-1
Rotor holding tool 90890-01235 Universal magneto and rotor holder YU-01235	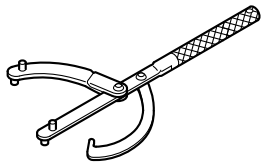	5-16, 5-18
Valve spring compressor 90890-04019 Valve spring compressor YM-04019	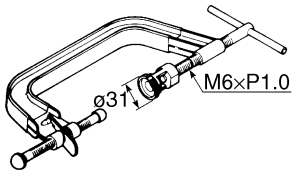	5-28, 5-33
Valve spring compressor attachment 90890-04108 Valve spring compressor adapter 22 mm YM-04108	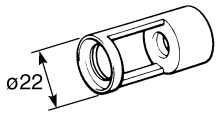	5-28, 5-33
Valve guide remover (ø4.5) 90890-04116 Valve guide remover (4.5 mm) YM-04116	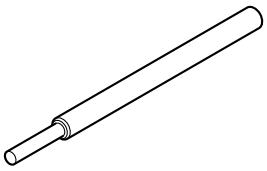	5-30
Valve guide installer (ø4.5) 90890-04117 Valve guide installer (4.5 mm) YM-04117	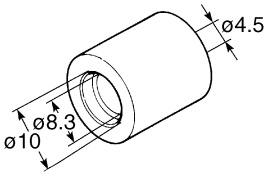	5-30

Tool name/Tool No.	Illustration	Reference pages
Valve guide reamer (ø4.5) 90890-04118 Valve guide reamer (4.5 mm) YM-04118	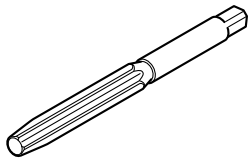	5-30
Piston pin puller set 90890-01304 Piston pin puller YU-01304	90890-01304 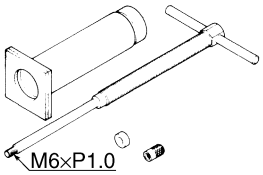 YU-01304 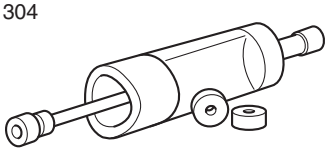	5-36
Rotor holding tool 90890-04166 YM-04166	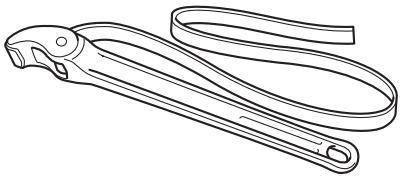	5-43, 5-43, 5-44, 5-45
Flywheel puller 90890-01404 Flywheel puller YM-01404	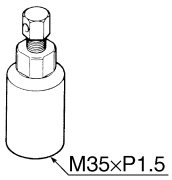	5-43
Yamaha bond No. 1215 90890-85505 (Three bond No.1215®)	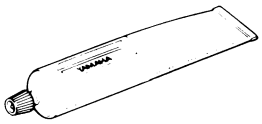	5-45, 5-74, 5-75
Digital circuit tester 90890-03174 Model 88 Multimeter with tachometer YU-A1927	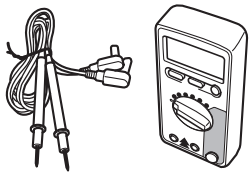	5-48, 8-126
Universal clutch holder 90890-04086 Universal clutch holder YM-91042	90890-04086 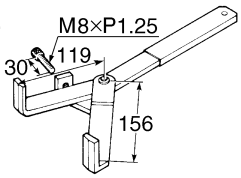 YM-91042 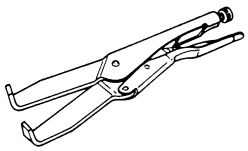	5-53, 5-56

Tool name/Tool No.	Illustration	Reference pages
Radiator cap tester 90890-01325 Mityvac cooling system tester kit YU-24460-A	90890-01325 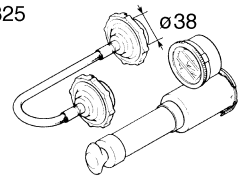 YU-24460-A 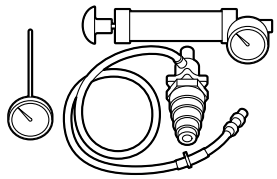	6-3
Radiator cap tester adapter 90890-01352 Pressure tester adapter YU-33984	90890-01352 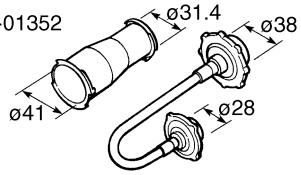 YU-33984 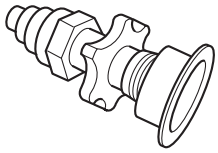	6-3
Mechanical seal installer 90890-04145	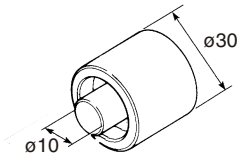	6-9
Middle driven shaft bearing driver 90890-04058 Middle drive bearing installer 40 & 50 mm YM-04058	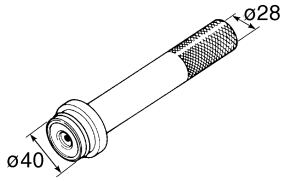	6-9
Pressure gauge 90890-03153 Pressure gauge YU-03153	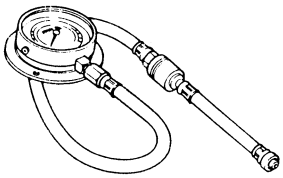	7-11, 7-12
Fuel injector pressure adapter 90890-03210 Fuel injector pressure adapter YU-03210	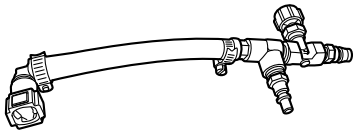	7-11
Fuel pressure adapter 90890-03176 Fuel pressure adapter YM-03176	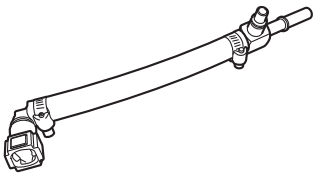	7-12

Tool name/Tool No.	Illustration	Reference pages
Ignition checker 90890-06754 Oppama pet–4000 spark checker YM-34487	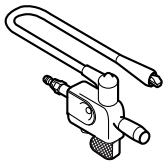	8-125
Test harness– lean angle sensor (6P) 90890-03209 Test harness– lean angle sensor (6P) YU-03209	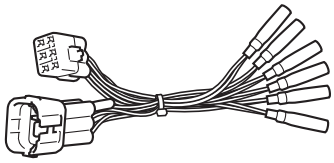	8-125

SPECIFICATIONS

GENERAL SPECIFICATIONS 2-1

ENGINE SPECIFICATIONS 2-2

CHASSIS SPECIFICATIONS 2-7

ELECTRICAL SPECIFICATIONS 2-10

TIGHTENING TORQUES 2-12
- GENERAL TIGHTENING TORQUE SPECIFICATIONS 2-12
- ENGINE TIGHTENING TORQUES 2-13
- CHASSIS TIGHTENING TORQUES 2-18

LUBRICATION POINTS AND LUBRICANT TYPES 2-22
- ENGINE 2-22
- CHASSIS 2-24

LUBRICATION SYSTEM CHART AND DIAGRAMS 2-25
- ENGINE OIL LUBRICATION CHART 2-25
- LUBRICATION DIAGRAMS 2-27

COOLING SYSTEM DIAGRAMS 2-41

CABLE ROUTING 2-43

EAS20013

GENERAL SPECIFICATIONS

Model	
Model	B081 (AUS,NZL) B082 (EUR) B083 (GBR) B084 (RUS)
Dimensions	
Overall length	2090 mm (82.3 in)
Overall width	745 mm (29.3 in)
Overall height	1035 mm (40.7 in)
Seat height	780 mm (30.7 in)
Wheelbase	1380 mm (54.3 in)
Ground clearance	160 mm (6.30 in)
Minimum turning radius	2700 mm (106.3 in)
Weight	
Curb weight	168 kg (370 lb)
Maximum load	160 kg (353 lb)

EAS20014
ENGINE SPECIFICATIONS

Engine	
Engine type	Liquid cooled 4–stroke, DOHC
Displacement	321 cm^3
Cylinder arrangement	Inline 2–cylinder
Bore × stroke	68.0 × 44.1 mm (2.68 × 1.74 in)
Compression ratio	11.2 : 1
Compression pressure	1252–1612 kPa/390 r/min (12.5–16.1 kgf/cm^2/390 r/min, 178.2–229.4 psi/390 r/min)
Starting system	Electric starter
Fuel	
Recommended fuel	Regular unleaded gasoline (Gasohol (E10)acceptable)
Fuel tank capacity	14.0 L (3.70 US gal, 3.08 Imp.gal)
Fuel reserve amount	3.0 L (0.79 US gal, 0.66 Imp.gal)
Engine oil	
Lubrication system	Wet sump
Recommended brand	YAMALUBE
Type	SAE 10W-40
Recommended engine oil grade	API service SG type or higher, JASO standard MA
Engine oil quantity	
Quantity (disassembled)	2.40 L (2.54 US qt, 2.11 Imp.qt)
Without oil filter cartridge replacement	1.80 L (1.90 US qt, 1.58 Imp.qt)
With oil filter cartridge replacement	2.10 L (2.22 US qt, 1.85 Imp.qt)
Oil filter	
Oil filter type	Cartridge
Oil pump	
Oil pump type	Trochoid
Inner-rotor-to-outer-rotor-tip clearance	0.060–0.120 mm (0.0024–0.0047 in)
Limit	0.20 mm (0.0079 in)
Outer-rotor-to-oil-pump-housing clearance	0.09–0.17 mm (0.0035–0.0067 in)
Limit	0.24 mm (0.0094 in)
Oil-pump-housing-to-inner-and-outer-rotor clearance	0.05–0.10 mm (0.0020–0.0039 in)
Limit	0.170 mm (0.0067 in)
Relief valve operating pressure	710.0 kPa (7.10 kgf/cm^2, 103.0 psi)
Cooling system	
Radiator (including all routes)	0.96 L (1.01 US qt, 0.84 Imp.qt)
Coolant reservoir (up to the maximum level mark)	0.25 L (0.26 US qt, 0.22 Imp.qt)
Radiator cap valve opening pressure	93.2–122.6 kPa (0.93–1.23 kgf/cm^2, 13.5–17.8 psi)
Thermostat	
Valve opening temperature	80.5–83.5 °C (176.90–182.30 °F)
Valve full open temperature	95.0 °C (203.00 °F)
Valve lift (full open)	3.0 mm (0.12 in)

Radiator core	
Width	145.8 mm (5.74 in)
Height	270.0 mm (10.63 in)
Depth	24.0 mm (0.94 in)
Water pump	
Water pump type	Single suction centrifugal pump
Reduction ratio	41/23 (1.783)
Spark plug(s)	
Manufacturer/model	NGK/CR8E
Spark plug gap	0.7–0.8 mm (0.028–0.031 in)
Cylinder head	
Combustion chamber volume	10.80–11.60 cm^3 (0.66–0.71 cu.in)
Warpage limit	0.10 mm (0.0039 in)
Camshaft	
Drive system	Chain drive (right)
Camshaft cap inside diameter	22.500–22.521 mm (0.8858–0.8867 in)
Camshaft journal diameter	22.459–22.472 mm (0.8842–0.8847 in)
Camshaft-journal-to-camshaft-cap clearance	0.028–0.062 mm (0.0011–0.0024 in)
Camshaft lobe dimensions	
Lobe height (Intake)	32.650–32.750 mm (1.2854–1.2894 in)
Limit	32.550 mm (1.2815 in)
Base circle diameter (Intake)	24.972–25.072 mm (0.9831–0.9871 in)
Limit	24.872 mm (0.9792 in)
Lobe height (Exhaust)	30.750–30.850 mm (1.2106–1.2146 in)
Limit	30.650 mm (1.2067 in)
Base circle diameter (Exhaust)	25.027–25.127 mm (0.9853–0.9893 in)
Limit	24.927 mm (0.9814 in)
Camshaft runout limit	0.030 mm (0.0012 in)
Valve, valve seat, valve guide	
Valve clearance (cold)	
Intake	0.11–0.18 mm (0.0043–0.0071 in)
Exhaust	0.21–0.30 mm (0.0083–0.0118 in)
Valve dimensions	
Valve head diameter (intake)	25.90–26.10 mm (1.0197–1.0276 in)
Valve head diameter (exhaust)	22.40–22.60 mm (0.8819–0.8898 in)
Valve seat contact width (intake)	0.90–1.20 mm (0.0354–0.0472 in)
Valve seat contact width (exhaust)	0.90–1.20 mm (0.0354–0.0472 in)
Valve stem diameter (intake)	4.475–4.490 mm (0.1762–0.1768 in)
Limit	4.445 mm (0.1750 in)
Valve stem diameter (exhaust)	4.460–4.475 mm (0.1756–0.1762 in)
Limit	4.430 mm (0.1744 in)
Valve guide inside diameter (intake)	4.500–4.512 mm (0.1772–0.1776 in)
Limit	4.550 mm (0.1791 in)
Valve guide inside diameter (exhaust)	4.500–4.512 mm (0.1772–0.1776 in)
Limit	4.550 mm (0.1791 in)
Valve-stem-to-valve-guide clearance (intake)	0.010–0.037 mm (0.0004–0.0015 in)
Limit	0.080 mm (0.0032 in)
Valve-stem-to-valve-guide clearance (exhaust)	0.025–0.052 mm (0.0010–0.0020 in)
Limit	0.100 mm (0.0039 in)

Valve stem runout	0.010 mm (0.0004 in)
Valve spring	
Free length (intake)	38.21 mm (1.50 in)
Limit	36.30 mm (1.43 in)
Free length (exhaust)	38.21 mm (1.50 in)
Limit	36.30 mm (1.43 in)
Installed length (intake)	32.00 mm (1.26 in)
Installed length (exhaust)	32.00 mm (1.26 in)
Spring rate K1 (intake)	27.64 N/mm (2.82 kgf/mm, 157.82 lbf/in)
Spring rate K2 (intake)	38.73 N/mm (3.95 kgf/mm, 221.15 lbf/in)
Spring rate K1 (exhaust)	27.64 N/mm (2.82 kgf/mm, 157.82 lbf/in)
Spring rate K2 (exhaust)	38.73 N/mm (3.95 kgf/mm, 221.15 lbf/in)
Installed compression spring force (intake)	159.60–183.60 N (16.27–18.72 kgf, 35.88–41.27 lbf)
Installed compression spring force (exhaust)	159.60–183.60 N (16.27–18.72 kgf, 35.88–41.27 lbf)
Spring tilt (intake)	1.7 mm (0.07 in)
Spring tilt (exhaust)	1.7 mm (0.07 in)
Winding direction (intake)	Clockwise
Winding direction (exhaust)	Clockwise
Cylinder	
Bore	68.000–68.010 mm (2.6772–2.6776 in)
Taper limit	0.050 mm (0.0020 in)
Out of round limit	0.050 mm (0.0020 in)
Piston	
Piston-to-cylinder clearance	0.015–0.048 mm (0.0006–0.0019 in)
Diameter	67.962–67.985 mm (2.6757–2.6766 in)
Measuring point (from piston skirt bottom)	7.0 mm (0.28 in)
Offset 0.25 mm	(0.0098 in)
Offset direction	Intake side
Piston pin bore inside diameter	15.002–15.013 mm (0.5906–0.5911 in)
Limit	15.043 mm (0.5922 in)
Piston pin outside diameter	14.995–15.000 mm (0.5904–0.5906 in)
Limit	14.975 mm (0.5896 in)
Piston-pin-to-piston-pin-bore clearance	0.002–0.018 mm (0.0001–0.0007 in)
Piston ring	
Top ring	
Ring type	Barrel
End gap (installed)	0.15–0.25 mm (0.0059–0.0098 in)
Limit	0.50 mm (0.0197 in)
Ring side clearance	0.030–0.065 mm (0.0012–0.0026 in)
Limit	0.115 mm (0.0045 in)
2nd ring	
Ring type	Taper
End gap (installed)	0.35–0.50 mm (0.0138–0.0197 in)
Limit	0.85 mm (0.0335 in)
Ring side clearance	0.020–0.055 mm (0.0008–0.0022 in)
Limit	0.115 mm (0.0045 in)

Oil ring	
End gap (installed)	0.10–0.35 mm (0.0039–0.0138 in)
Connecting rod	
Oil clearance	0.036–0.060 mm (0.0014–0.0024 in)
Bearing color code	1. Blue 2. Black 3. Brown 4. Green
Crankshaft	
Runout limit	0.030 mm (0.0012 in)
Journal oil clearance	0.021–0.045 mm (0.0008–0.0018 in)
Bearing color code	1.Blue 2.Black 3.Brown 4.Green 5.Yellow
Balancer	
Balancer shaft journal to balancer shaft bearing clearance	0.021–0.045 mm (0.0008–0.0018 in)
Clutch	
Clutch type	Wet, multiple-disc
Clutch release method	Outer pull, rack and pinion pull
Clutch lever free play	10.0–15.0 mm (0.39–0.59 in)
Friction plate thickness	2.92–3.08 mm (0.115–0.121 in)
Wear limit	2.82 mm (0.111 in)
Plate quantity	7 pcs
Clutch plate thickness	1.50–1.70 mm (0.059–0.067 in)
Plate quantity	6 pcs
Warpage limit	0.10 mm (0.004 in)
Clutch spring free length	47.81 mm (1.88 in)
Limit	45.42 mm (1.79 in)
Spring quantity	4 pcs
Transmission	
Transmission type	Constant mesh 6-speed
Primary reduction ratio	3.043 (70/23)
Final drive	Chain
Secondary reduction ratio	3.071 (43/14)
Operation	Left foot operation
Gear ratio	
1st	2.500 (35/14)
2nd	1.824 (31/17)
3rd	1.348 (31/23)
4th	1.087 (25/23)
5th	0.920 (23/25)
6th	0.800 (24/30)
Main axle runout limit	0.08 mm (0.0032 in)
Drive axle runout limit	0.08 mm (0.0032 in)
Shifting mechanism	
Shift fork thickness	5.76–5.89 mm (0.2268–0.2319 in)
Air filter	
Air filter element	Oil-coated paper element

Fuel pump	
Pump type	Electrical
Maximum consumption amperage	1.7 A
Fuel injector	
Model/quantity	2370/2
Throttle body	
Type/quantity	SE 32EHDW-2B/1
ID mark	2MS2 00
Throttle position sensor	
Output voltage (at idle)	0.63–0.73 V
Fuel injection sensor	
Crankshaft position sensor resistance	192–288 Ω
Intake air pressure sensor output voltage	3.88–4.12 V at 101.3 kPa (3.88–4.12 V at 1.01 kgf/cm², 3.88–4.12 V at 14.7 psi)
Intake air temperature sensor resistance	5700–6300 Ω at 0 °C (5700–6300 Ω at 32 °F)
Coolant temperature sensor resistance	2513–2777 Ω at 20 °C (2513–2777 Ω at 68 °F)
Coolant temperature sensor resistance	210–221 Ω at 100 °C (210–221 Ω at 212 °F)
Idling condition	
Fuel line pressure at idling	220–300 kPa (2.2–3.0 kgf/cm^2, 31.9–43.5 psi)
Engine idling speed	1300–1500 r/min
CO% (Muffler tail pipe)	0.0–2.0 %
Intake vacuum	52.0–58.0 kPa (390–435 mmHg, 15.4–17.1 inHg)
Water temperature	95.0–105.0 °C (203.00–221.00 °F)
Throttle grip free play	3.0–5.0 mm (0.12–0.20 in)

EAS20015

CHASSIS SPECIFICATIONS

Chassis	
Frame type	Diamond
Caster angle	25.0 °
Trail	95 mm (3.7 in)
Front wheel	
Wheel type	Cast wheel
Rim size	17M/C x MT2.75
Rim material	Aluminum
Wheel travel	130 mm (5.1 in)
Radial wheel runout limit	1.0 mm (0.04 in)
Lateral wheel runout limit	0.5 mm (0.02 in)
Rear wheel	
Wheel type	Cast wheel
Rim size	17M/C x MT4.00
Rim material	Aluminum
Wheel travel	125 mm (4.9 in)
Radial wheel runout limit	1.0 mm (0.04 in)
Lateral wheel runout limit	0.5 mm (0.02 in)
Front tire	
Type	Tubeless
Size	110/70-17M/C (54H)
Manufacturer/model	MICHELIN/PILOT STREET
Wear limit (front)	1.6 mm (0.06 in) (EUR,RUS) 1.5 mm (0.06 in) (AUS,NZL)
Rear tire	
Type	Tubeless
Size	140/70-17M/C (66H)
Manufacturer/model	MICHELIN/PILOT STREET
Wear limit (rear)	1.6 mm (0.06 in) (EUR,RUS) 1.5 mm (0.06 in) (AUS,NZL)
Tire air pressure (measured on cold tires)	
Front (1 person)	200 kPa (2.00 kgf/cm², 29 psi)
Rear (1 person)	250 kPa (2.50 kgf/cm², 36 psi)
Front (2 persons)	200 kPa (2.00 kgf/cm², 29 psi)
Rear (2 persons)	250 kPa (2.50 kgf/cm², 36 psi)
Front brake	
Type	Single disc brake
Operation	Right hand operation
Front disc brake	
Disc outside diameter × thickness	298.0 × 4.5 mm (11.73 × 0.18 in)
Brake disc thickness limit	4.0 mm (0.16 in)
Brake disc runout limit (as measured on wheel)	0.15 mm (0.0059 in)
Brake pad lining thickness (inner)	5.3 mm (0.21 in)
Limit	0.8 mm (0.03 in)

Brake pad lining thickness (outer)	5.3 mm (0.21 in)
Limit	0.8 mm (0.03 in)
Master cylinder inside diameter	11.00 mm (0.43 in)
Caliper cylinder inside diameter	26.99 mm (1.06 in)
Caliper cylinder inside diameter	26.99 mm (1.06 in)
Specified brake fluid	DOT 4
Rear brake	
Type	Single disc brake
Operation	Right foot operation
Rear disc brake	
Disc outside diameter × thickness	220.0 × 4.5 mm (8.66 × 0.18 in)
Brake disc thickness limit	4.0 mm (0.16 in)
Brake disc runout limit (as measured on wheel)	0.15 mm (0.0059 in)
Brake pad lining thickness (inner)	7.7 mm (0.30 in)
Limit	0.8 mm (0.03 in)
Brake pad lining thickness (outer)	7.7 mm (0.30 in)
Limit	0.8 mm (0.03 in)
Master cylinder inside diameter	12.7 mm (0.50 in)
Caliper cylinder inside diameter	33.34 mm (1.31 in)
Specified brake fluid	DOT 4
Steering	
Center to lock angle (left)	34.0 °
Center to lock angle (right)	34.0 °
Front suspension	
Type	Telescopic fork
Spring/shock absorber type	Coil spring/oil damper
Front fork travel	130.0 mm (5.12 in)
Fork spring free length	297.8 mm (11.72 in)
Limit	294.4 mm (11.59 in)
Collar length	229.0 mm (9.02 in)
Spring rate K1	6.45 N/mm (0.66 kgf/mm, 36.83 lbf/in)
Spring stroke K1	0.0–130.0 mm (0.00–5.12 in)
Inner tube outer diameter	41.0 mm (1.61 in)
Inner tube bending limit	0.2 mm (0.01 in)
Recommended oil	Fork oil 10W or equivalent
Quantity	487.0 cm^3 (16.47 US oz, 17.18 Imp.oz)
Level	121.0 mm (4.76 in)
Rear suspension	
Type	Swingarm
Spring/shock absorber type	Coil spring/oil damper
Rear shock absorber assembly travel	45.0 mm (1.77 in)
Spring installed length	157.0 mm (6.18 in)
Spring rate K1	161.60 N/mm (16.48 kgf/mm, 922.74 lbf/in)
Spring stroke K1	0.0–45.0 mm (0.0–1.77 in)
Spring preload adjusting positions	
Minimum	1
Standard	3
Maximum	7

Drive chain	
Size/manufacturer	520VF/DAIDO
Number of links	112
15-link length limit	239.3 mm (9.42 in)
Drive chain slack	35.0–45.0 mm (1.38–1.77 in)
Drive chain slack (fully extension of rear suspension)	40.0–50.0 mm (1.57–1.97 in)

EAS20016

ELECTRICAL SPECIFICATIONS

Voltage	
System voltage	12 V
Ignition system	
Ignition system	TCI
Ignition timing (B.T.D.C.)	5.0 °/1400 r/min
Engine control unit	
Model/manufacturer	TBDFR0/DENSO
Ignition coil	
Minimum ignition spark gap	6.0 mm (0.24 in)
Primary coil resistance	2.16–2.64 Ω
Secondary coil resistance	8.64–12.96 kΩ
Lean angle sensor output voltage	
Less than 45°	0.4-1.4 V
More than 45°	3.7-4.4 V
AC magneto	
Standard output	14.0 V, 298 W at 5000 r/min
Stator coil resistance	0.216–0.324 Ω (W-W)
Rectifier/regulator	
Regulator type	Semi conductor-short circuit
Regulated voltage (DC)	14.1–14.9 V
Rectifier capacity	35.0 A
Battery	
Model	GTZ8V
Voltage, capacity	12 V, 7.0 Ah
Specific gravity	1.350
Manufacturer	GS
Ten hour rate charging current	0.70 A
Headlight	
Bulb type	Halogen bulb
Bulb voltage, wattage × quantity	
Headlight	12 V, 60.0 W/55.0 W × 1
Auxiliary light	LED
Brake/tail light	LED
Front turn signal light	12 V, 10.0 W × 2
Rear turn signal light	12 V, 10.0 W × 2
License plate light	12 V, 5.0 W × 1
Meter lighting	LED
Indicator light	
Neutral indicator light	LED
Turn signal indicator light	LED

Oil pressure warning light	LED
High beam indicator light	LED
Engine trouble warning light	LED
Shift timing indicator light	LED
ABS warning light	LED
Starter motor	
Power output	0.40 kW
Armature coil resistance	0.0630–0.0770 Ω
Brush overall length	7.0 mm (0.28 in)
Limit	3.00 mm (0.12 in)
Brush spring force	6.08–9.12 N (620–930 gf, 21.89–32.83 oz)
Mica undercut (depth)	1.50 mm (0.06 in)
Starter relay	
Amperage	150.0 A
Horn	
Horn type	Plane
Quantity	1
Turn signal relay	
Built-in, self-canceling device	No
Fuel sender unit	
Sender unit resistance (full)	10.0–14.0 Ω
Sender unit resistance (empty)	267.0–273.0 Ω
Fuse	
Main fuse	30.0 A
Headlight fuse	15.0 A
Signaling system fuse	7.5 A
Ignition fuse	15.0 A
Radiator fan motor fuse	7.5 A
ABS motor fuse	30.0 A
ABS solenoid fuse	15.0 A
ABS control unit fuse	7.5 A
Backup fuse	7.5 A
Spare fuse	30.0 A
Spare fuse	15.0 A
Spare fuse	7.5 A

EAS20017
TIGHTENING TORQUES

EAS30015
GENERAL TIGHTENING TORQUE SPECIFICATIONS

This chart specifies tightening torques for standard fasteners with a standard ISO thread pitch. Tightening torque specifications for special components or assemblies are provided for each chapter of this manual. To avoid warpage, tighten multi-fastener assemblies in a crisscross pattern and progressive stages until the specified tightening torque is reached. Unless otherwise specified, tightening torque specifications require clean, dry threads. Components should be at room temperature.

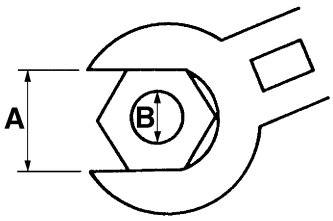

A. Distance between flats
B. Outside thread diameter

A (nut)	B (bolt)	General tightening torques		
		Nm	m·kgf	ft·lbf
10 mm	6 mm	6	0.6	4.3
12 mm	8 mm	15	1.5	11
14 mm	10 mm	30	3.0	22
17 mm	12 mm	55	5.5	40
19 mm	14 mm	85	8.5	61
22 mm	16 mm	130	13.0	94

EAS30016
ENGINE TIGHTENING TORQUES

Item	Thread size	Q'ty	Tightening torque	Remarks
Air filter case joint clamp screw	M5	2	2.5 Nm (0.25 m·kgf, 1.8 ft·lbf)	
Air filter case bolt	M6	2	7 Nm (0.7 m·kgf, 5.1 ft·lbf)	
Air filter case side cover screw (left)	M5	3	2.5 Nm (0.25 m·kgf, 1.8 ft·lbf)	
Air filter case side cover screw (right)	M5	8	1.3 Nm (0.13 m·kgf, 0.94 ft·lbf)	
Spark plug	M10	2	13 Nm (1.3 m·kgf, 9.4 ft·lbf)	
Flap stay bolt	M6	2	7 Nm (0.7 m·kgf, 5.1 ft·lbf)	
O_2 sensor	M12	1	25 Nm (2.5 m·kgf, 18 ft·lbf)	
Muffler protector (outer)	M6	1	8 Nm (0.8 m·kgf, 5.8 ft·lbf)	LT
Muffler protector (inner)	M6	2	8 Nm (0.8 m·kgf, 5.8 ft·lbf)	LT
Exhaust pipe protector bracket bolt	M6	2	10 Nm (1.0 m·kgf, 7.2 ft·lbf)	LT
Exhaust pipe nut	M8	4	15 Nm (1.5 m·kgf, 11 ft·lbf)	
Exhaust pipe bolt	M8	1	20 Nm (2.0 m·kgf, 14 ft·lbf)	
Muffler assembly bolt	M8	1	20 Nm (2.0 m·kgf, 14 ft·lbf)	
Exhaust pipe joint bolt	M8	1	20 Nm (2.0 m·kgf, 14 ft·lbf)	
Exhaust pipe protector bolt	M6	3	8 Nm (0.8 m·kgf, 5.8 ft·lbf)	LT
Engine ground lead bolt	M6	1	10 Nm (1.0 m·kgf, 7.2 ft·lbf)	
Camshaft cap bolt	M6	12	10 Nm (1.0 m·kgf, 7.2 ft·lbf)	E
Camshaft sprocket bolt	M7	4	20 Nm (2.0 m·kgf, 14 ft·lbf)	
Timing chain tensioner bolt	M6	2	10 Nm (1.0 m·kgf, 7.2 ft·lbf)	
Timing chain tensioner cap bolt	M6	1	7 Nm (0.7 m·kgf, 5.1 ft·lbf)	
Timing mark accessing bolt	M8	1	10 Nm (1.0 m·kgf, 7.2 ft·lbf)	
Crankshaft end cover	M32	1	2.0 Nm (0.20 m·kgf, 1.4 ft·lbf)	
Cylinder head cover bolt	M6	4	10 Nm (1.0 m·kgf, 7.2 ft·lbf)	
Coolant temperature sensor	M10	1	15 Nm (1.5 m·kgf, 11 ft·lbf)	
Timing chain bolt (right side of cylinder head)	M6	1	10 Nm (1.0 m·kgf, 7.2 ft·lbf)	
Engine oil check bolt	M8	1	15 Nm (1.5 m·kgf, 11 ft·lbf)	
Cylinder head bolt	M10	6	See TIP.	M
Cylinder head bolt	M6	2	See TIP.	
Starter clutch bolt	M6	3	14 Nm (1.4 m·kgf, 10 ft·lbf)	LT
Generator rotor bolt	M10	1	60 Nm (6.0 m·kgf, 43 ft·lbf)	M
Generator cover bolt	M6	9	10 Nm (1.0 m·kgf, 7.2 ft·lbf)	
Stator coil bolt	M6	3	10 Nm (1.0 m·kgf, 7.2 ft·lbf)	LT
Crankshaft position sensor bolt	M5	2	7 Nm (0.7 m·kgf, 5.1 ft·lbf)	LT
Starter motor lead screw	M5	1	3.5 Nm (0.35 m·kgf, 2.5 ft·lbf)	
Starter motor bolt	M6	2	10 Nm (1.0 m·kgf, 7.2 ft·lbf)	
Starter motor front cover bolt	M4	2	3.5 Nm (0.35 m·kgf, 2.5 ft·lbf)	
Brush holder screw	M4	2	1.5 Nm (0.15 m·kgf, 1.1 ft·lbf)	
Clutch boss nut	M18	1	100 Nm (10 m·kgf, 72 ft·lbf)	E

Item	Thread size	Q'ty	Tightening torque	Remarks
Clutch spring bolt	M6	4	10 Nm (1.0 m·kgf, 7.2 ft·lbf)	
Clutch cover bolt	M6	7	10 Nm (1.0 m·kgf, 7.2 ft·lbf)	
Clutch cable holder bolt	M6	2	10 Nm (1.0 m·kgf, 7.2 ft·lbf)	
Shift shaft spring stopper	M8	1	22 Nm (2.2 m·kgf, 16 ft·lbf)	
Oil pump cover screw	M4	1	2.0 Nm (0.20 m·kgf, 1.4 ft·lbf)	
Oil pump bolt	M6	4	10 Nm (1.0 m·kgf, 7.2 ft·lbf)	
Oil pan bolt	M6	11	10 Nm (1.0 m·kgf, 7.2 ft·lbf)	
Engine oil drain bolt	M12	1	20 Nm (2.0 m·kgf, 14 ft·lbf)	
Crankcase bolt	M8	6	See TIP.	
Crankcase bolt	M8	2	See TIP.	
Crankcase bolt	M6	14	See TIP.	
Timing chain guide bolt (intake side bolt)	M6	2	10 Nm (1.0 m·kgf, 7.2 ft·lbf)	
Timing chain guide bolt (lower side bolt)	M6	2	10 Nm (1.0 m·kgf, 7.2 ft·lbf)	
Primary drive gear bolt	M10	1	60 Nm (6.0 m·kgf, 43 ft·lbf)	
Oil pressure switch	PT 1/8	1	15 Nm (1.5 m·kgf, 11 ft·lbf)	
Oil pressure switch lead bolt	M4	1	1.8 Nm (0.18 m·kgf, 1.3 ft·lbf)	
Gear position switch screw	M5	2	3.5 Nm (0.35 m·kgf, 2.5 ft·lbf)	
Oil filter cartridge	M20	1	17 Nm (1.7 m·kgf, 12 ft·lbf)	
Oil filter cartridge union bolt	M20	1	70 Nm (7.0 m·kgf, 51 ft·lbf)	
Crankcase breather cover bolt	M6	8	10 Nm (1.0 m·kgf, 7.2 ft·lbf)	
Connecting rod nut	M6	4	See TIP.	
Balancer driven gear bolt	M8	1	35 Nm (3.5 m·kgf, 25 ft·lbf)	
Shift fork guide bar retainer bolt	M6	2	10 Nm (1.0 m·kgf, 7.2 ft·lbf)	
Shift drum segment screw	M6	1	12 Nm (1.2 m·kgf, 8.7 ft·lbf)	
Radiator cap screw	M3	1	1.5 Nm (0.15 m·kgf, 1.1 ft·lbf)	
Radiator side cover bolt	M6	4	9 Nm (0.9 m·kgf, 6.5 ft·lbf)	
Radiator cover bolt	M6	5	7 Nm (0.7 m·kgf, 5.1 ft·lbf)	
Radiator side cover bracket screw	M5	2	1.8 Nm (0.18 m·kgf, 1.3 ft·lbf)	
Radiator bolt	M6	2	9 Nm (0.9 m·kgf, 6.5 ft·lbf)	
Radiator fan cover bolt	M6	3	8 Nm (0.8 m·kgf, 5.8 ft·lbf)	
Coolant reservoir cover bolt	M5	2	1.5 Nm (0.15 m·kgf, 1.1 ft·lbf)	
Coolant reservoir bolt	M6	1	7 Nm (0.7 m·kgf, 5.1 ft·lbf)	
Radiator outlet hose clamp screw	M5	1	2.0 Nm (0.20 m·kgf, 1.4 ft·lbf)	
Radiator inlet hose clamp screw	M5	1	2.0 Nm (0.20 m·kgf, 1.4 ft·lbf)	
Thermostat cover bolt	M6	2	10 Nm (1.0 m·kgf, 7.2 ft·lbf)	
Water pump housing bolt	M6	3	10 Nm (1.0 m·kgf, 7.2 ft·lbf)	
Coolant drain bolt	M6	1	10 Nm (1.0 m·kgf, 7.2 ft·lbf)	
Impeller shaft retaining plate bolt	M6	2	10 Nm (1.0 m·kgf, 7.2 ft·lbf)	
Throttle body joint bolt	M6	3	10 Nm (1.0 m·kgf, 7.2 ft·lbf)	

Item	Thread size	Q'ty	Tightening torque	Remarks
ISC (Idle Speed Control) unit plate screw	M6	1	5 Nm (0.5 m·kgf, 3.6 ft·lbf)	
Fuel rail bolt	M5	2	3.5 Nm (0.35 m·kgf, 2.5 ft·lbf)	
Throttle body joint clamp screw	M5	2	2.5 Nm (0.25 m·kgf, 1.8 ft·lbf)	
Reed valve cover bolt	M6	2	10 Nm (1.0 m·kgf, 7.2 ft·lbf)	

TIP

Cylinder head bolt

Tighten the cylinder head bolts "1"–"8" in the proper tightening sequence as follows:

1. Lubricate the cylinder head bolts "1"–"6" threads and mating surface with molybdenum disulfide grease.
2. Tighten the cylinder head bolts "1"–"6" to 10 Nm (1.0 m·kgf, 7.2 ft·lbf).
3. Tighten the cylinder head bolts "1"–"6" to 30 Nm (3.0 m·kgf, 22 ft·lbf).
4. Loosen and retighten each cylinder head bolt "1"–"6" with the following steps (after loosening a bolt, retighten it before loosening the next bolt).
   - Loosen the cylinder head bolt.
   - Tighten the cylinder head bolt to 12 Nm (1.2 m·kgf, 8.7 ft·lbf).
   - Tighten the cylinder head bolt to reach the specified angle 115–125°.
5. Tighten the cylinder head bolts "7" and "8" to 10 Nm (1.0 m·kgf, 7.2 ft·lbf).

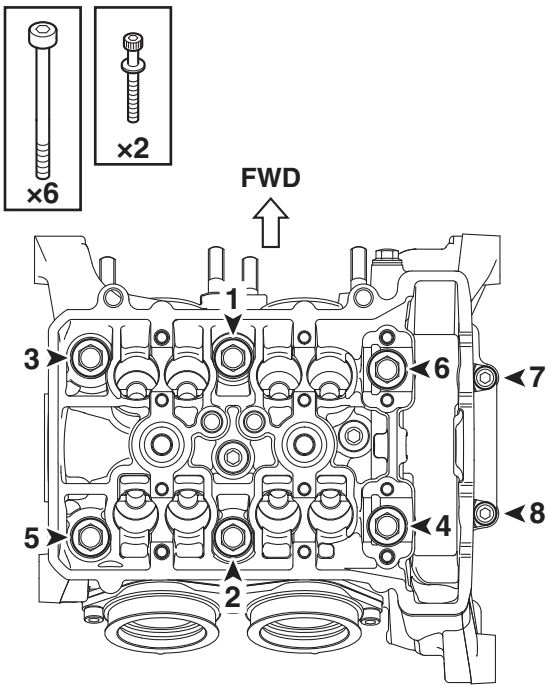

TIP

Crankcase bolt

Tighten the crankcase bolts "1"–"21" in the proper tightening sequence as follows:

1. Lubricate the crankcase bolts "1"–"15" and "17"–"21" threads, mating surfaces with the engine oil.
2. Lubricate the mating surface of the bolt "16" with engine oil and apply Yamaha bond No. 1215 to the bolt threads.
3. Tighten the crankcase bolts "1"–"6" to 20 Nm (2.0 m·kgf, 14 ft·lbf).
4. Loosen and retighten the crankcase bolts "1"–"6" to 24 Nm (2.4 m·kgf, 17 ft·lbf) in the proper tightening sequence (after loosening a bolt, retighten it before loosening the next bolt).

5. Tighten the crankcase bolts “7”–“8” to 20 Nm (2.0 m·kgf, 14 ft·lbf).
6. Loosen and retighten the crankcase bolts “7”–“8” to 26 Nm (2.6 m·kgf, 19 ft·lbf) in the proper tightening sequence (after loosening a bolt, retighten it before loosening the next bolt).
7. Tighten the crankcase bolts “9”–“21” to 10 Nm (1.0 m·kgf, 7.2 ft·lbf) in the proper tightening sequence.

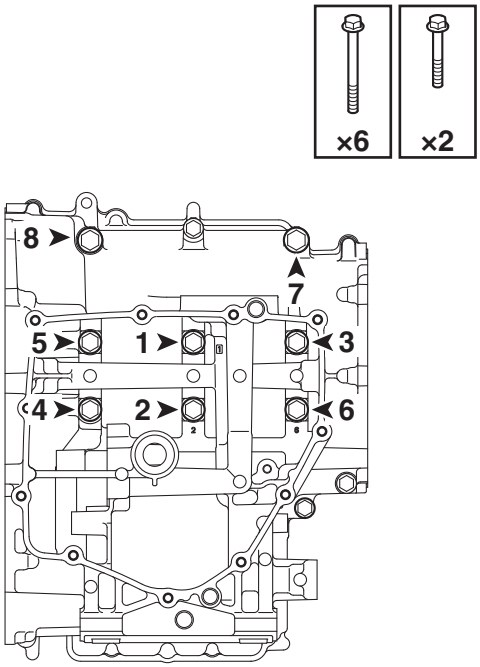

A

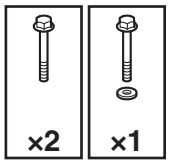

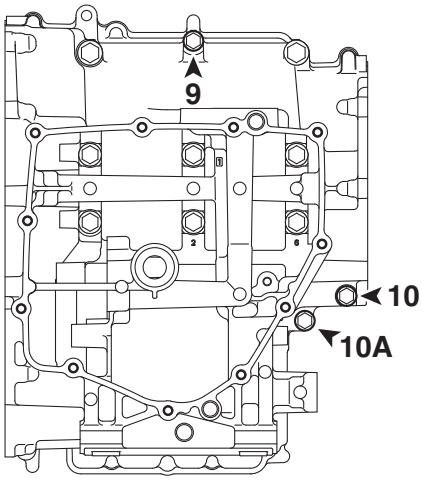

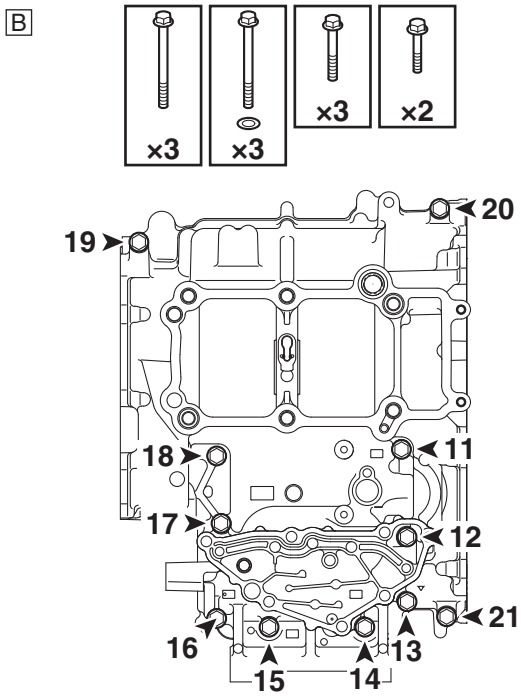

A. Lower crankcase
B. Upper crankcase

TIP

Connecting rod bolt

1. Lubricate the connecting rod bolts threads and connecting rod nuts mating surface with molybdenum disulfide oil.
2. Tighten the connecting rod bolts to 15 Nm (1.5 m·kgf, 11 ft·lbf), and then tighten them further to reach the specified angle 145–155°.

EAS30017
CHASSIS TIGHTENING TORQUES

Item	Thread size	Q'ty	Tightening torque	Remarks
Engine mounting nut (rear upper side)	M10	1	68 Nm (6.8 m·kgf, 49 ft·lbf)	
Sidestand bracket bolt	M10	2	66 Nm (6.6 m·kgf, 48 ft·lbf)	
Engine mounting nut (rear lower side)	M10	1	68 Nm (6.8 m·kgf, 49 ft·lbf)	
Engine mounting bolt (right front side)	M10	1	68 Nm (6.8 m·kgf, 49 ft·lbf)	
Engine mounting bolt (left front side)	M10	1	68 Nm (6.8 m·kgf, 49 ft·lbf)	
Engine bracket bolt (right)	M10	2	68 Nm (6.8 m·kgf, 49 ft·lbf)	
Engine bracket bolt (left)	M10	2	68 Nm (6.8 m·kgf, 49 ft·lbf)	
Engine mounting bolt (right upper side)	M10	1	68 Nm (6.8 m·kgf, 49 ft·lbf)	
Engine mounting bolt (left upper side)	M10	1	68 Nm (6.8 m·kgf, 49 ft·lbf)	
Rider seat bolt	M6	2	7 Nm (0.7 m·kgf, 5.1 ft·lbf)	
Center cover screw	M5	2	1.8 Nm (0.18 m·kgf, 1.3 ft·lbf)	
Passenger seat bracket nut	M6	1	7 Nm (0.7 m·kgf, 5.1 ft·lbf)	
Passenger seat band nut	M6	2	7 Nm (0.7 m·kgf, 5.1 ft·lbf)	
Side panel bolt	M5	4	1.8 Nm (0.18 m·kgf, 1.3 ft·lbf)	
Side panel screw	M5	4	1.8 Nm (0.18 m·kgf, 1.3 ft·lbf)	
Grab bar bracket bolt	M8	4	21 Nm (2.1 m·kgf, 15 ft·lbf)	
Grab bar bolt	M8	4	21 Nm (2.1 m·kgf, 15 ft·lbf)	
Upper tail panel screw	M5	2	1.8 Nm (0.18 m·kgf, 1.3 ft·lbf)	
Rear side cowling bolt	M6	2	7 Nm (0.7 m·kgf, 5.1 ft·lbf)	
Seat lock nut	M5	2	7 Nm (0.7 m·kgf, 5.1 ft·lbf)	
Rear side cowling screw	M5	5	1.8 Nm (0.18 m·kgf, 1.3 ft·lbf)	
Seat lock key cylinder screw	M5	2	1.8 Nm (0.18 m·kgf, 1.3 ft·lbf)	
Lean angle sensor screw	M4	2	1.0 Nm (0.10 m·kgf, 0.72 ft·lbf)	
Rectifier/regulator bolt	M6	2	7 Nm (0.7 m·kgf, 5.1 ft·lbf)	
Air scoop bolt	M6	2	7 Nm (0.7 m·kgf, 5.1 ft·lbf)	
Fuel tank cover bolt (rear side)	M5	4	5 Nm (0.5 m·kgf, 3.6 ft·lbf)	
Fuel tank cover bolt (front side)	M6	1	7 Nm (0.7 m·kgf, 5.1 ft·lbf)	
Fuel tank cover screw	M5	6	1.8 Nm (0.18 m·kgf, 1.3 ft·lbf)	
Fuel tank side cover screw	M5	4	1.8 Nm (0.18 m·kgf, 1.3 ft·lbf)	
Bottom cowling bolt	M6	4	4.5 Nm (0.45 m·kgf, 3.3 ft·lbf)	
Bottom cowling bracket bolt (rear side)	M6	1	7 Nm (0.7 m·kgf, 5.1 ft·lbf)	
Rearview mirror locknut	M10	2	17 Nm (1.7 m·kgf, 12 ft·lbf)	
Headlight top cover bolt	M6	2	7 Nm (0.7 m·kgf, 5.1 ft·lbf)	
Meter assembly bracket bolt	M6	3	7 Nm (0.7 m·kgf, 5.1 ft·lbf)	
Meter assembly screw	M5	3	1.3 Nm (0.13 m·kgf, 0.94 ft·lbf)	
Meter support bolt	M6	2	7 Nm (0.7 m·kgf, 5.1 ft·lbf)	

Item	Thread size	Q'ty	Tightening torque	Remarks
Headlight assembly bolt	M6	2	7 Nm (0.7 m·kgf, 5.1 ft·lbf)	
Headlight side cover bolt (upper)	M6	2	7 Nm (0.7 m·kgf, 5.1 ft·lbf)	
Headlight side cover bolt (lower)	M6	2	7 Nm (0.7 m·kgf, 5.1 ft·lbf)	
Headlight bracket screw	M5	2	1.5 Nm (0.15 m·kgf, 1.1 ft·lbf)	
Front brake hose holder bolt	M6	1	7 Nm (0.7 m·kgf, 5.1 ft·lbf)	
Front brake caliper bolt	M10	2	35 Nm (3.5 m·kgf, 25 ft·lbf)	
Front wheel axle nut	M14	1	52 Nm (5.2 m·kgf, 38 ft·lbf)	LS
Front brake disc bolt	M8	5	23 Nm (2.3 m·kgf, 17 ft·lbf)	LT
Front wheel sensor rotor bolt	M5	3	8 Nm (0.8 m·kgf, 5.8 ft·lbf)	LT
Front wheel sensor bolt	M6	1	7 Nm (0.7 m·kgf, 5.1 ft·lbf)	LT
Rear brake caliper bolt	M8	1	23 Nm (2.3 m·kgf, 17 ft·lbf)	
Drive chain puller locknut	M8	2	16 Nm (1.6 m·kgf, 12 ft·lbf)	
Drive chain puller adjusting nut	M8	2	1.5 Nm (0.15 m·kgf, 1.1 ft·lbf)	
Rear wheel axle nut	M16	1	57 Nm (5.7 m·kgf, 41 ft·lbf)	LS
Rear brake caliper bolt	M12	1	31 Nm (3.1 m·kgf, 22 ft·lbf)	
Rear wheel sprocket nut	M10	6	68 Nm (6.8 m·kgf, 49 ft·lbf)	
Rear wheel sprocket stud bolt	M10	6	27 Nm (2.7 m·kgf, 20 ft·lbf)	LT
Rear brake disc bolt	M8	3	23 Nm (2.3 m·kgf, 17 ft·lbf)	LT
Rear wheel sensor rotor bolt	M5	3	8 Nm (0.8 m·kgf, 5.8 ft·lbf)	LT
Rear wheel sensor bolt	M6	1	7 Nm (0.7 m·kgf, 5.1 ft·lbf)	LT
Brake caliper bleed screw	M7	2	6 Nm (0.6 m·kgf, 4.3 ft·lbf)	
Front brake master cylinder reservoir cap screw	M4	2	1.5 Nm (0.15 m·kgf, 1.1 ft·lbf)	
Front brake lever pivot bolt	M6	1	6 Nm (0.6 m·kgf, 4.3 ft·lbf)	
Front brake lever pivot nut	M6	1	6 Nm (0.6 m·kgf, 4.3 ft·lbf)	
Front brake light switch screw	M4	1	1.1 Nm (0.11 m·kgf, 0.80 ft·lbf)	LT
Front brake hose union bolt (master cylinder side)	M10	1	29 Nm (2.9 m·kgf, 21 ft·lbf)	
Front brake hose union bolt (brake caliper side)	M10	1	29 Nm (2.9 m·kgf, 21 ft·lbf)	
Front brake hose union bolt (hydraulic unit side)	M10	2	29 Nm (2.9 m·kgf, 21 ft·lbf)	
Front brake master cylinder holder bolt	M6	2	10 Nm (1.0 m·kgf, 7.2 ft·lbf)	
Brake hose joint bolt	M6	4	7 Nm (0.7 m·kgf, 5.1 ft·lbf)	
Front brake hose union bolt (brake hose joint side)	M10	2	29 Nm (2.9 m·kgf, 21 ft·lbf)	
Rear brake fluid reservoir holder bolt	M6	1	7 Nm (0.7 m·kgf, 5.1 ft·lbf)	
Rear brake hose union bolt (master cylinder side)	M10	1	29 Nm (2.9 m·kgf, 21 ft·lbf)	
Rear brake hose union bolt (brake caliper side)	M10	1	29 Nm (2.9 m·kgf, 21 ft·lbf)	

Item	Thread size	Q'ty	Tightening torque	Remarks
Rear brake hose union bolt (hydraulic unit side)	M10	2	29 Nm (2.9 m·kgf, 21 ft·lbf)	
Rear brake light switch bracket bolt	M6	2	7 Nm (0.7 m·kgf, 5.1 ft·lbf)	
Footrest assembly bolt	M8	4	30 Nm (3.0 m·kgf, 22 ft·lbf)	
Rear brake master cylinder bolt	M8	2	23 Nm (2.3 m·kgf, 17 ft·lbf)	
Rear brake pedal bolt	M10	1	30 Nm (3.0 m·kgf, 22 ft·lbf)	
Rear brake hose guide bolt	M6	1	7 Nm (0.7 m·kgf, 5.1 ft·lbf)	
Rear brake pedal adjusting locknut	M8	2	17 Nm (1.7 m·kgf, 12 ft·lbf)	
Grip end bolt	M6	2	7 Nm (0.7 m·kgf, 5.1 ft·lbf)	
Handlebar switch screw (right)	M5	2	1.5 Nm (0.15 m·kgf, 1.1 ft·lbf)	
Throttle cable guide screw (handlebar side)	M5	1	2.5 Nm (0.25 m·kgf, 1.8 ft·lbf)	
Throttle cable locknut	M6	1	4.3 Nm (0.43 m·kgf, 3.1 ft·lbf)	
Throttle cable guide bolt	M5	2	4.5 Nm (0.45 m·kgf, 3.3 ft·lbf)	
Throttle cable holder bolt	M6	1	7 Nm (0.7 m·kgf, 5.1 ft·lbf)	
Upper handlebar holder bolt	M8	4	28 Nm (2.8 m·kgf, 20 ft·lbf)	
Lower handlebar holder nut	M10	2	32 Nm (3.2 m·kgf, 23 ft·lbf)	
Handlebar switch screw (left)	M5	2	1.5 Nm (0.15 m·kgf, 1.1 ft·lbf)	
Clutch lever pivot nut	M6	1	7 Nm (0.7 m·kgf, 5.1 ft·lbf)	
Clutch cable locknut	M8	1	7 Nm (0.7 m·kgf, 5.1 ft·lbf)	
Clutch lever holder pinch bolt	M6	1	7 Nm (0.7 m·kgf, 5.1 ft·lbf)	
Clutch switch screw	M3	1	0.6 Nm (0.06 m·kgf, 0.43 ft·lbf)	
Front fender bolt (front)	M6	2	7 Nm (0.7 m·kgf, 5.1 ft·lbf)	
Front fender bolt (rear)	M6	1	7 Nm (0.7 m·kgf, 5.1 ft·lbf)	
Lower bracket pinch bolt	M10	2	30 Nm (3.0 m·kgf, 22 ft·lbf)	
Upper bracket pinch bolt	M8	2	21 Nm (2.1 m·kgf, 15 ft·lbf)	
Front fork cap bolt	M38	2	23 Nm (2.3 m·kgf, 17 ft·lbf)	
Front fork damper rod bolt	M10	2	30 Nm (3.0 m·kgf, 22 ft·lbf)	
Horn bolt	M8	1	16 Nm (1.6 m·kgf, 12 ft·lbf)	
Horn bracket bolt	M6	2	7 Nm (0.7 m·kgf, 5.1 ft·lbf)	
Headlight upper bracket bolt	M6	2	7 Nm (0.7 m·kgf, 5.1 ft·lbf)	
Steering stem bolt	M14	1	95 Nm (9.5 m·kgf, 69 ft·lbf)	
Lower ring nut (initial tightening torque)	M24	1	48 Nm (4.8 m·kgf, 35 ft·lbf)	
Lower ring nut (final tightening torque)	M24	1	18 Nm (1.8 m·kgf, 13 ft·lbf)	
Mudguard bolt	M5	2	1.8 Nm (0.18 m·kgf, 1.3 ft·lbf)	
Rear shock absorber assembly bolt (lower side)	M12	1	58 Nm (5.8 m·kgf, 42 ft·lbf)	
Rear shock absorber assembly nut (upper side)	M12	1	58 Nm (5.8 m·kgf, 42 ft·lbf)	
Drive chain guard bolt	M6	2	10 Nm (1.0 m·kgf, 7.2 ft·lbf)	
Pivot shaft nut	M16	1	115 Nm (11.5 m·kgf, 83 ft·lbf)	

Item	Thread size	Q'ty	Tightening torque	Remarks
Drive sprocket cover bolt	M6	2	10 Nm (1.0 m·kgf, 7.2 ft·lbf)	
Drive sprocket nut	M20	1	75 Nm (7.5 m·kgf, 54 ft·lbf)	
Shift arm pinch bolt	M6	1	14 Nm (1.4 m·kgf, 10 ft·lbf)	
Shift rod locknut (shift arm side)	M6	1	7 Nm (0.7 m·kgf, 5.1 ft·lbf)	
Shift rod locknut (shift pedal side)	M6	1	7 Nm (0.7 m·kgf, 5.1 ft·lbf)	Left-hand thread
Shift pedal bolt	M10	1	30 Nm (3.0 m·kgf, 22 ft·lbf)	
Footrest plate bolt	M6	2	10 Nm (1.0 m·kgf, 7.2 ft·lbf)	
Fuel pump bolt	M5	6	4.0 Nm (0.40 m·kgf, 2.9 ft·lbf)	
Rear fuel tank bracket bolt (fuel tank)	M6	2	10 Nm (1.0 m·kgf, 7.2 ft·lbf)	
Rear fuel tank bracket bolt (frame)	M8	2	12 Nm (1.2 m·kgf, 8.7 ft·lbf)	
Front fuel tank bracket bolt (fuel tank)	M6	2	10 Nm (1.0 m·kgf, 7.2 ft·lbf)	
Front fuel tank bracket bolt (frame)	M6	2	12 Nm (1.2 m·kgf, 8.7 ft·lbf)	
Sidestand nut	M10	1	34 Nm (3.4 m·kgf, 25 ft·lbf)	
Passenger footrest assembly bolt	M8	4	28 Nm (2.8 m·kgf, 20 ft·lbf)	
Rear fender bolt	M6	4	9 Nm (0.9 m·kgf, 6.5 ft·lbf)	
Taillight unit assembly bolt	M6	2	3.3 Nm (0.33 m·kgf, 2.4 ft·lbf)	
Hydraulic unit bolt	M6	3	7 Nm (0.7 m·kgf, 5.1 ft·lbf)	
Hydraulic unit bolt bracket bolt	M6	3	7 Nm (0.7 m·kgf, 5.1 ft·lbf)	

EAS20018
LUBRICATION POINTS AND LUBRICANT TYPES

EAS30018
ENGINE

Lubrication point	Lubricant
Bearings	E
O-rings	LS
Oil seal lips	LS
Cylinder head bolt seats, cylinder head bolt threads and washers	M
Crankshaft big ends	E
Connecting rod bolts	M
Generator rotor bolt thread and washer	M
Crankshaft journals	E
Balancer gear and damper	E
Balancer shaft journals	E
Cylinder inner surface, piston, ring grooves, and piston rings	E
Piston pins	E
Camshaft lobes	M
Camshaft journals	M
Valve stems (intake and exhaust)	M
Valve stem ends (intake and exhaust)	M
Valve lifter surfaces	E
Valve stem seals	E
Timing chain tensioner outer surface	E
Oil pump rotors (inner and outer)	E
Oil pump shaft	E
Oil filter cartridge union bolt	E
Oil strainer seal	E or LS
Oil pump idle gear shaft	E
Oil pump idle gear inner and thrust surfaces	M
Starter clutch idle gear thrust surfaces	E
Starter clutch rollers and starter clutch gear boss	E
Starter clutch idle gear shaft	E
Primary drive gear bolt threads and washer	M
Primary driven gear inner surface	E
Crankcase cover and clutch pull rod	LS
Oil pump drive gear inner surface and washer	E
Clutch boss nut and conical washer	E
Clutch housing thrust washer	E
Transmission gears (wheel and pinion) and collar	M
Transmission gears inner surface (shift fork contact parts)	M

Lubrication point	Lubricant
Shift fork and transmission gear contact surface	M
Shift drum assembly	E
Shift forks and shift fork guide bars	E
Shift shaft moving surface	E
Shift shaft washer	E

EAS30019
CHASSIS

Lubrication point	Lubricant
Steering bearings and bearing races (upper and lower)	LS
Throttle grip inner surface and throttle cable end	LS
Brake lever pivotting point and metal-to-metal moving parts	S
Clutch lever pivotting point and metal-to-metal moving parts	LS
Clutch cable end	LS
Swingarm pivot shaft spacer	LS
Swingarm pivot shaft bearings	LS
Swingarm dust cover lips	LS
Sidestand pivotting point and metal-to-metal moving parts	LS
Shift shaft	LS
Rear brake pedal shaft	LS
Front wheel oil seal lips	LS
Front axle shaft nut	LS
Rear wheel oil seal lips	LS
Rear wheel drive hub color	LS
Rear wheel drive hub mating surface	LS

EAS20019
LUBRICATION SYSTEM CHART AND DIAGRAMS

EAS30020
ENGINE OIL LUBRICATION CHART

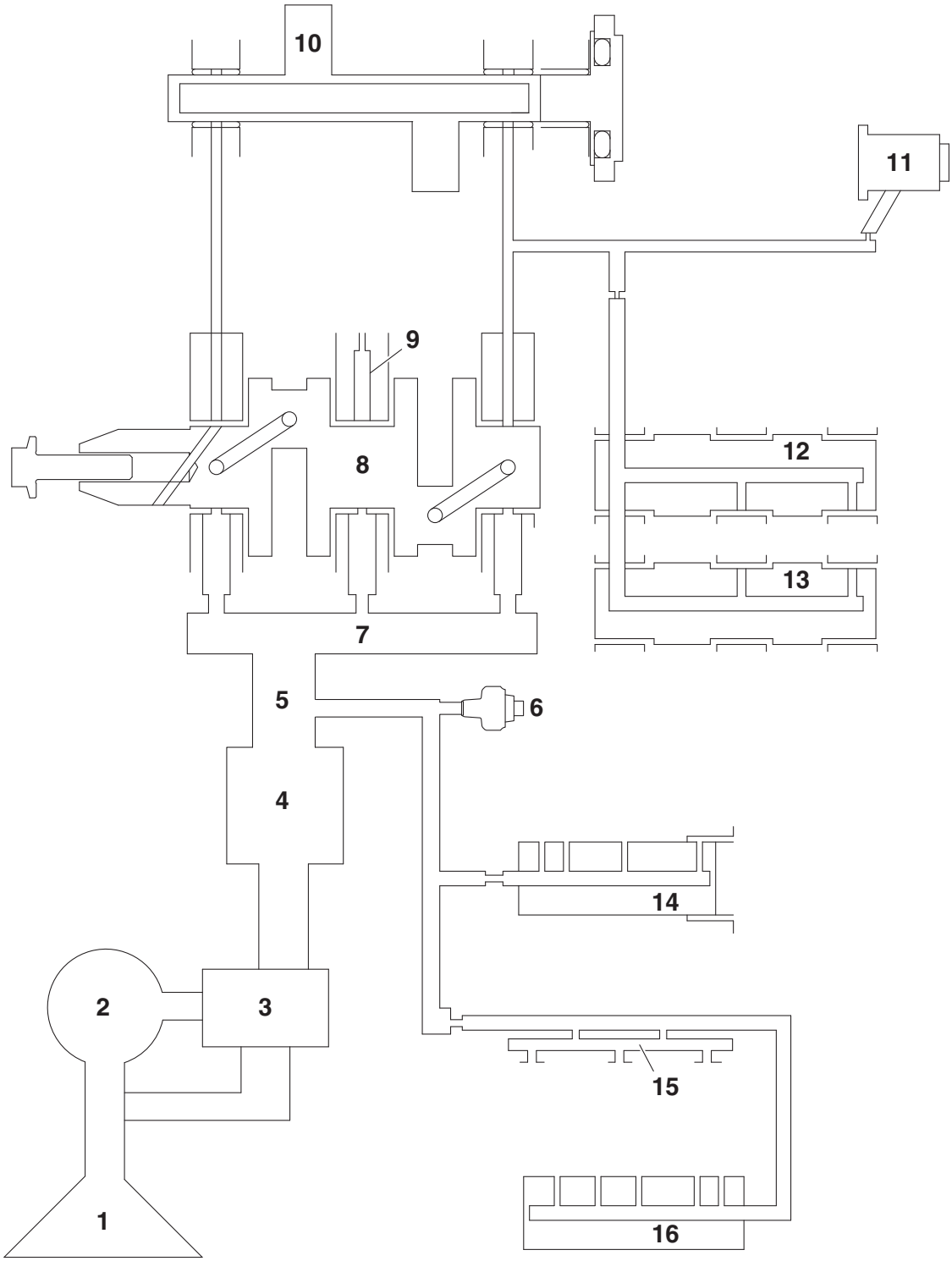

1. Oil strainer
2. Oil pump
3. Relief valve
4. Oil filter cartridge
5. Sub gallery
6. Oil pressure switch
7. Main gallery
8. Crankshaft
9. Oil nozzle
10. Balancer shaft assembly
11. Timing chain tensioner
12. Intake camshaft
13. Exhaust camshaft
14. Main axle
15. Transmission shower
16. Drive axle

EAS30021

LUBRICATION DIAGRAMS

Crankcase, cylinder, and cylinder head (right side view)

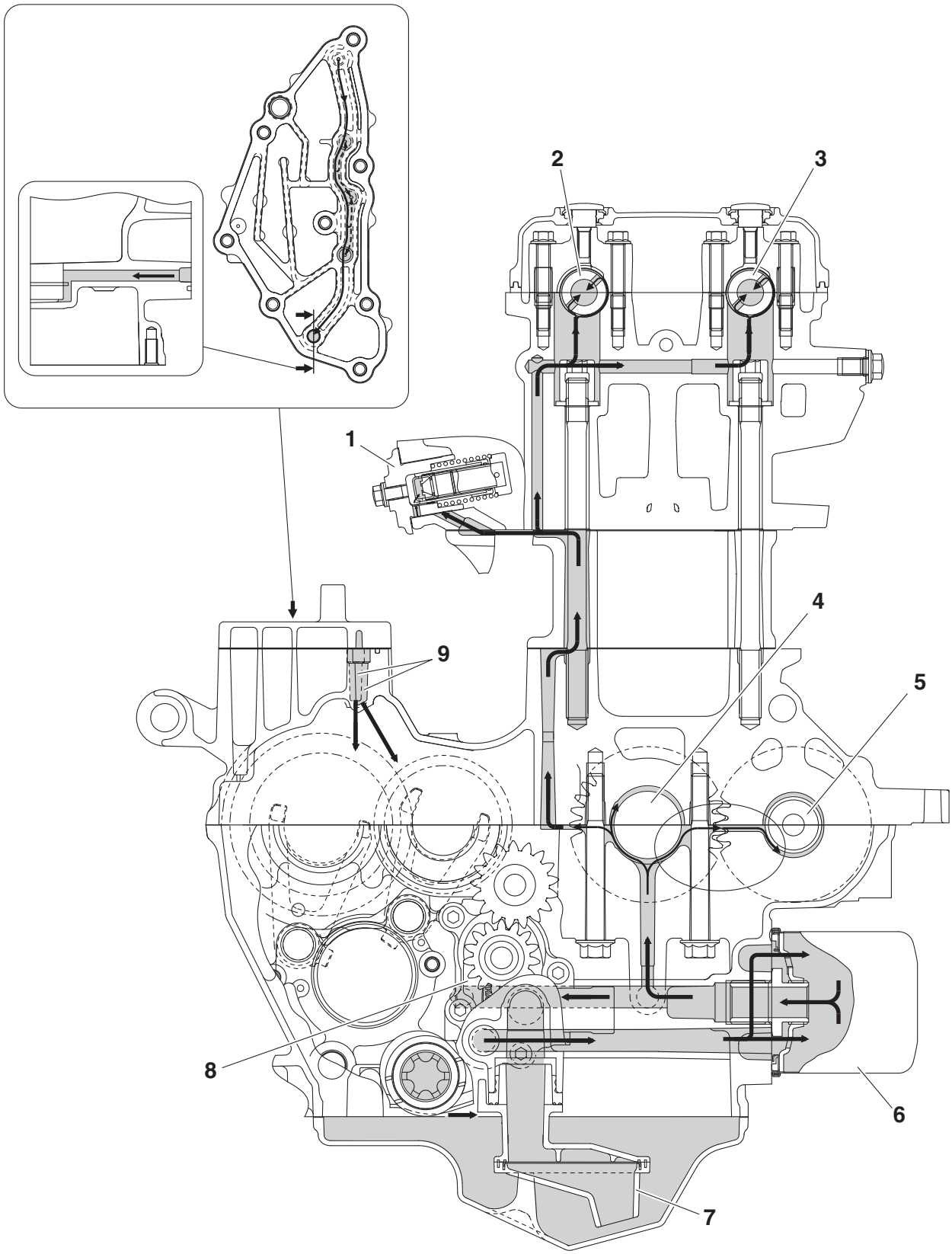

1. Timing chain tensioner
2. Intake camshaft
3. Exhaust camshaft
4. Crankshaft
5. Balancer shaft assembly
6. Oil filter cartridge
7. Oil strainer
8. Oil pump
9. Transmission shower

Crankcase and cylinder (left side view)

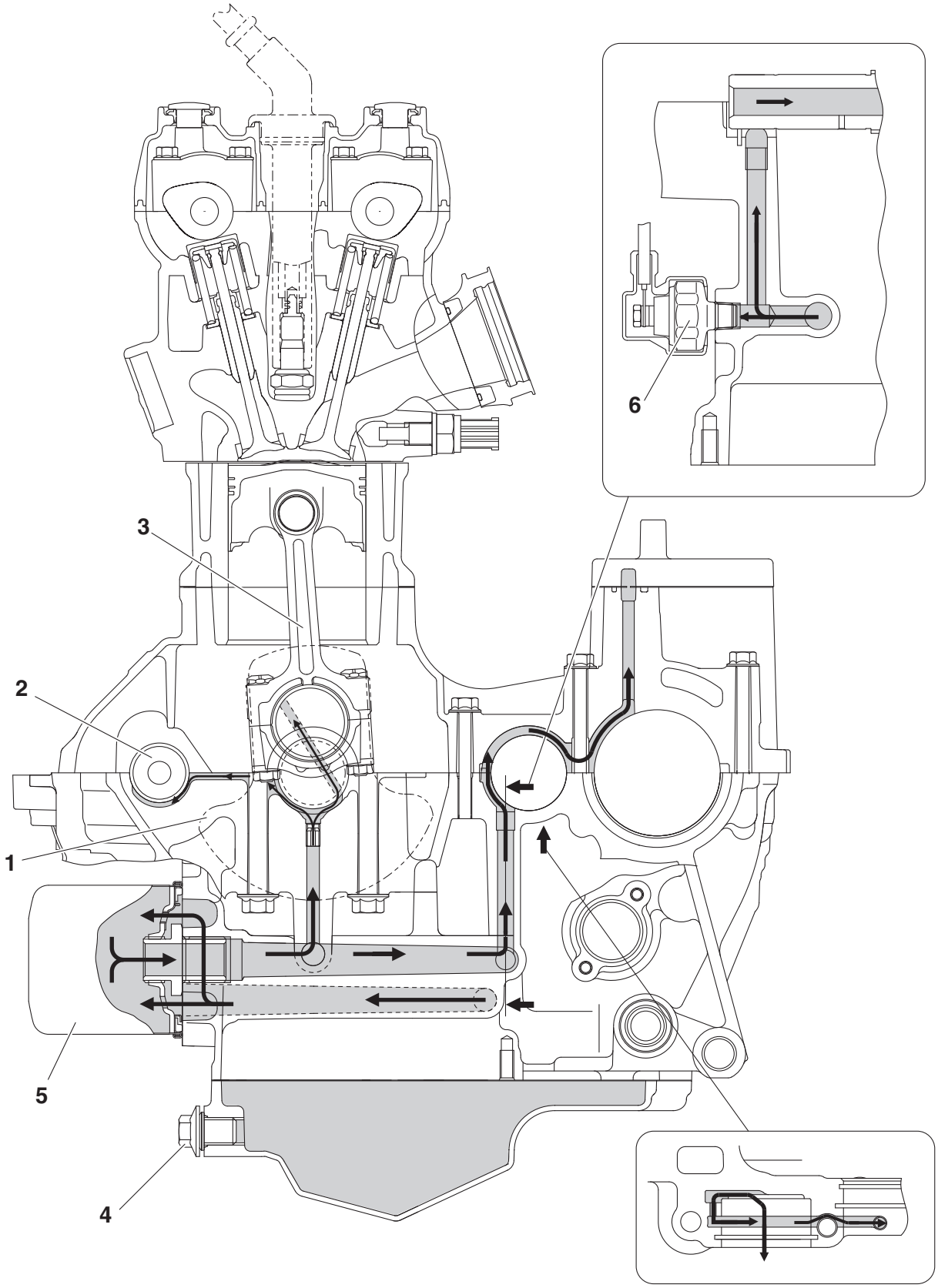

1. Crankshaft
2. Balancer shaft assembly
3. Connecting rod
4. Oil drain bolt
5. Oil filter cartridge
6. Oil pressure switch

Oil pump (right side view)

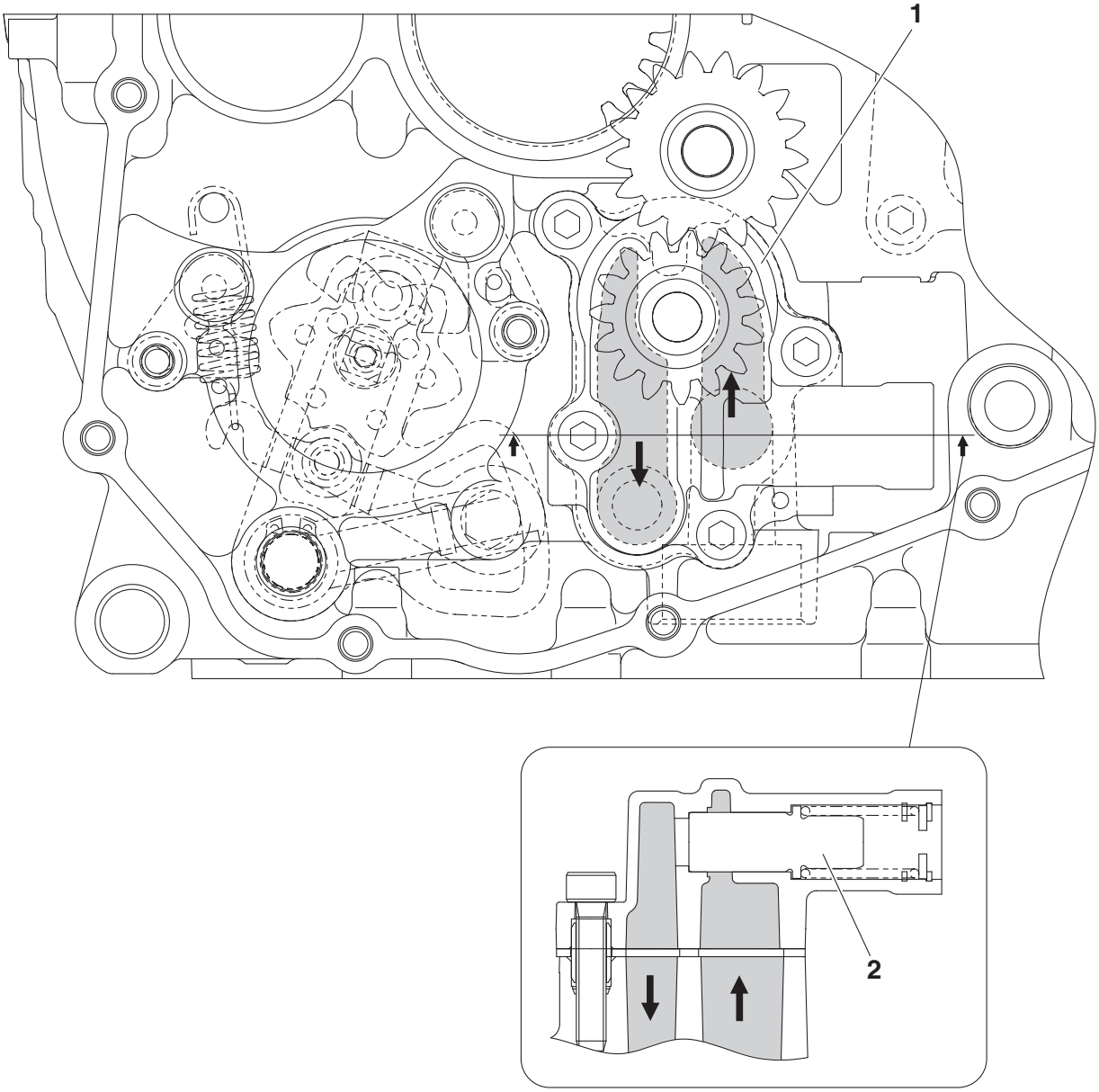

1. Oil pump
2. Relief valve

Oil strainer (bottom view)

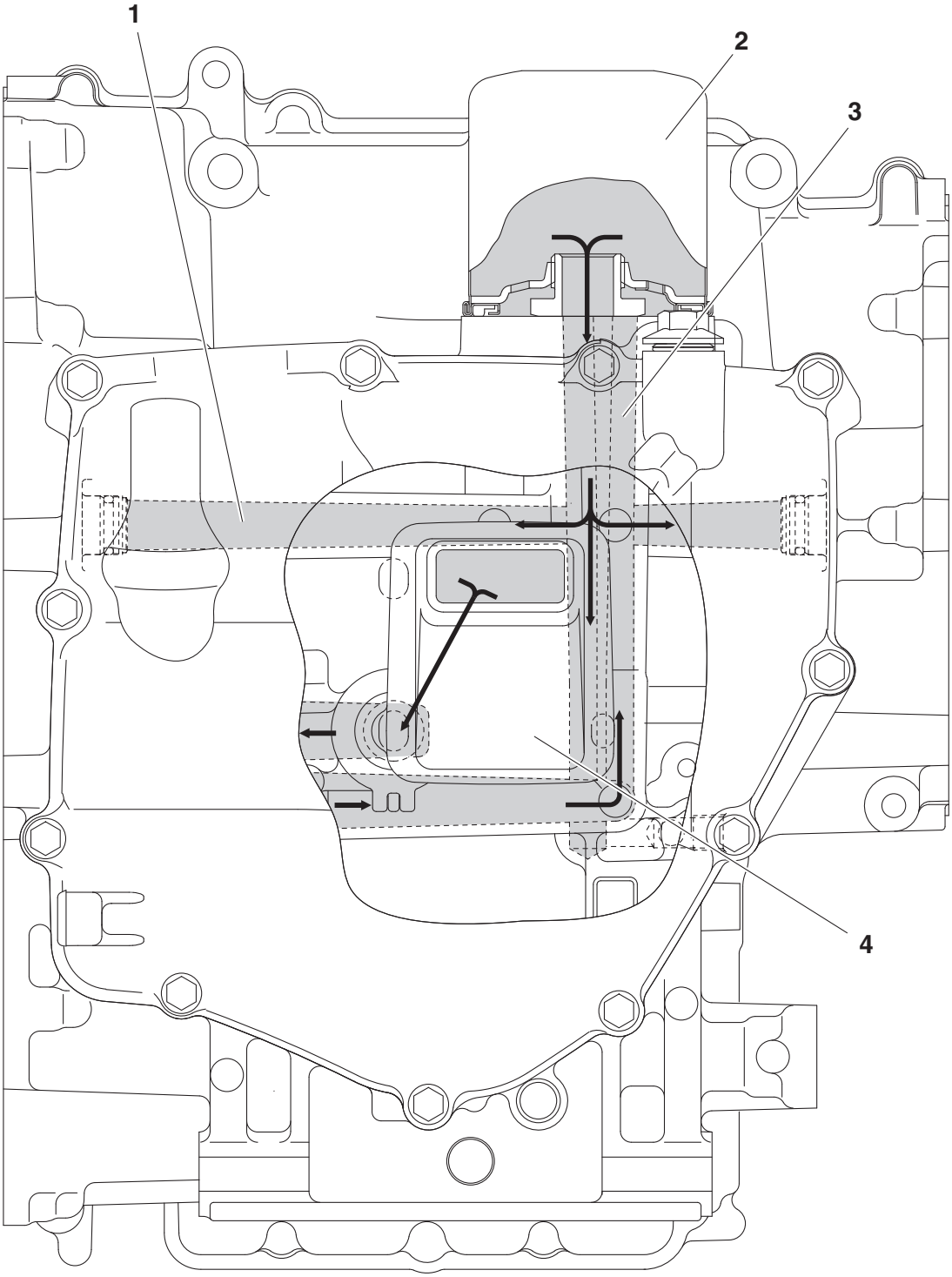

1. Main gallery
2. Oil filter cartridge
3. Sub gallery
4. Oil strainer

Camshaft (top view)

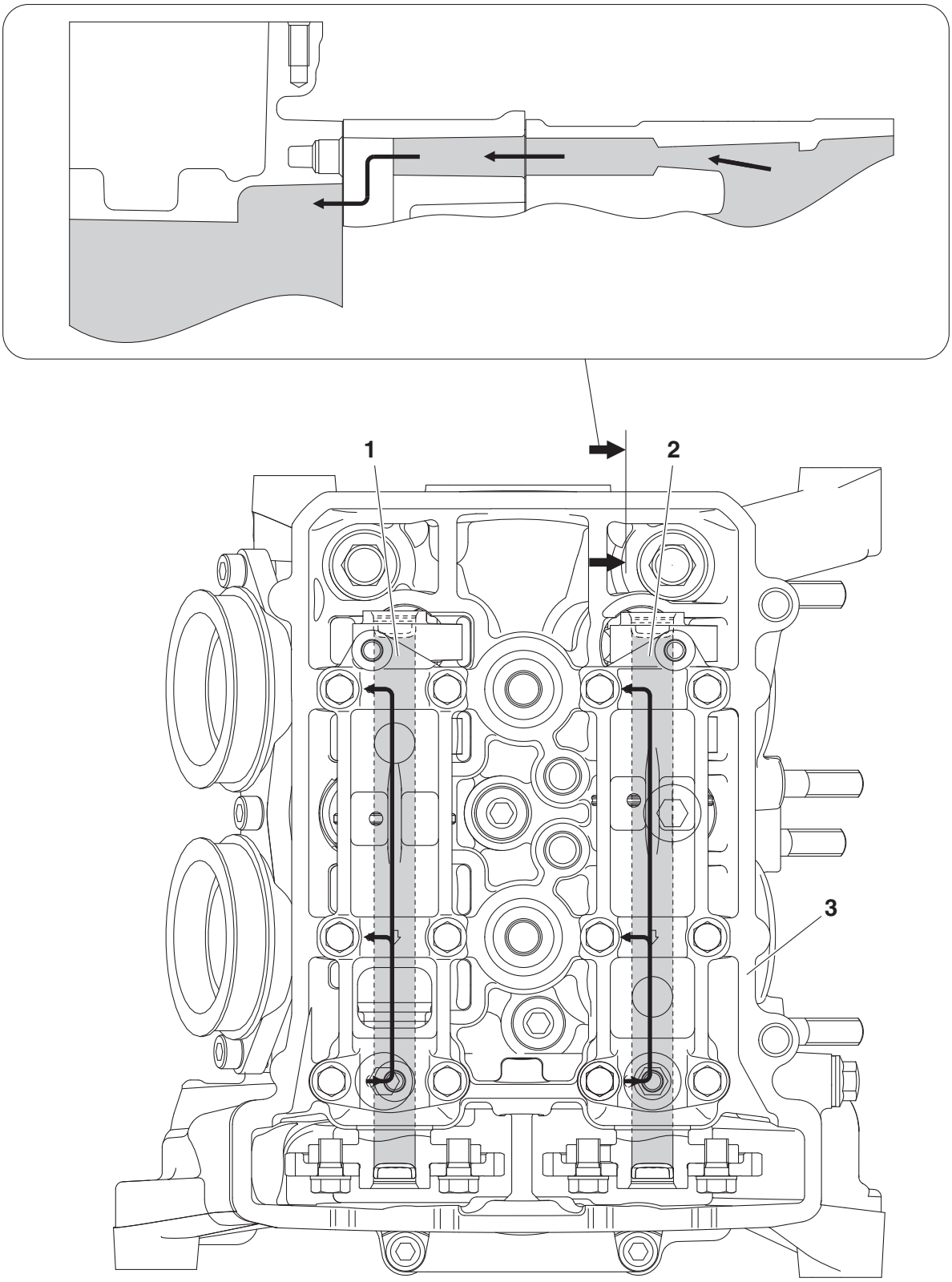

1. Intake camshaft
2. Exhaust camshaft
3. Cylinder head

Crankshaft (rear view)

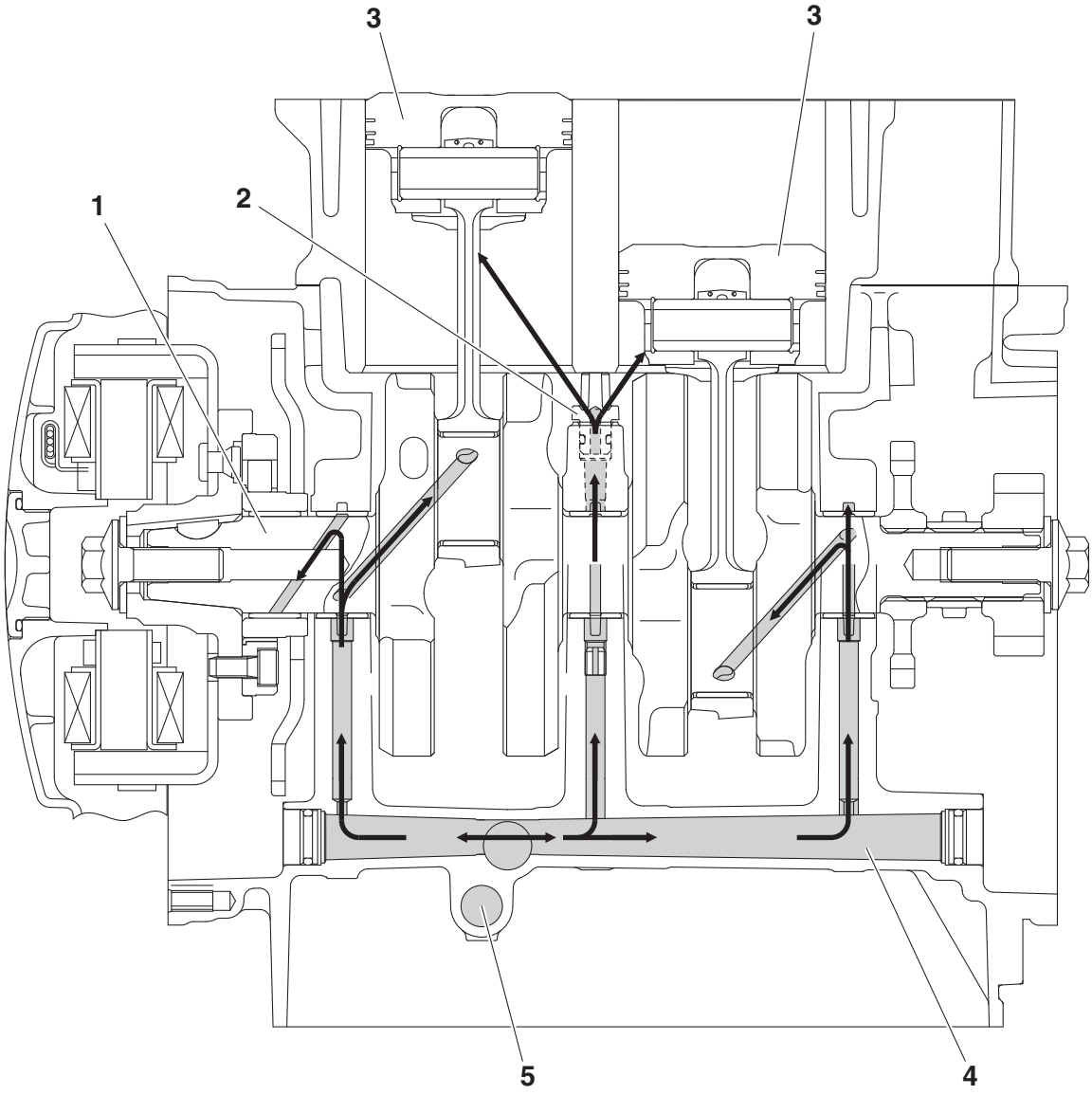

1. Crankshaft
2. Oil nozzle
3. Piston
4. Main gallery
5. Sub gallery

Crankshaft and transmission (top view)

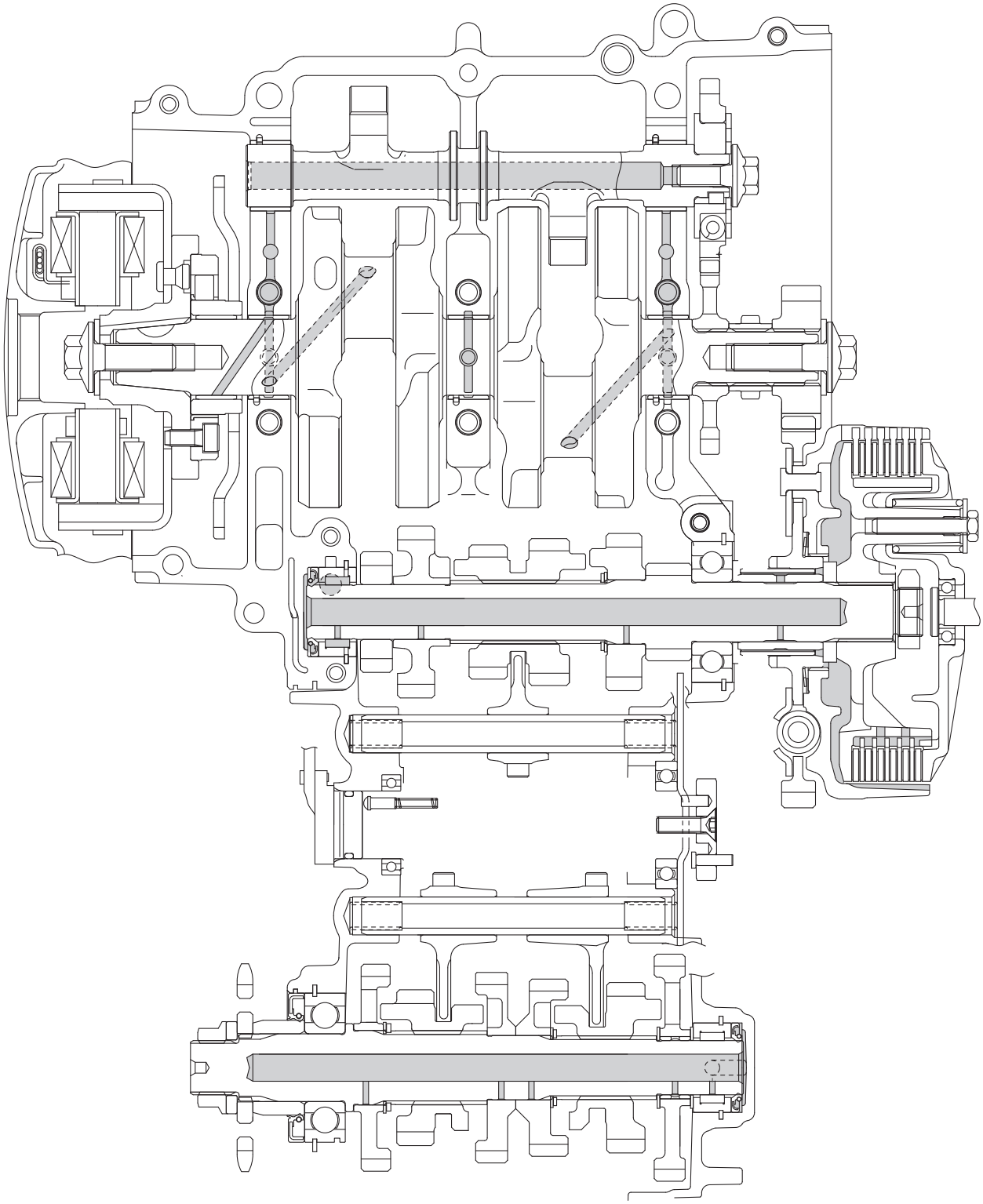

1. Throttle cable (accelerator cable)
2. Throttle cable (decelerator cable)
3. Front brake hose (brake master cylinder to hose joint)
4. Wire harness
5. Clutch cable
6. Handlebar switch lead (right handlebar switch)
7. Main switch lead
8. Ignition coil lead
9. Coolant reservoir hose
10. Air cut-off valve
11. Clutch cable guide bracket

A. Route the front brake hose (brake master cylinder to hose joint) to the front of the throttle cables.
B. Connect the ignition coil lead that has white tape to the right ignition coil.
C. Route the throttle cables to the front of the right handlebar switch lead.
D. Route the throttle cables through the guide.
E. Route the main switch lead to the front of the clutch cable guide bracket.

Engine (right side view)

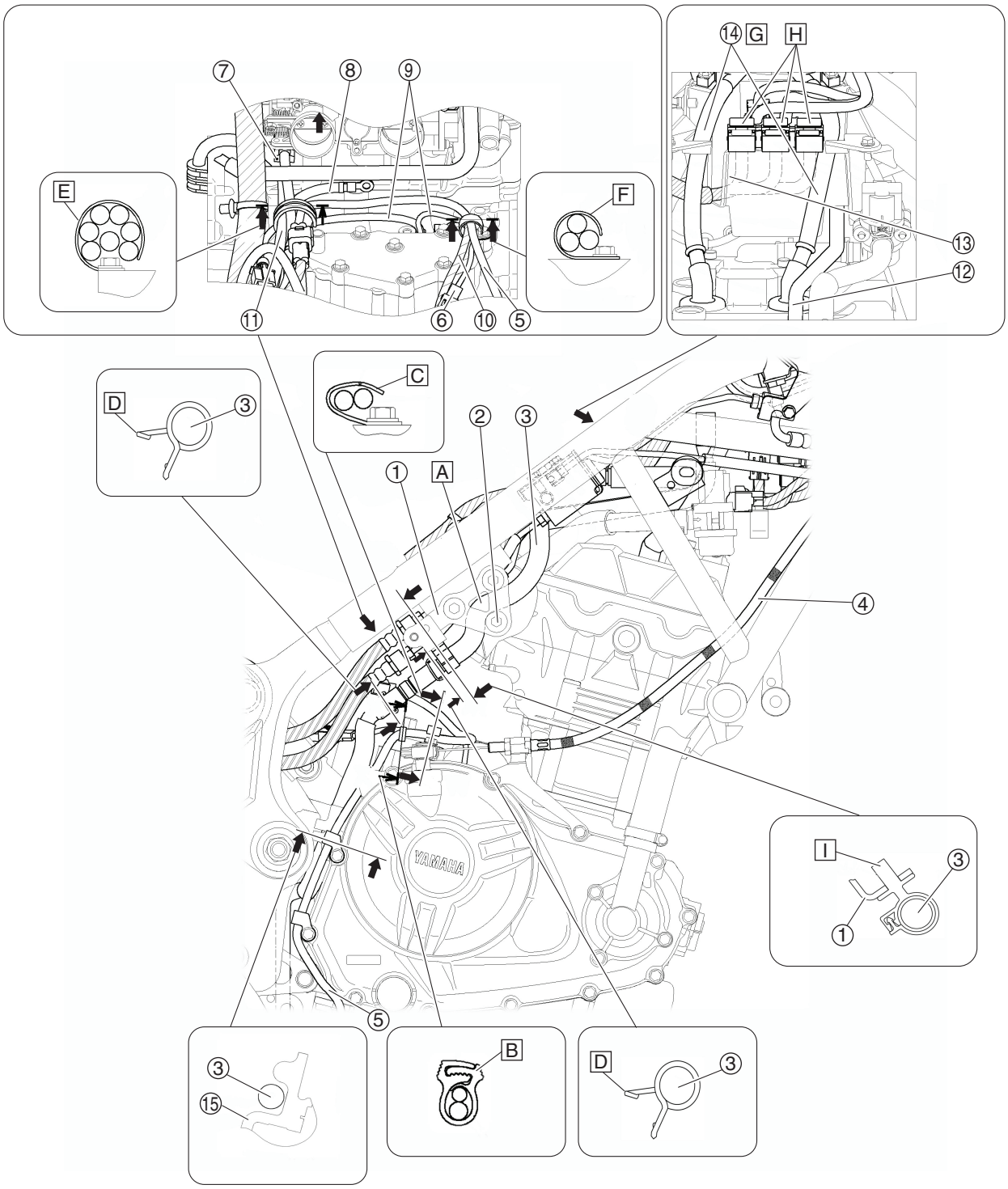

1. Engine bracket (right)
2. Engine mounting bolt (right upper side)
3. Fuel tank overflow hose
4. Clutch cable
5. O_2 sensor lead
6. Negative battery sub-wire harness coupler
7. Coolant temperature sensor coupler
8. Starter motor lead
9. Negative battery sub-wire harness
10. Speed sensor lead
11. Stator coil lead
12. Coolant reservoir hose
13. Electrical components tray
14. Spark plug lead
15. Lower crankcase

A. Route the fuel tank overflow hose above the engine mounting bolt (right upper side).
B. Fasten the O_2 sensor lead with the holder. Align the mark near the coupler on the lead with the holder.
C. Fasten the O_2 sensor lead with the holder. Align the holder with the mark near the O_2 sensor on the lead.
D. Point the end of the hose clamp inward.
E. Fasten the stator coil lead, coolant temperature sensor lead, oil pressure switch lead, gear position switch lead, O_2 sensor lead, negative battery sub-wire harness, and starter motor lead with the holder. The leads may be fastened in any order.
F. Fasten the O_2 sensor lead, and negative battery sub-wire harness with the holder. The leads may be fastened in any order.
G. Route the spark plug lead to the front of the projection on the electrical components tray.
H. Insert relay assy in to rib on box (install white connector to right side vehicle).
I. Insert the projection on the holder into the hole in the engine bracket (right).

Rear fender (right side view)

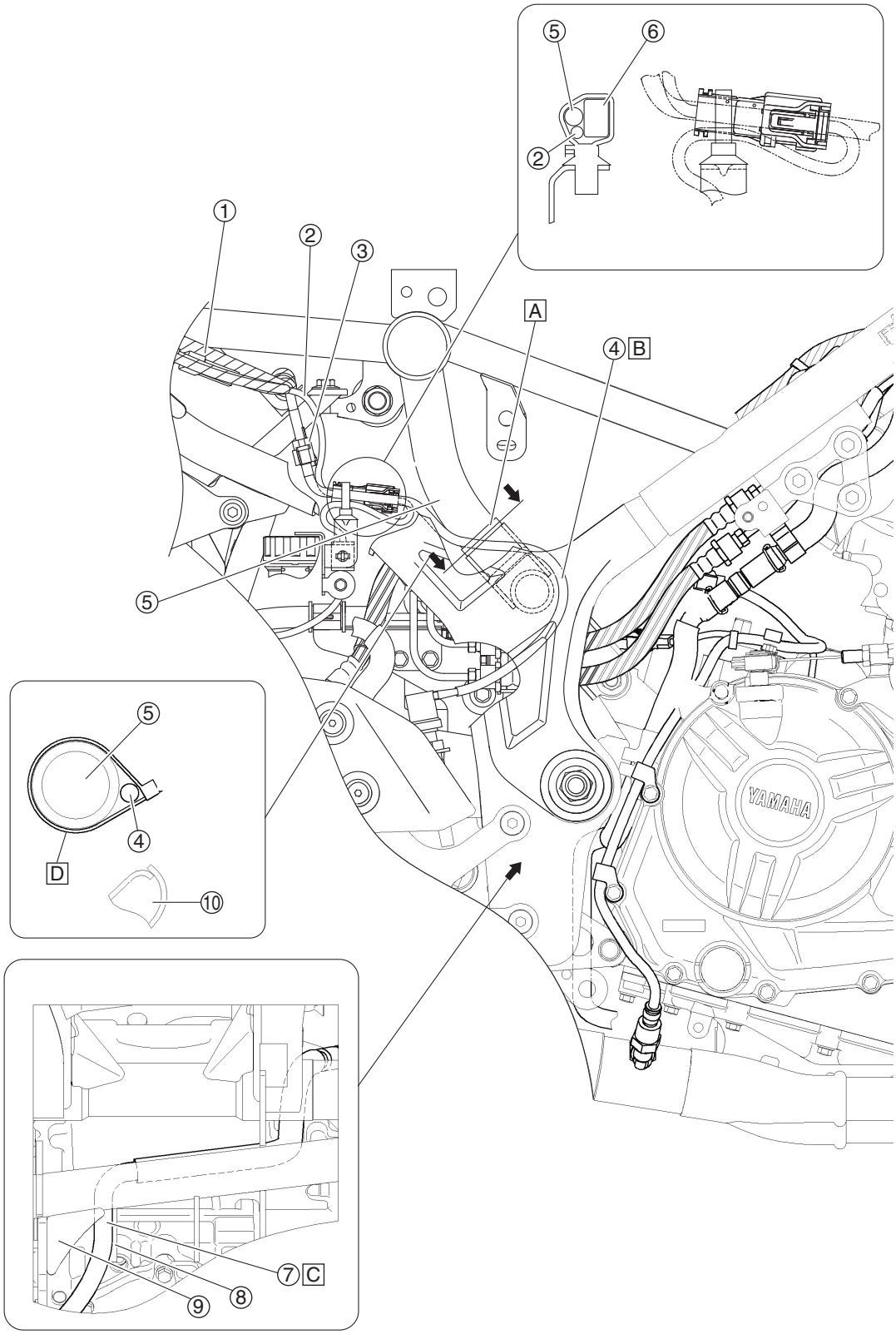

1. Fuse box lead
2. Rear wheel sensor lead
3. Rear brake light switch coupler
4. Rear brake light switch lead
5. Down tube
6. Rear wheel sensor coupler
7. Fuel tank overflow hose
8. Stay
9. Engine stay
10. Frame

A. Position the plastic locking tie at the location shown in the illustration.
B. Route the rear brake light switch lead to the front of the frame cross member.
C. Route the fuel tank overflow hose between the stay and the engine stay.
D. Fasten the rear brake light switch lead at the white tape to the down tube with a plastic locking tie. Face the buckle of the plastic locking tie outward with the end pointing upward. Cut off the excess end of the plastic locking tie to 3 mm (0.12 in) or less.

Handlebar (left side view)

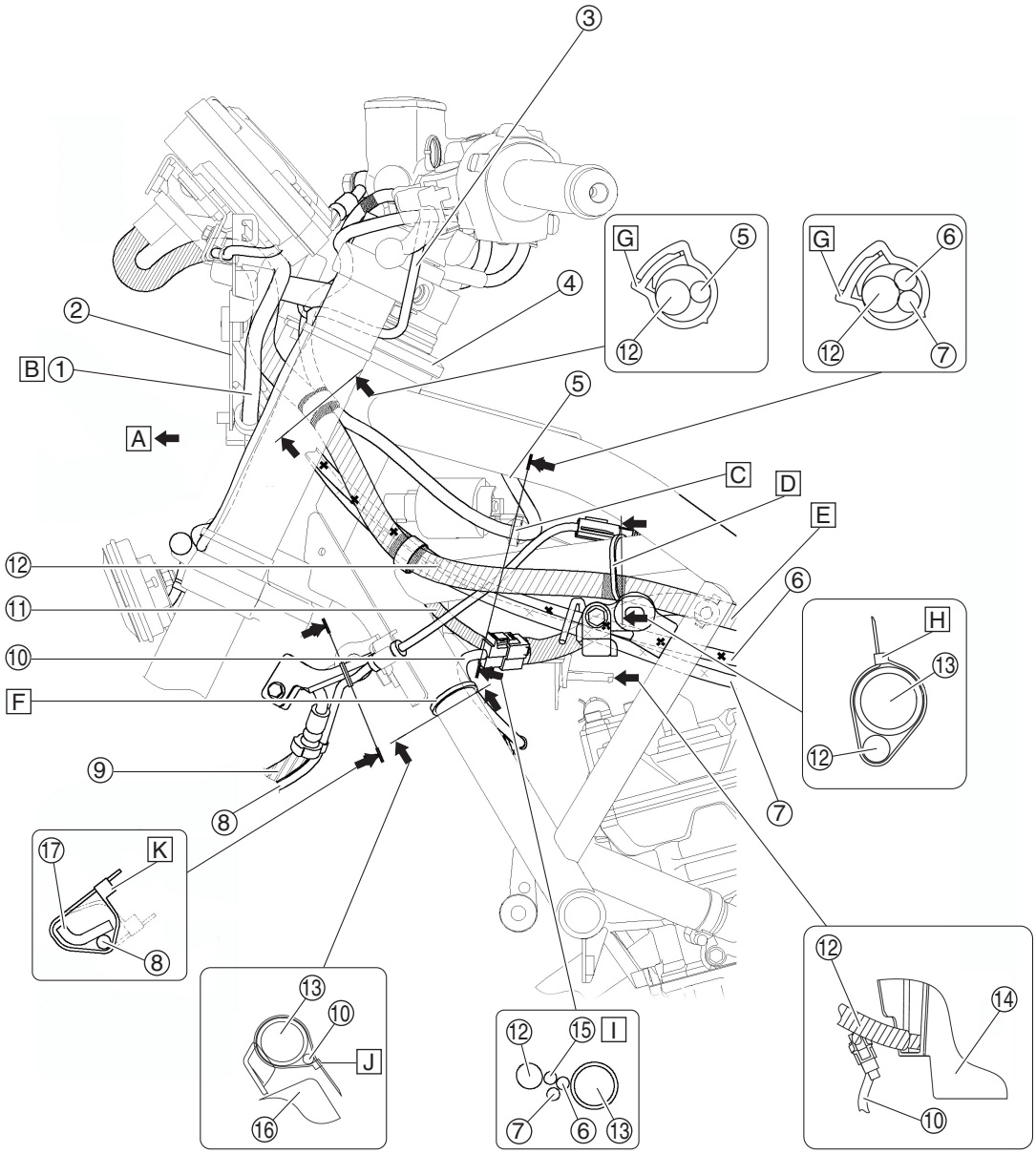

1. Headlight lead
2. Headlight bracket
3. Horn lead
4. Upper bearing cover
5. Handlebar switch lead (left handlebar switch)
6. Throttle cable (accelerator cable)
7. Throttle cable (decelerator cable)
8. Front wheel sensor lead
9. Front brake hose (brake hose joint to front brake caliper)
10. Radiator fan motor lead
11. Ignition coil lead
12. Wire harness
13. Frame
14. Electrical components tray
15. Front wheel sensor lead
16. Radiator
17. Wire holder

A. To the headlight assembly.
B. Route the headlight lead to the front of the guide on the headlight bracket.
C. Secure the holder by inserting the projection on the holder into the hole in the electrical components tray.
D. Fasten the wire harness at the white tape to the frame with a plastic locking tie.
E. Make sure that there is no slack in the wire harness between the holder and the plastic locking tie.
F. Fasten the radiator fan motor lead to the frame with a plastic locking tie at the location shown in the illustration.
G. Face the catch of the holder outward.
H. Fasten the wire harness with a plastic locking tie as shown in the illustration. Point the end of the plastic locking tie upward.
I. Pass front wheel sensor lead between main harness and throttle cables.
J. Fasten the radiator fan motor lead with a plastic locking tie as shown in the illustration. Point the end of the plastic locking tie inward.
K. Turn tin of clamp to outward of vehicle.

Engine (left side view)

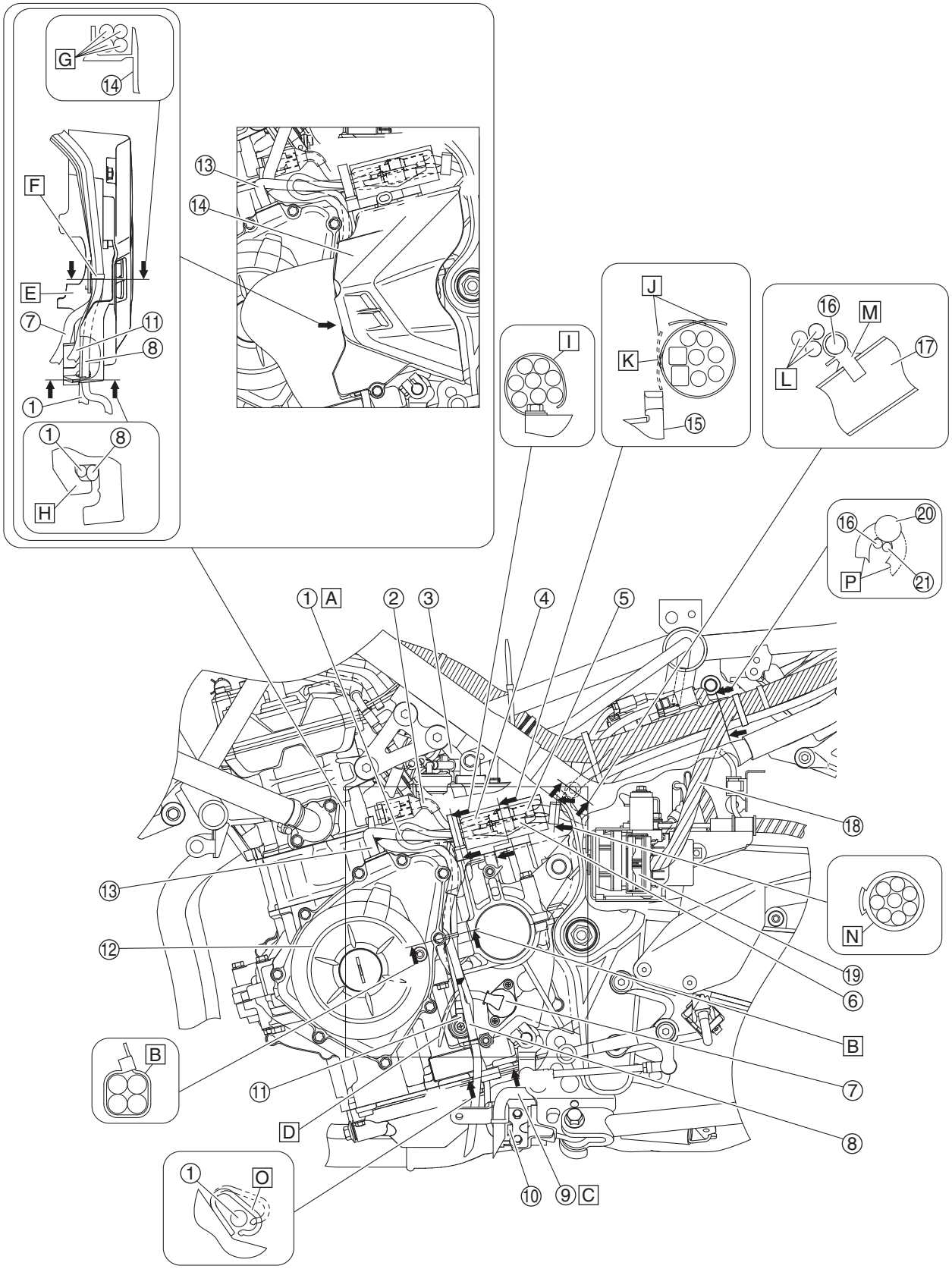

1. Sidestand switch lead
2. Coolant temperature sensor lead
3. Coolant reservoir hose
4. O_2 sensor lead
5. O_2 sensor coupler
6. Sidestand switch coupler
7. Gear position switch lead
8. Fuel tank breather hose
9. Fuel tank overflow hose
10. Sidestand switch
11. Oil pressure switch lead
12. Generator cover
13. Stator coil lead
14. Drive sprocket cover
15. Drive chain guide
16. Minus lead
17. Frame
18. Hydraulic unit lead
19. Hydraulic unit
20. Wire harness
21. Starter motor lead

A. Pull the sidestand switch lead forward so that the sidestand switch coupler is positioned inside the band. Place the slack in the sidestand switch lead to the front of the metal clamp and above the generator cover.

B. Fasten the fuel tank breather hose, oil pressure switch lead, gear position switch lead, and sidestand switch lead at the location shown in the illustration with a plastic locking tie. The leads bay be routed in any order. Cut off the excess end of the plastic locking tie to 3 mm (0.12 in) or less.

C. Route the fuel tank over flow hose through the guide on the sidestand bracket. Pull the hose downward so that the bent portion of the hose contacts the stay.

D. Point the end of the plastic locking tie downward.

E. When installing the drive chain cover, be sure not to pinch the leads.

F. Route the oil pressure switch lead, gear position switch lead, fuel tank breather hose, and sidestand switch lead to the outside of the rib on the drive sprocket cover.

G. Route the oil pressure switch lead, fuel tank breather hose, gear position switch lead, and sidestand switch lead in any order.

H. Route the fuel tank breather hose and sidestand switch lead through the drive sprocket cover guide.

I. Fasten stator coil lead, temperature sensor lead, oil pressure switch lead, gear position switch lead, O_2 sensor lead, minus lead, starter lead, sidestand switch lead wire in any order.

J. At the back side of metal clamp, roll up all lead by the band at the connector of sidestand switch and O_2 sensor. Direction of insertion point is between outside and upper side the vehicle. Route stator coil lead, water temperature sensor lead, oil pressure switch lead, gear position switch lead, minus battery lead, starter lead, O_2 sensor connector, and sidestand switch connector in any order.

K. After fixing the band, push lead to the inside of the vehicle from the face of insertion part of recovery tank.

L. Route the gear position switch lead negative battery sub-wire harness, and starter motor lead in any order.

M. Insert the projection on the wire harness holder into the hole in the frame.

N. Fasten the stator coil lead, coolant temperature sensor lead, oil pressure switch lead, gear position switch lead, O_2 sensor lead, negative battery sub wire harness, and starter motor lead with the holder. The leads may be routed in any order. The catch of the holder may be facing in any direction.

O. Route sidestand switch lead wire to clamp, and bend the clamp.

P. Do not route the hydraulic unit lead above the wire harness.

Rear fender (left side view)

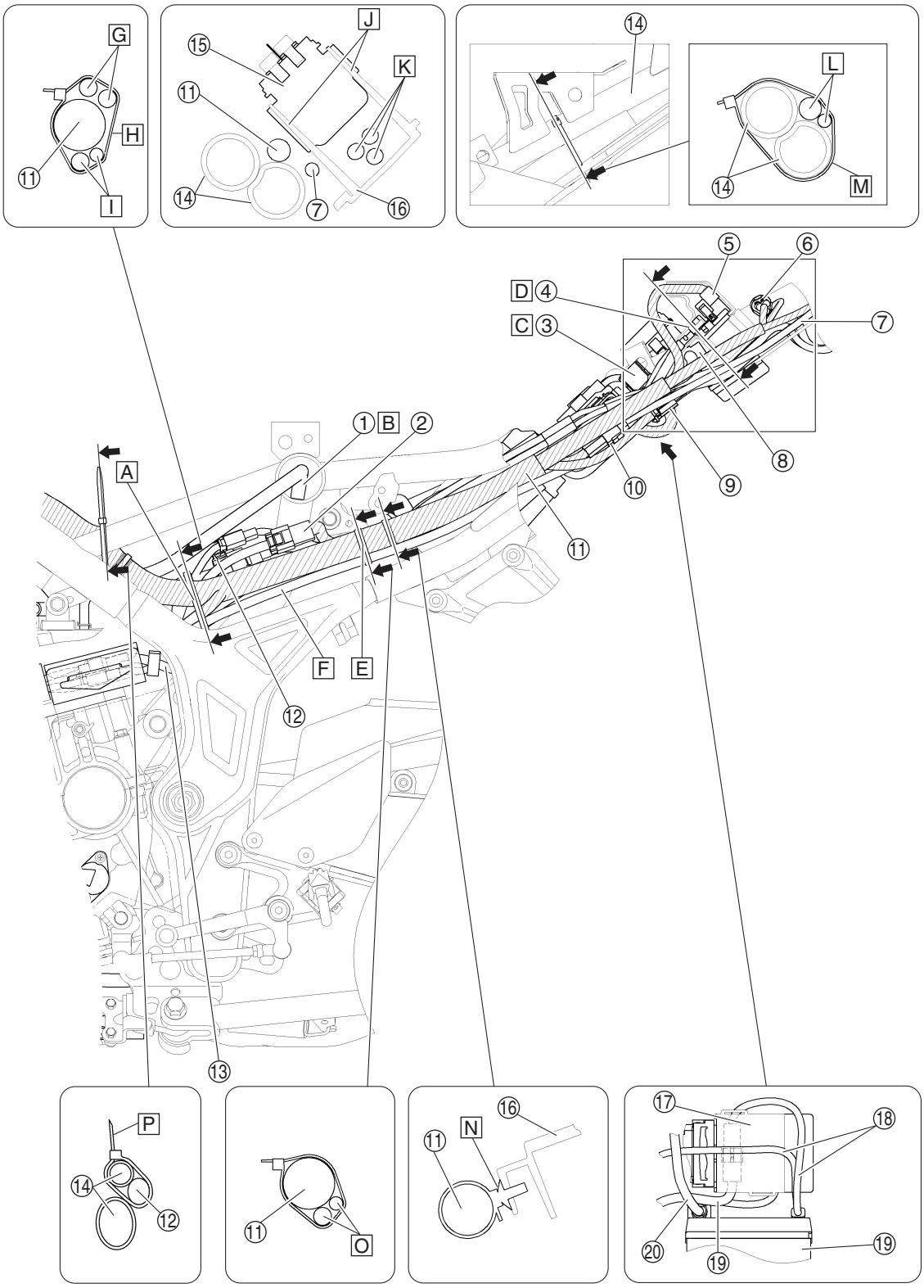

1. Coolant reservoir breather hose
2. Gear position switch coupler
3. Starting circuit cut-off relay
4. Starter motor lead terminal
5. Starter relay coupler
6. Yamaha diagnostic tool coupler
7. Tail/brake light lead
8. Rectifier/regulator coupler
9. License plate light connector
10. Tail/brake light coupler
11. Wire harness
12. Stator coil lead
13. Negative battery lead
14. Frame
15. Starter relay
16. Rear fender
17. ECU (Engine Control Unit)
18. Negative battery sub-wire harness
19. Battery
20. Positive battery lead

A. Fasten the starter motor lead, negative battery sub-wire harness, stator coil lead, and gear position switch lead to the wire harness with a plastic locking tie. Do not install the plastic locking tie on the section of the stator coil lead that is not covered by the protective sleeve.
B. Insert the end of the coolant reservoir breather hose into the frame pipe. Make sure that the end of the hose protector on the coolant reservoir breather hose contacts the edge of the hole in the frame.
C. Install the starting circuit cut-off relay onto the tab on the rear fender.
D. Install the starter motor lead and positive battery lead terminals so that the crimped section of the terminal that secures the lead is facing upward.
E. Fasten the starter motor lead and negative battery sub-wire harness to the wire harness with a plastic locking tie at the location shown in the illustration.
F. Make sure that there is no slack in the starter motor lead and negative battery sub-wire harness between the plastic locking ties.
G. Route the stator coil lead and gear position switch lead in any order.
H. Fasten the starter motor lead, negative battery sub-wire harness, stator coil lead, and gear position switch lead to the wire harness with a plastic locking tie as shown in the illustration. Face the buckle of the plastic locking tie outward with the end pointing upward. Cut off the excess end of the plastic locking tie to 3 mm (0.12 in) or less.
I. The negative battery lead and starter motor lead may be routed in any order.
J. Install the starter relay completely onto the tabs on the rear fender.
K. Route the rear left turn signal light lead, rear right turn signal light lead, and license plate light lead under the starter relay. The leads may be routed in any order.
L. Route the wire harness and tail/brake light lead in any order.
M. Fasten the wire harness and tail/brake light lead to the frame with a plastic locking tie as shown in the illustration. Point the end of the plastic locking tie outward. Cut off the excess end of the plastic locking tie to 3 mm (0.12 in) or less.
N. Insert the projection on the wire harness holder into the hole in the rear fender.
O. Fasten the starter motor lead and negative battery sub-wire harness to the wire harness with a plastic locking tie as shown in the illustration. Face the buckle of the plastic locking tie outward with the end pointing upward. Cut off the excess end of the plastic locking tie to 3 mm (0.12 in) or less.
P. Fasten the wire harness to the frame with a plastic locking tie as shown in the illustration. Point the end of the plastic locking tie upward.

Handlebar (top view)

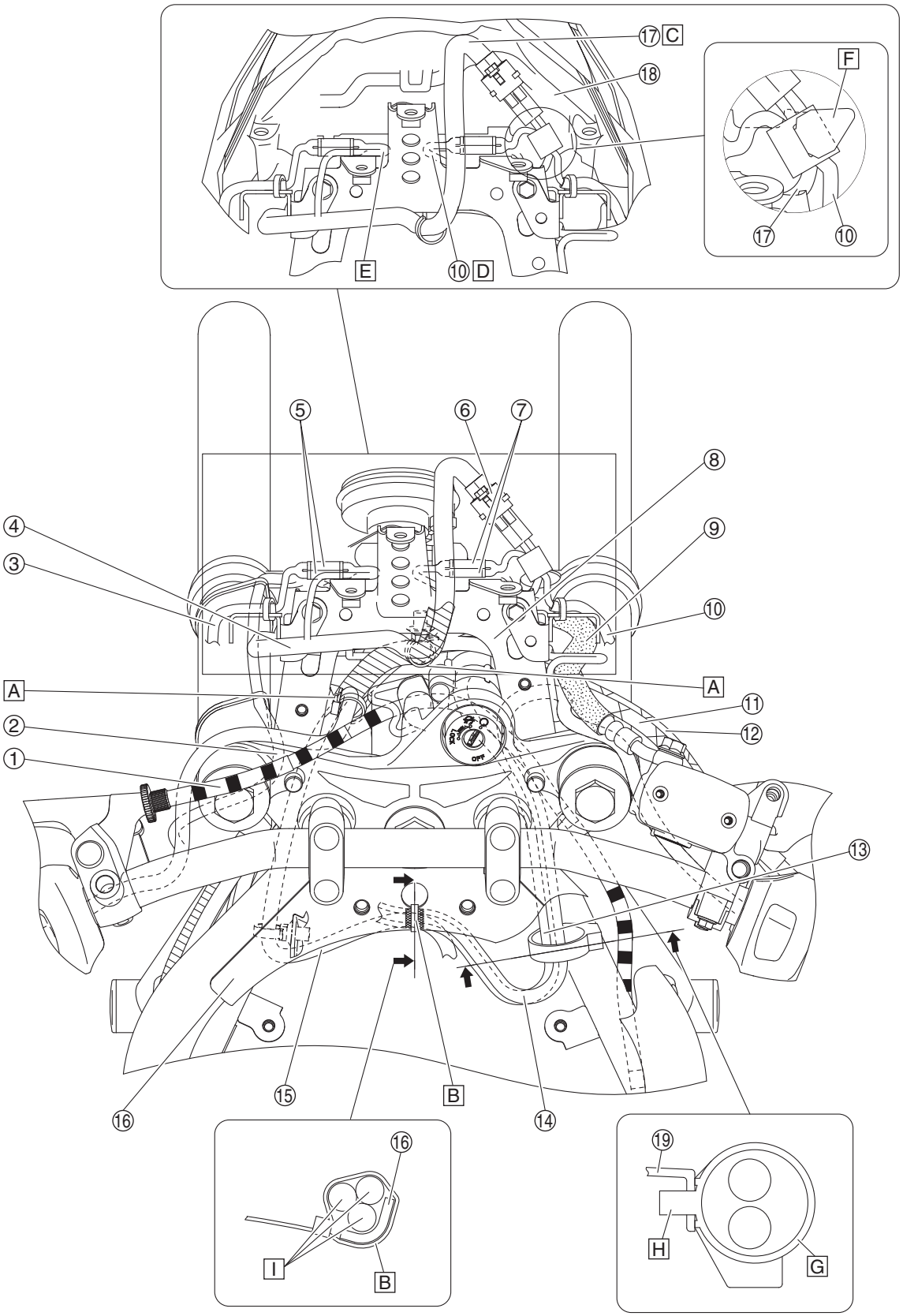

1. Clutch cable
2. Horn lead
3. Front turn signal light lead (left turn signal light)
4. Headlight lead
5. Front turn signal light connector (left turn signal light)
6. Auxiliary light coupler
7. Front turn signal light connector (right turn signal light)
8. Headlight upper bracket
9. Front brake hose (from brake master to brake hose joint)
10. Front turn signal light lead (right turn signal light)
11. Throttle cable (accelerator cable)
12. Throttle cable (decelerator cable)
13. Main switch lead
14. Handlebar switch lead (right handlebar switch)
15. Handlebar switch lead (left handlebar switch)
16. Frame
17. Auxiliary light lead
18. Auxiliary light
19. Electrical components tray

A. Secure the plastic locking tie by inserting the projection on the tie into the hole in the headlight upper bracket.
B. Fasten the right handlebar switch lead, left handlebar switch lead, and main switch lead at the white tape on each lead with a plastic locking tie. Place the end of the plastic locking tie in the electrical components tray.
C. Route the auxiliary light lead as shown in the illustration.
D. Route the right front turn signal light lead under the auxiliary light lead and headlight upper bracket.
E. Fit the left front turn signal light lead in the space between the auxiliary light and the headlight upper bracket.
F. Fasten the right front turn signal light lead and auxiliary light lead with the plastic band. Point the end of the plastic band outward.
G. Fasten the main switch lead and right handlebar switch lead with the holder. The leads may be routed in any order.
H. Secure the holder by inserting the projection on the holder into the hole in the electrical components tray.
I. Route the main switch lead, left handlebar switch lead, and right handlebar switch lead in any order.

Engine (top view)

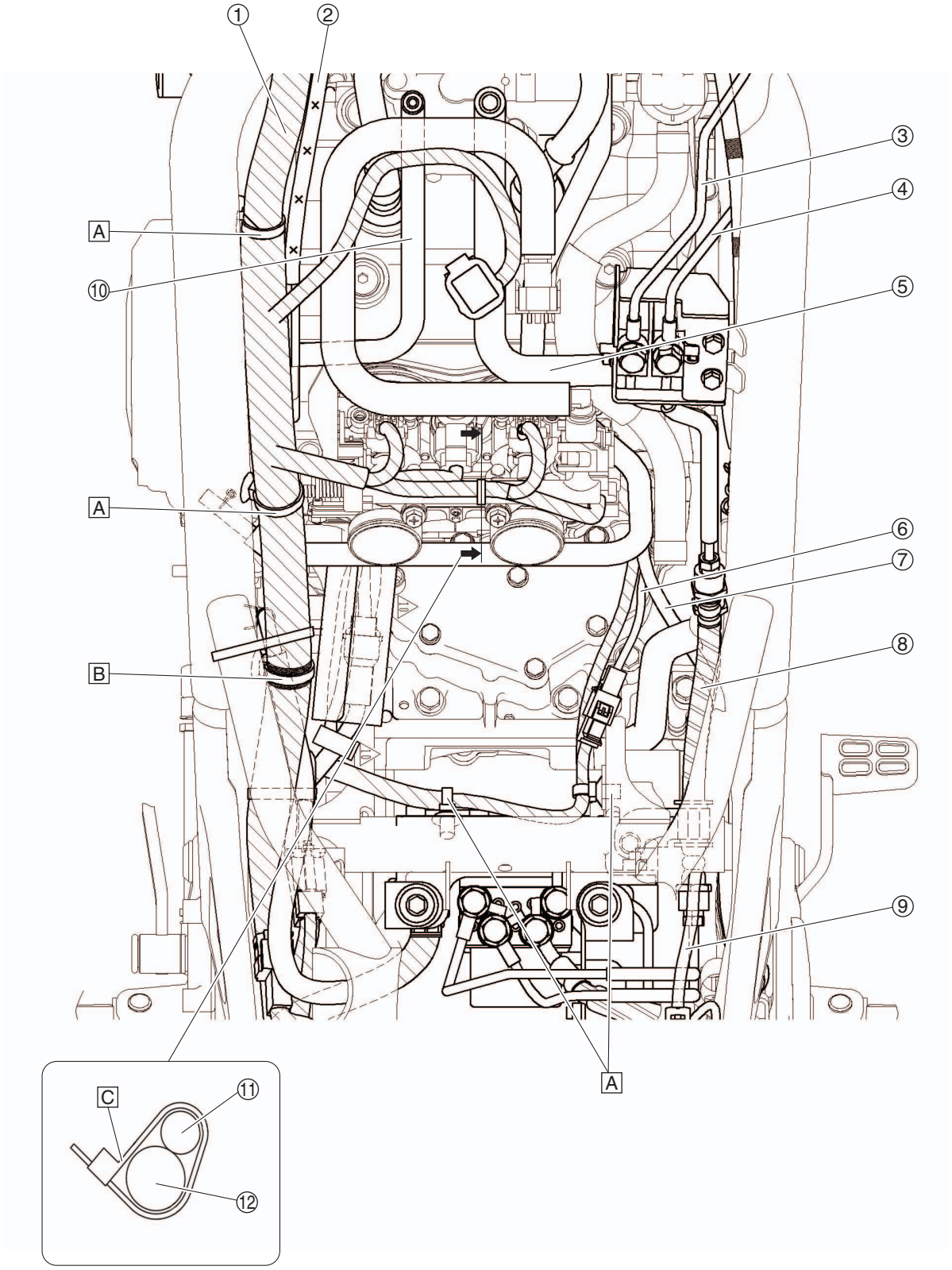

1. Wire harness
2. Throttle cable (accelerator cable)
3. Front brake hose (brake hose joint to brake caliper)
4. Front brake hose (brake master cylinder to brake hose joint)
5. Fuel tank overflow hose
6. Negative battery sub-wire harness
7. O_2 sensor lead
8. Front brake hose (hydraulic unit to brake hose joint)
9. Rear brake light switch lead
10. Fuel tank breather hose
11. Fuel injector lead
12. Fuel rail

A. Insert the projection on the wire harness holder into the hole in the frame.
B. Insert the projection on the holder at the white tape on the wire harness into the frame hole shown in the illustration.
C. Fasten the fuel injector lead at the white tape to the fuel rail with a plastic locking tie. Face the buckle of the plastic locking tie rearward with the end pointing downward. Cut off the excess end of the plastic locking tie to 3 mm (0.12 in) or less.

Rear fender (top view)

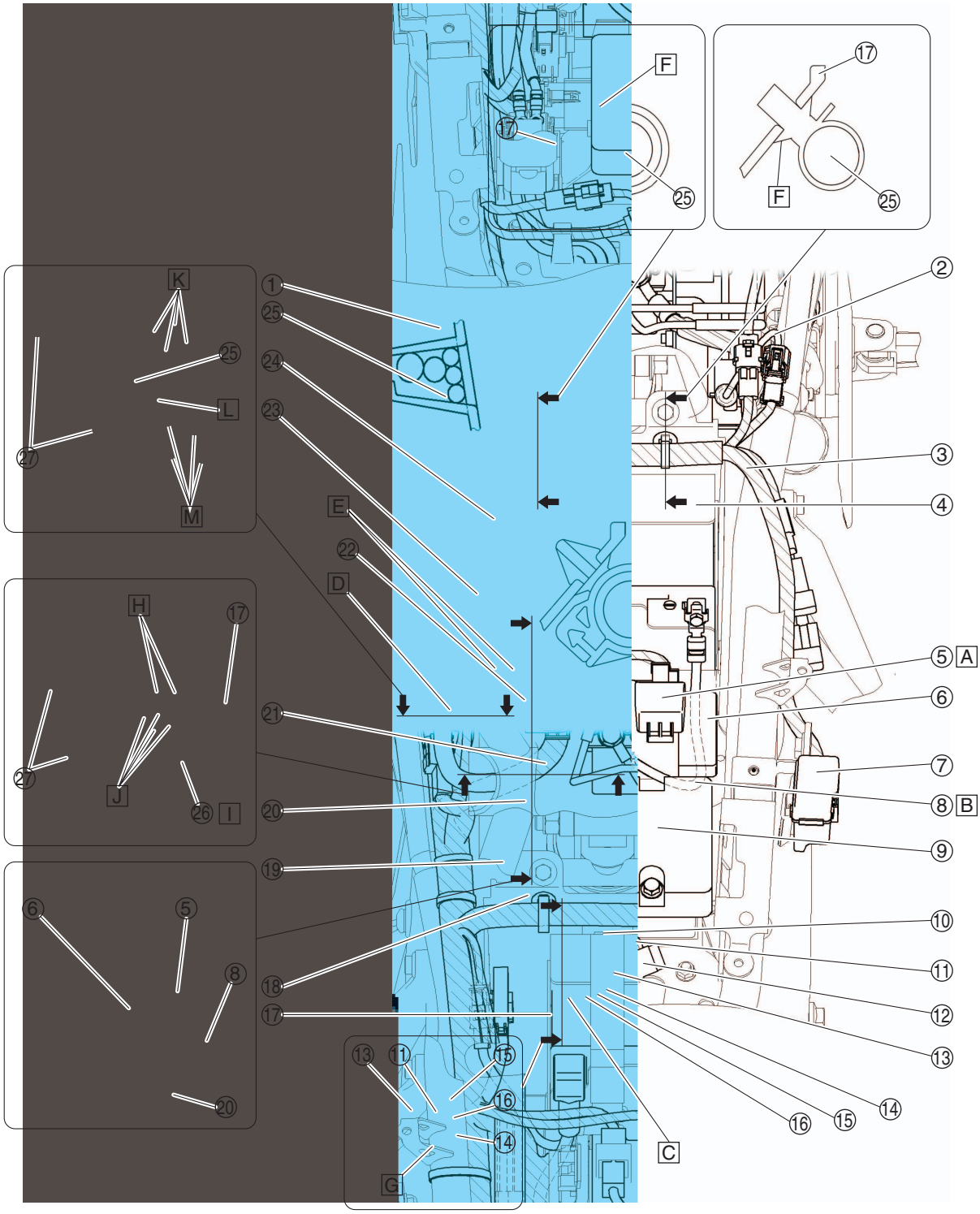

1. Gear position switch coupler
2. Rear wheel sensor lead
3. Fuse box lead
4. Battery
5. Turn signal relay
6. ECU (Engine Control Unit)
7. Fuse box
8. Negative battery sub-wire harness
9. Rectifier/regulator
10. Yamaha diagnostic tool coupler
11. Yamaha diagnostic tool coupler lead
12. ABS test coupler
13. ABS test coupler lead
14. Rear turn signal light lead (right turn signal light)
15. License plate light lead
16. Rear turn signal light lead (left turn signal light)
17. Rear fender
18. Starter relay
19. Rectifier/regulator lead
20. Positive battery lead
21. Starting circuit cut-off relay
22. ECU (Engine Control Unit) lead
23. Fuse box lead (ABS)
24. Fuse box (ABS)
25. Wire harness
26. Starting circuit cut-off relay lead
27. Frame

A. Fit the turn signal relay into the hole in the ECU band.
B. Route the negative battery sub-wire harness under the ECU (engine control unit).
C. Route the rear turn signal light leads, license plate light lead, and Yamaha diagnostic tool coupler lead through the guide on the rear fender.
D. Fasten the wire harness to the frame with a plastic locking tie. Position the plastic locking tie to the front of where the leads branch off from the wire harness.
E. Position the portions of the rear turn signal light leads that are covered by the lead cover under the turn signal relay lead and negative battery sub-wire harness and over the ECU (engine control unit) lead.
F. Insert the projection on the wire harness holder into the hole in the rear fender.
G. Route the license plate light lead, rear turn signal light leads (right and left), Yamaha diagnostic tool coupler lead, and ABS test coupler lead in any order.
H. Route the starter motor lead and negative battery sub-wire harness in any order.
I. Route the starting circuit cut-off relay lead under the rear turn signal light leads, tail/brake light lead, and license plate light lead.
J. Route the rear turn signal light leads, tail/brake light lead, and license light lead in any order.
K. Route the rear turn signal light leads in any order.
L. Fasten the wire harness to the frame with a plastic locking tie as shown in the illustration. Face the buckle of the plastic locking tie outward with the end pointing downward. Cut off the excess end of the plastic locking tie to 3 mm (0.12 in) or less.
M. Route the starter motor lead, negative battery sub-wire harness, tail/brake light lead, and wire harness in any order.

Front brake (right side view)

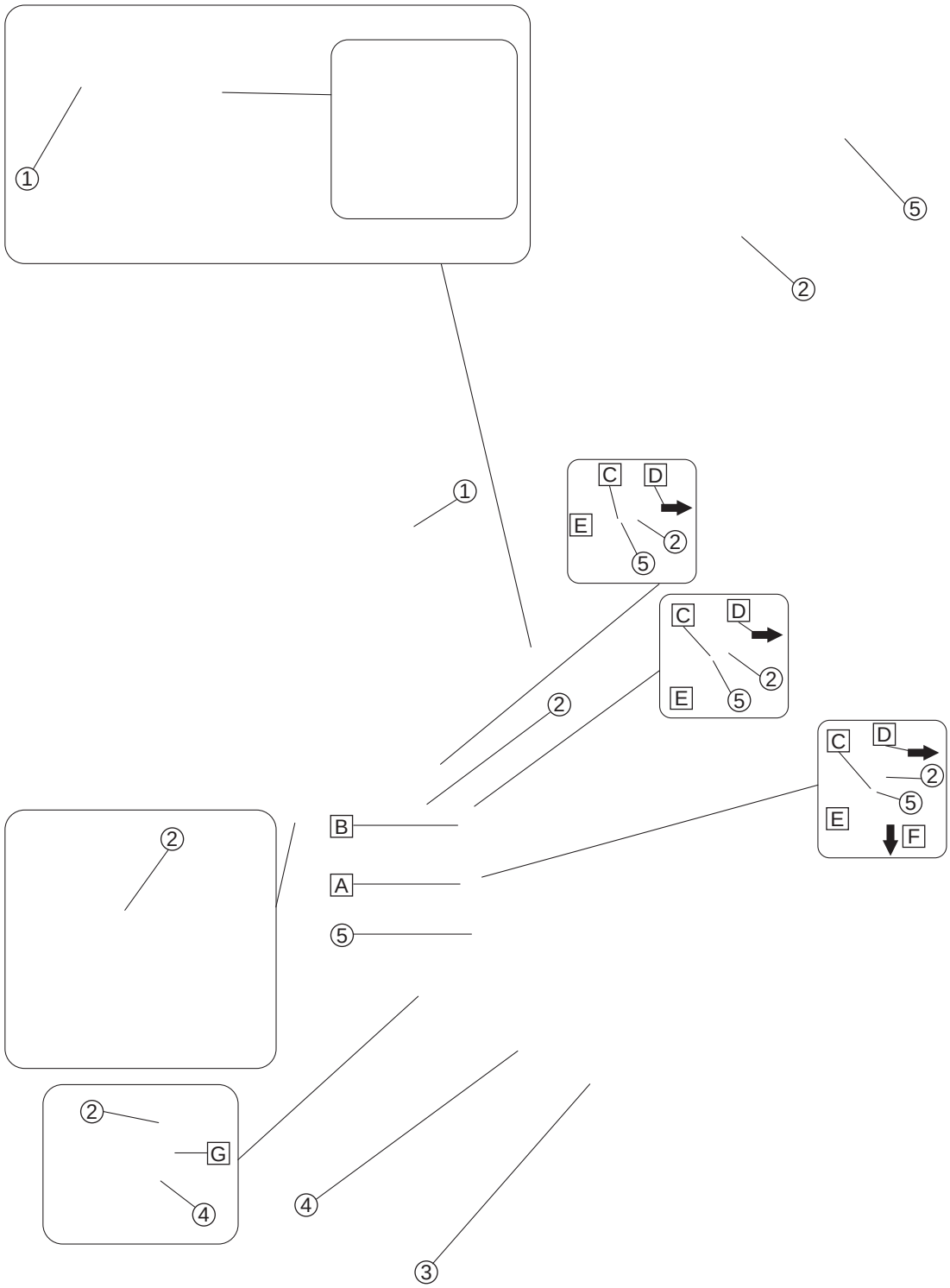

1. Radiator
2. Radiator outlet hose
3. Coolant reservoir hose
4. Coolant reservoir cap
5. Coolant reservoir breather hose
6. Coolant reservoir
7. Radiator inlet hose
8. Coolant hose

A. 13°
B. Face the white paint mark on the coolant reservoir hose upward.
C. 40°
D. 3 mm (0.12 in) or more. Make sure not to install the hose clamp on the raised portion of the hose fitting.
E. Downward
F. Install the coolant reservoir hose until the end of the hose contacts the raised portion of the hose fitting.
G. 10 mm (0.39 in) or more
H. 5 mm (0.20 in)
I. Install the pipe up to the groove in the coolant reservoir cap.
J. Install the coolant reservoir breather hose completely onto the hose fitting of the coolant reservoir.
K. Left side
L. Install the coolant hose so that the end of the hose is positioned as shown in the illustration.

Radiator (left side view)

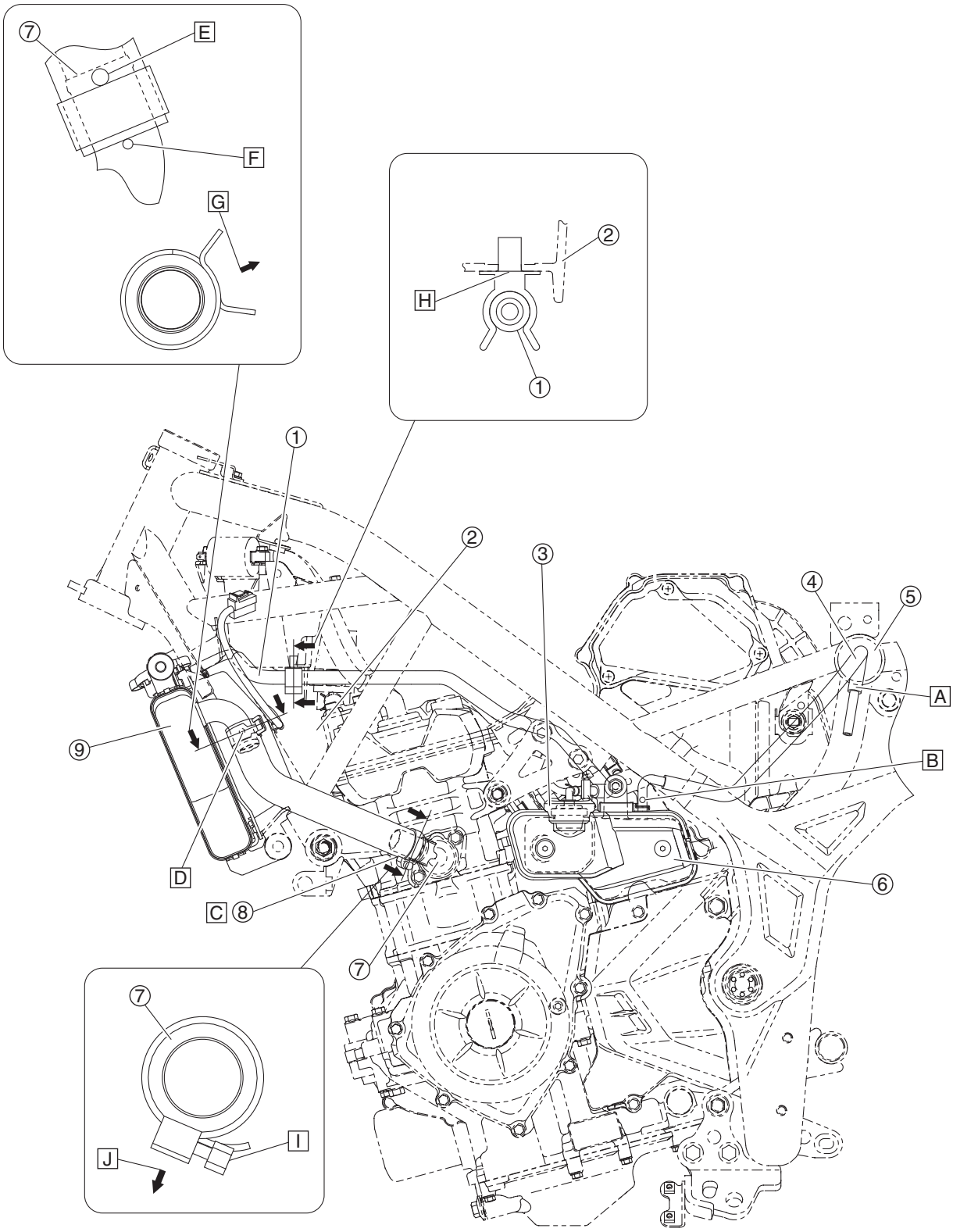

1. Coolant reservoir hose
2. Electrical components tray
3. Coolant reservoir cap
4. Coolant reservoir breather hose
5. Frame
6. Coolant reservoir
7. Thermostat cover
8. Radiator inlet hose
9. Radiator

A. Insert the end of the coolant reservoir breather hose into the frame pipe. Make sure that the end of the hose protector on the coolant reservoir breather hose contacts the edge of the hole in the frame.
B. Face the white paint mark on the coolant reservoir breather hose outward.
C. Install the radiator inlet hose completely onto the hose fitting of the thermostat cover.
D. Connect the end of the radiator inlet hose that is identified by the white paint mark to the radiator.
E. White paint mark
F. Install the radiator inlet hose up to the projection on the hose fitting.
G. Rearward
H. Insert the projection on the holder into the hole in the electrical components tray.
I. Face the fastener of the screw clamp downward with the screw head facing outward.
J. Downward

Radiator (right side view)

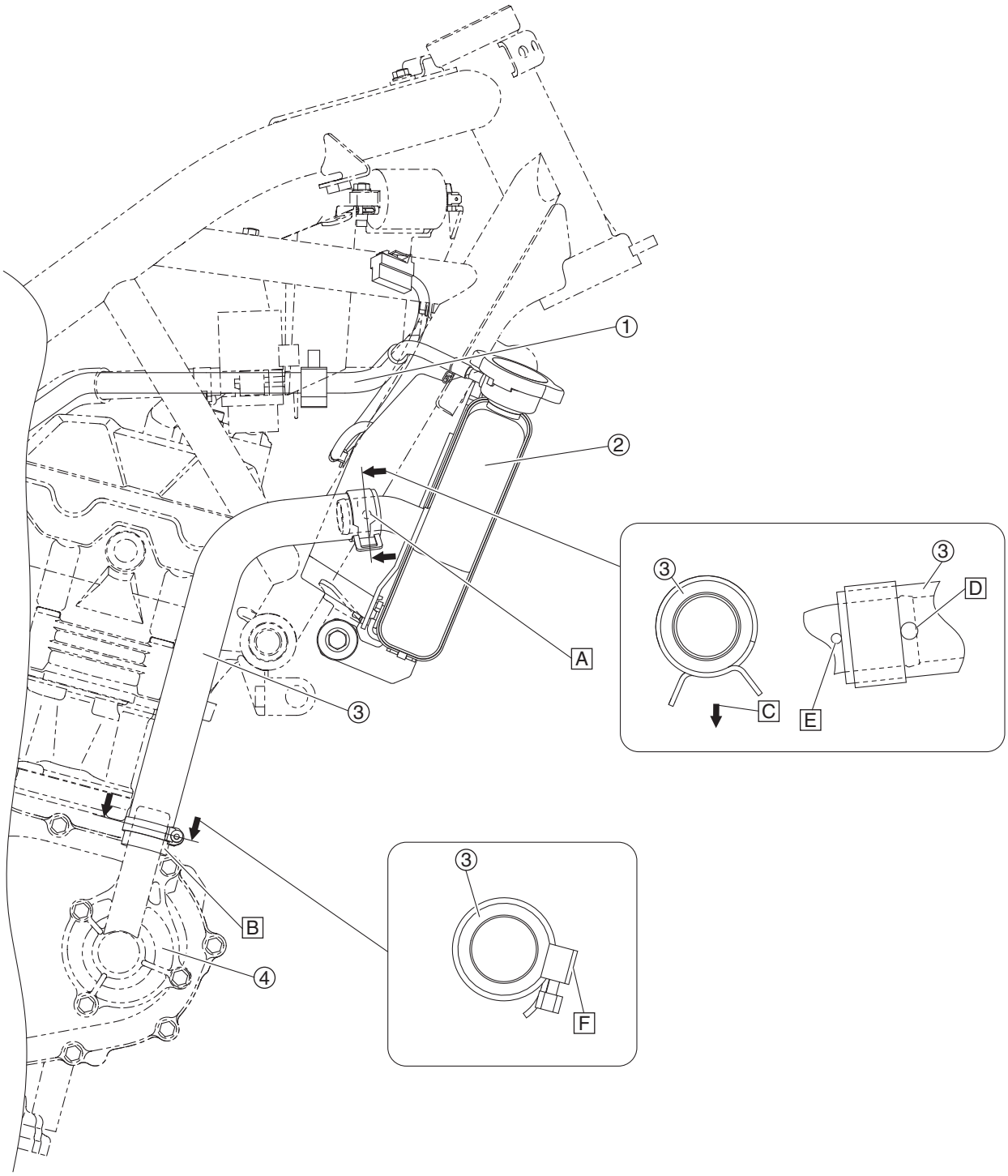

1. Coolant reservoir hose
2. Radiator
3. Radiator outlet hose
4. Water pump housing

A. Connect the end of the radiator outlet hose that is identified by the white paint mark to the radiator.
B. Install the radiator outlet hose completely onto the hose fitting of the water pump housing.
C. Downward
D. White paint mark
E. Install the radiator outlet hose up to the projection on the hose fitting.
F. Face the fastener of the screw clamp forward with the screw head facing outward.

PERIODIC CHECKS AND ADJUSTMENTS

PERIODIC MAINTENANCE 3-1
INTRODUCTION 3-1
PERIODIC MAINTENANCE CHART FOR THE EMISSION CONTROL SYSTEM 3-1
GENERAL MAINTENANCE AND LUBRICATION CHART 3-1
CHECKING THE FUEL LINE 3-4
CHECKING THE SPARK PLUGS 3-4
ADJUSTING THE VALVE CLEARANCE 3-5
CHECKING THE ENGINE IDLING SPEED 3-8
SYNCHRONIZING THE THROTTLE BODIES 3-8
CHECKING THE THROTTLE BODY JOINT 3-10
CHECKING THE EXHAUST SYSTEM 3-10
ADJUSTING THE EXHAUST GAS VOLUME 3-11
CHECKING THE CRANKCASE BREATHER HOSE 3-11
CHECKING THE AIR INDUCTION SYSTEM 3-11
REPLACING THE AIR FILTER ELEMENT AND CLEANING THE CHECK HOSE 3-11
ADJUSTING THE CLUTCH LEVER FREE PLAY 3-12
CHECKING THE BRAKE OPERATION 3-13
CHECKING THE FRONT BRAKE PADS 3-13
CHECKING THE REAR BRAKE PADS 3-13
CHECKING THE FRONT BRAKE HOSES 3-13
CHECKING THE REAR BRAKE HOSE 3-13
BLEEDING THE HYDRAULIC BRAKE SYSTEM (ABS) 3-14
CHECKING THE BRAKE FLUID LEVEL 3-15
CHECKING THE WHEELS 3-15
CHECKING THE TIRES 3-15
CHECKING THE WHEEL BEARINGS 3-17
CHECKING THE SWINGARM OPERATION 3-17
LUBRICATING THE SWINGARM PIVOT 3-17
ADJUSTING THE DRIVE CHAIN SLACK 3-17
LUBRICATING THE DRIVE CHAIN 3-18
CHECKING AND ADJUSTING THE STEERING HEAD 3-18
LUBRICATING THE STEERING HEAD 3-19
CHECKING THE CHASSIS FASTENERS 3-19
LUBRICATING THE BRAKE LEVER 3-20
LUBRICATING THE PEDAL 3-20
LUBRICATING THE CLUTCH LEVER 3-20
CHECKING THE SIDESTAND 3-20
LUBRICATING THE SIDESTAND 3-20
CHECKING THE SIDESTAND SWITCH 3-20
CHECKING THE FRONT FORK 3-20
CHECKING THE REAR SHOCK ABSORBER ASSEMBLY 3-20
ADJUSTING THE REAR SHOCK ABSORBER ASSEMBLY 3-20
CHECKING THE ENGINE OIL LEVEL 3-21
CHANGING THE ENGINE OIL 3-22
CHECKING THE COOLANT LEVEL 3-23
CHECKING THE COOLING SYSTEM 3-24
CHANGING THE COOLANT 3-24
CHECKING THE BRAKE LIGHT SWITCHES 3-26

ADJUSTING THE REAR BRAKE LIGHT SWITCH 3-26
CHECKING AND LUBRICATING THE CABLES 3-26
CHECKING THE THROTTLE GRIP OPERATION 3-26
CHECKING THE SWITCHES, LIGHTS AND SIGNALS 3-27
REPLACING THE HEADLIGHT BULBS 3-27
ADJUSTING THE HEADLIGHT BEAM 3-29

EAS20022
PERIODIC MAINTENANCE

EAS30022
INTRODUCTION
This chapter includes all information necessary to perform recommended checks and adjustments. If followed, these preventive maintenance procedures will ensure more reliable vehicle operation, a longer service life and reduce the need for costly overhaul work. This information applies to vehicles already in service as well as to new vehicles that are being prepared for sale. All service technicians should be familiar with this entire chapter.

EAS30614
PERIODIC MAINTENANCE CHART FOR THE EMISSION CONTROL SYSTEM

TIP

- **The annual checks must be performed every year, except if a kilometer-based maintenance, or for the UK, a mileage-based maintenance, is performed instead.**
- From 50000 km (30000 mi), repeat the maintenance intervals starting from 10000 km (6000 mi).
- Items marked with an asterisk should be performed by a Yamaha dealer as they require special tools, data and technical skills.

NO.		ITEM	CHECK OR MAINTENANCE JOB	ODOMETER READING					ANNUAL CHECK
				1000 km (600 mi)	10000 km (6000 mi)	20000 km (12000 mi)	30000 km (18000 mi)	40000 km (24000 mi)	
1	*	**Fuel line**	• Check fuel hoses for cracks or damage.		√	√	√	√	√
2	*	**Spark plugs**	• Check condition. • Clean and regap.		√		√		
			• Replace.			√		√	
3	*	**Valves**	• Check valve clearance. • Adjust.	Every 40000 km (24000 mi)					
4	*	**Fuel injection system**	• Adjust synchronization.		√	√	√	√	√
5	*	**Muffler and exhaust pipe**	• Check the screw clamp(s) for looseness.	√	√	√	√	√	
6	*	**Air induction system**	• Check the air cut-off valve, reed valve, and hose for damage. • Replace any damaged parts if necessary.		√	√	√	√	√

EAS30615
GENERAL MAINTENANCE AND LUBRICATION CHART

TIP

- **The annual checks must be performed every year, except if a kilometer-based maintenance, or for the UK, a mileage-based maintenance, is performed instead.**
- From 50000 km (30000 mi), repeat the maintenance intervals starting from 10000 km (6000 mi).
- Items marked with an asterisk should be performed by a Yamaha dealer as they require special tools, data and technical skills.

NO.		ITEM	CHECK OR MAINTENANCE JOB	ODOMETER READING					ANNUAL CHECK
				1000 km (600 mi)	10000 km (6000 mi)	20000 km (12000 mi)	30000 km (18000 mi)	40000 km (24000 mi)	
1		**Air filter element**	• Replace.			√		√	
2		**Air filter check hose**	• Clean.	√	√	√	√	√	
3		**Clutch**	• Check operation. • Adjust.	√	√	√	√	√	

NO.		ITEM	CHECK OR MAINTENANCE JOB	ODOMETER READING					ANNUAL CHECK
				1000 km (600 mi)	10000 km (6000 mi)	20000 km (12000 mi)	30000 km (18000 mi)	40000 km (24000 mi)	
4	*	**Front brake**	• Check operation, fluid level and vehicle for fluid leakage.	√	√	√	√	√	√
			• Replace brake pads.	Whenever worn to the limit					
5	*	**Rear brake**	• Check operation, fluid level and vehicle for fluid leakage.	√	√	√	√	√	√
			• Replace brake pads.	Whenever worn to the limit					
6	*	**Brake hoses**	• Check for cracks or damage. • Check for correct routing and clamping.		√	√	√	√	√
			• Replace.	Every 4 years					
7	*	**Brake fluid**	• Replace.	Every 2 years					
8	*	**Wheels**	• Check runout and for damage.		√	√	√	√	
9	*	**Tires**	• Check tread depth and for damage. • Replace if necessary. • Check air pressure. • Correct if necessary.		√	√	√	√	√
10	*	**Wheel bearings**	• Check bearings for looseness or damage.		√	√	√	√	
11	*	**Swingarm**	• Check operation and for excessive play.		√	√	√	√	
			• Lubricate with lithium-soap-based grease.	Every 50000 km (30000 mi)					
12		**Drive chain**	• Check chain slack, alignment and condition. • Adjust and lubricate chain with a special O-ring chain lubricant thoroughly.	Every 800 km (500 mi) and after washing the motorcycle, riding in the rain or riding in wet areas					
13	*	**Steering bearings**	• Check bearing play and steering for roughness.	√	√	√	√	√	
			• Lubricate with lithium-soap-based grease.	Every 20000 km (12000 mi)					
14	*	**Chassis fasteners**	• Make sure that all nuts, bolts and screws are properly tightened.		√	√	√	√	√
15		**Brake lever pivot shaft**	• Lubricate with silicone grease.		√	√	√	√	√
16		**Brake pedal pivot shaft**	• Lubricate with lithium-soap-based grease.		√	√	√	√	√
17		**Clutch lever pivot shaft**	• Lubricate with lithium-soap-based grease.		√	√	√	√	√
18		**Shift pedal pivot shaft**	• Lubricate with lithium-soap-based grease.		√	√	√	√	√
19		**Sidestand**	• Check operation. • Lubricate with lithium-soap-based grease.		√	√	√	√	√
20	*	**Sidestand switch**	• Check operation.	√	√	√	√	√	√
21	*	**Front fork**	• Check operation and for oil leakage.		√	√	√	√	
22	*	**Shock absorber assembly**	• Check operation and shock absorber for oil leakage.		√	√	√	√	
23		**Engine oil**	• Change.	√	When the oil change indicator flashes				
			• Check oil level and vehicle for oil leakage.	Every 5000 km (3000 mi)					√
24		**Engine oil filter cartridge**	• Replace.	√		√		√	

NO.		ITEM	CHECK OR MAINTENANCE JOB	ODOMETER READING					ANNUAL CHECK
				1000 km (600 mi)	10000 km (6000 mi)	20000 km (12000 mi)	30000 km (18000 mi)	40000 km (24000 mi)	
25	*	**Cooling system**	• Check coolant level and vehicle for coolant leakage.		√	√	√	√	√
			• Change coolant.	Every 3 years					
26	*	**Front and rear brake switches**	• Check operation.	√	√	√	√	√	√
27		**Moving parts and cables**	• Lubricate.		√	√	√	√	√
28	*	**Throttle grip**	• Check operation. • Check throttle grip free play, and adjust if necessary. • Lubricate cable and grip housing.		√	√	√	√	√
29	*	**Lights, signals and switches**	• Check operation. • Adjust headlight beam.	√	√	√	√	√	√

TIP

- Air filter
  - This model's air filter is equipped with a disposable oil-coated paper element, which must not be cleaned with compressed air to avoid damaging it.
  - The air filter element needs to be replaced more frequently when riding in unusually wet or dusty areas.
- Hydraulic brake service
  - Regularly check and, if necessary, correct the brake fluid level.
  - Every two years replace the internal components of the brake master cylinders and calipers, and change the brake fluid.
  - Replace the brake hoses every four years and if cracked or damaged.

EAS30619
CHECKING THE FUEL LINE

1. Remove:
   - Rider seat
     Refer to “GENERAL CHASSIS (1)” on page 4-1.
   - Side panel assemblies
     Refer to “GENERAL CHASSIS (2)” on page 4-3.
   - Fuel tank cover assembly
     Refer to “GENERAL CHASSIS (3)” on page 4-8.
2. Remove:
   - Front fuel tank bracket bolts (frame) “1”
   - Rear fuel tank bracket bolts (frame) “2”

ECA20070
NOTICE

When lifting up the fuel tank, be careful not to pull the fuel tank overflow hose and fuel tank breather hose.

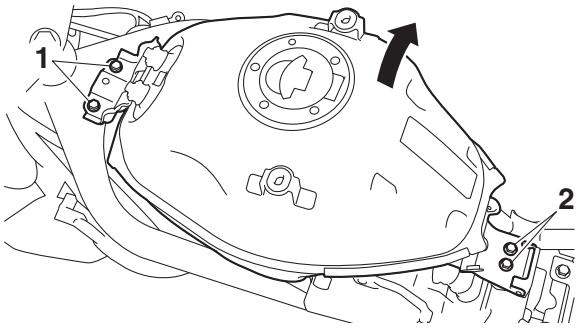

3. Check:
   - Fuel hose “1”
   - Fuel tank breather hose “2”
   - Fuel tank overflow hose “3”
     Cracks/damage → Replace.
     Loose connection → Connect properly.

ECA16950
NOTICE

Make sure the fuel tank breather/overflow hose is routed correctly.

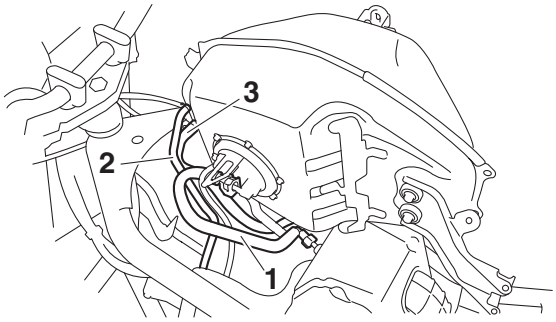

4. Install:
   - Front fuel tank bracket bolt (frame)
   - Rear fuel tank bracket bolt (frame)

Rear fuel tank bracket bolt (frame)
12 Nm (1.2 m·kgf, 8.7 ft·lbf)
Front fuel tank bracket bolt (frame)
12 Nm (1.2 m·kgf, 8.7 ft·lbf)

5. Install:
   - Fuel tank cover assembly
     Refer to “GENERAL CHASSIS (3)” on page 4-8.
   - Side panel assemblies
     Refer to “GENERAL CHASSIS (2)” on page 4-3.
   - Rider seat
     Refer to “GENERAL CHASSIS (1)” on page 4-1.

EAS30620
CHECKING THE SPARK PLUGS

The following procedure applies to all of the spark plugs.

1. Remove:
   - Rider seat
     Refer to “GENERAL CHASSIS (1)” on page 4-1.
   - Side panel assemblies
     Refer to “GENERAL CHASSIS (2)” on page 4-3.
   - Fuel tank cover assembly
     Refer to “GENERAL CHASSIS (3)” on page 4-8.
   - Fuel tank
     Refer to “FUEL TANK” on page 7-1.
2. Disconnect:
   - Spark plug caps
3. Remove:
   - Spark plugs

ECA13320
NOTICE

Before removing the spark plugs, blow away any dirt accumulated in the spark plug wells with compressed air to prevent it from falling into the cylinders.

4. Check:
   - Spark plug type
     Incorrect → Change.

Manufacturer/model
NGK/CR8E

5. Check:
   - Electrode “1”
     Damage/wear → Replace the spark plug.

- Insulator “2”
  Abnormal color → Replace the spark plug.
  Normal color is medium-to-light tan.

6. Clean:
   - Spark plug
     (with a spark plug cleaner or wire brush)
7. Measure:
   - Spark plug gap “a”
     (with a wire thickness gauge)
     Out of specification → Regap.

	Spark plug gap **0.7–0.8 mm (0.028–0.031 in)**

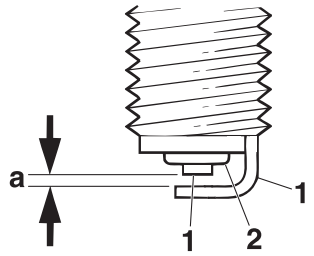

8. Install:
   - Spark plugs

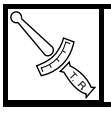	**Spark plug** **13 Nm (1.3 m·kgf, 9.4 ft·lbf)**

TIP

Before installing the spark plug, clean the spark plug and gasket surface.

9. Connect:
   - Spark plug caps
10. Install:
    - Fuel tank
      Refer to “FUEL TANK” on page 7-1.
    - Fuel tank cover assembly
      Refer to “GENERAL CHASSIS (3)” on page 4-8.
    - Side panel assemblies
      Refer to “GENERAL CHASSIS (2)” on page 4-3.
    - Rider seat
      Refer to “GENERAL CHASSIS (1)” on page 4-1.

EAS30622

ADJUSTING THE VALVE CLEARANCE

The following procedure applies to all of the valves.

TIP

Valve clearance adjustment should be made on a cold engine, at room temperature.

1. Remove:
   - Rider seat
     Refer to “GENERAL CHASSIS (1)” on page 4-1.
   - Side panel assemblies
     Refer to “GENERAL CHASSIS (2)” on page 4-3.
   - Fuel tank cover assembly
     Refer to “GENERAL CHASSIS (3)” on page 4-8.
   - Fuel tank
     Refer to “FUEL TANK” on page 7-1.
   - Air cut-off valve/Reed valve
     Refer to “AIR INDUCTION SYSTEM” on page 7-15.
2. Disconnect:
   - Spark plug cap
     Refer to “CAMSHAFTS” on page 5-13.
3. Remove:
   - Spark plugs
   - Cylinder head cover
   - Cylinder head cover gasket
     Refer to “CAMSHAFTS” on page 5-13.
4. Remove:
   - Crankshaft end cover “1”
   - Timing mark accessing bolt “2”

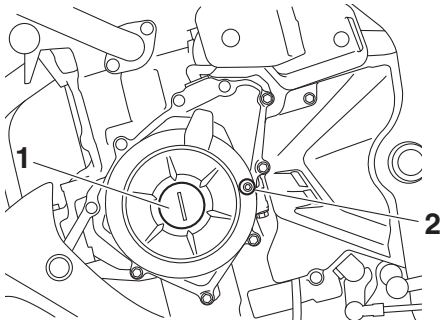

5. Measure:
   - Valve clearance
     Out of specification → Adjust.

	Valve clearance (cold) **Intake** **0.11–0.18 mm (0.0043–0.0071 in)** **Exhaust** **0.21–0.30 mm (0.0083–0.0118 in)**

TIP

- If the valve clearance is incorrect, record the measured reading.

• Measure the valve clearance in the following sequence.

Valve clearance measuring sequence
Cylinder #1 → #2

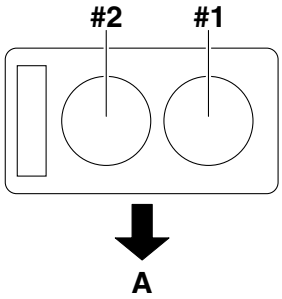

A. Front

▼▼▼▼▼▼▼▼▼▼▼▼▼▼▼▼▼▼▼▼▼▼▼▼▼▼▼▼▼▼▼▼▼▼

a. Turn the crankshaft counterclockwise.
b. When piston #1 is at TDC on the compression stroke, align the TDC mark "a" on the generator rotor with the slots "b" in the generator cover.

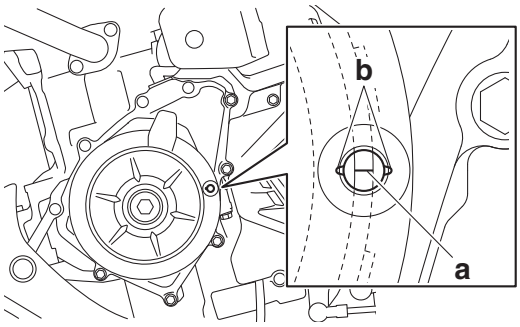

c. Measure the valve clearance with a thickness gauge "1".

Thickness gauge
90890-03180
Feeler gauge set
YU-26900-9

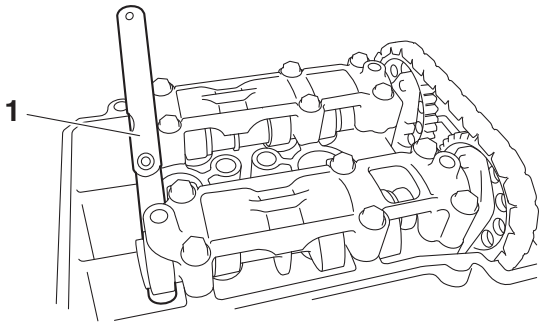

d. Turn the crankshaft counterclockwise 180 degrees.

e. Measure the valve clearance #2 with a thickness gauge.

Thickness gauge
90890-03180
Feeler gauge set
YU-26900-9

▲▲▲▲▲▲▲▲▲▲▲▲▲▲▲▲▲▲▲▲▲▲▲▲▲▲▲▲▲▲▲▲▲▲

6. Remove:
   • Camshaft

TIP

• Refer to "CAMSHAFTS" on page 5-13.
• When removing the timing chain and camshafts, fasten the timing chain with a wire to retrieve it if it falls into the crankcase.

7. Adjust:
   • Valve clearance

▼▼▼▼▼▼▼▼▼▼▼▼▼▼▼▼▼▼▼▼▼▼▼▼▼▼▼▼▼▼▼▼▼▼

a. Remove the valve lifter "1" and the valve pad "2" with a valve lapper "3".

Valve lapper
90890-04101
Valve lapping tool
YM-A8998

TIP

• Cover the timing chain opening with a rag to prevent the valve pad from falling into the crankcase.
• Make a note of the position of each valve lifter "1" and valve pad "2" so that they can be installed in the correct place.

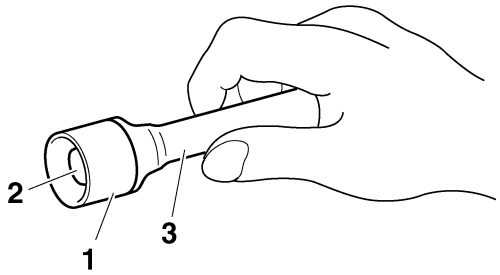

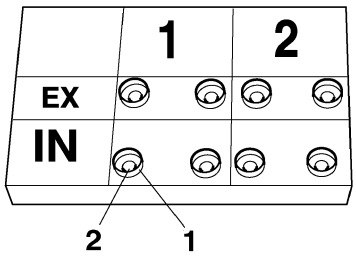

b. Calculate the difference between the specified valve clearance and the measured valve clearance.
   Example:
   Specified valve clearance = 0.11–0.18 mm (0.0043–0.0071 in)
   Measured valve clearance = 0.25 mm (0.0098 in)
   0.25 mm (0.0098 in)–0.18 mm (0.0071 in) = 0.07 mm (0.0028 in)
c. Check the thickness of the current valve pad.

TIP

The thickness “a” of each valve pad is marked in hundredths of millimeters on the side that touches the valve lifter.

Example:
If the valve pad is marked “158”, the pad thickness is 1.58 mm (0.0622 in).

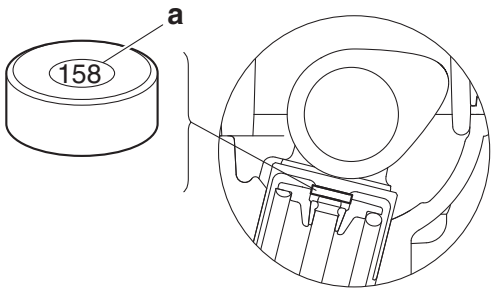

d. Calculate the sum of the values obtained in steps (b) and (c) to determine the required valve pad thickness and the valve pad number.
   Example:
   1.58 mm (0.0622 in) + 0.07 mm (0.0028 in) = 1.65 mm (0.0649 in)
   The valve pad number is 165.
e. Round off the valve pad number according to the following table, and then select the suitable valve pad.

Last digit	Rounded value
0, 1, 2	0
3, 4, 5, 6	5
7, 8, 9	10

TIP

Refer to the following table for the available valve pads.

Valve pad range	No. 150–240
Valve pad thickness	1.50–2.40 mm (0.0590–0.0944 in)
Available valve pads	19 thicknesses in 0.050 mm (0.0020 in) increments

   Example:
   Valve pad number = 165
   Rounded value = 165
   New valve pad number = 165
f. Install the new valve pad “1” and the valve lifter “2”.

TIP

- Lubricate the valve lifter with engine oil.
- Install the valve lifter and the valve pad in the correct place.
- The valve lifter must turn smoothly when rotated by hand.

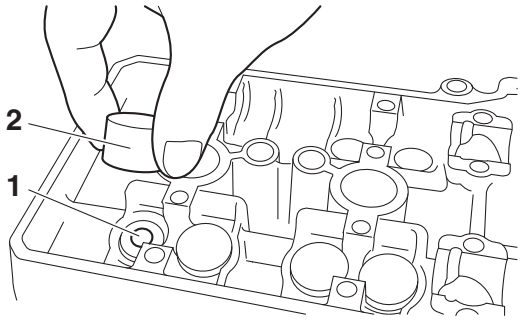

g. Install the exhaust and intake camshafts, timing chain and camshaft caps.

Camshaft cap bolt
10 Nm (1.0 m·kgf, 7.2 ft·lbf)

TIP

- Refer to “CAMSHAFTS” on page 5-13.
- Lubricate the camshaft lobes and camshaft journals with molybdenum disulfide oil.
- First, install the exhaust camshaft.
- Align the camshafts sprocket marks with the cylinder head edge.

- Turn the crankshaft counterclockwise several full turns to seat the parts.

h. Measure the valve clearance again.
i. If the valve clearance is still out of specification, repeat all of the valve clearance adjustment steps until the specified clearance is obtained.

▲▲▲▲▲▲▲▲▲▲▲▲▲▲▲▲▲▲▲▲▲▲▲▲▲▲▲▲▲▲▲▲▲▲

8. Install:
   - All removed parts

TIP

For installation, reverse the removal procedure.

EAS31017

CHECKING THE ENGINE IDLING SPEED

TIP

Prior to checking the engine idling speed, the throttle body synchronization should be adjusted properly, the air filter element should be clean, and the engine should have adequate compression.

1. Start the engine and let it warm up for several minutes.
2. Check:
   - Engine idling speed
     Out of specification → Go to next step.

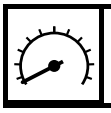	**Engine idling speed** **1300–1500 r/min**

3. Check:
   - ISC (idle speed control) learning value
     "00" or "01" → Check the intake system.
     "02" → Clean the ISC (idle speed control) unit.
     Refer to "CHECKING THE THROTTLE BODIES AND ISC (IDLE SPEED CONTROL) UNIT" on page 7-8.

▼▼▼▼▼▼▼▼▼▼▼▼▼▼▼▼▼▼▼▼▼▼▼▼▼▼▼▼▼▼▼▼▼▼

a. Connect the Yamaha diagnostic tool.
   Use the diagnostic code number "67".
   Refer to "SELF-DIAGNOSTIC FUNCTION AND DIAGNOSTIC CODE TABLE" on page 9-5.

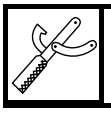	**Yamaha diagnostic tool** **90890-03231**

b. Check the ISC (idle speed control) leaning value.

▲▲▲▲▲▲▲▲▲▲▲▲▲▲▲▲▲▲▲▲▲▲▲▲▲▲▲▲▲▲▲▲▲▲

EAS30797

SYNCHRONIZING THE THROTTLE BODIES

TIP

Before synchronizing the throttle bodies, check the following items:
- Valve clearance
- Spark plugs
- Air filter element
- Throttle body joint
- Fuel hose
- Exhaust system
- Crankcase breather hose

Checking the throttle body synchronization

1. Stand the vehicle on a level surface.

TIP

Place the vehicle on a suitable stand.

2. Remove:
   - Rider seat
     Refer to "GENERAL CHASSIS (1)" on page 4-1.
   - Side panel assemblies
     Refer to "GENERAL CHASSIS (2)" on page 4-3.
   - Fuel tank cover assembly
     Refer to "GENERAL CHASSIS (3)" on page 4-8.
   - Fuel tank
     Refer to "FUEL TANK" on page 7-1.
3. Remove:
   - Caps "1"

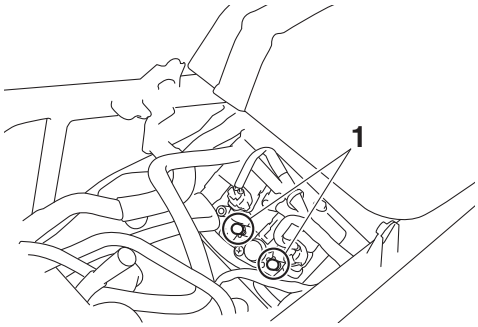

4. Install:
   - Vacuum gauge hose #1 "1"
   - Vacuum gauge hose #2 "2"
   - Vacuum gauge "3"

	Vacuum gauge **90890-03094** **Vacuummate** **YU-44456**

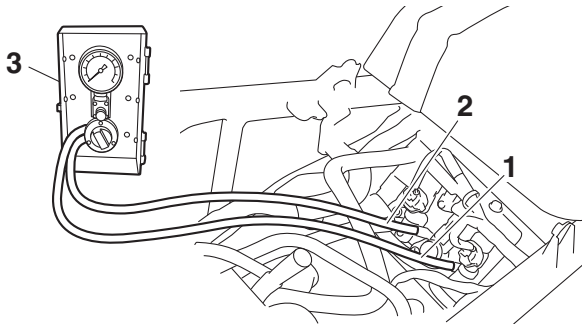

5. Install:
   - Fuel tank
     Refer to “FUEL TANK” on page 7-1.
6. Check:
   - Throttle body synchronization

▼▼▼▼▼▼▼▼▼▼▼▼▼▼▼▼▼▼▼▼▼▼▼▼▼▼▼▼▼▼▼▼▼▼

a. Start the engine, warm it up for several minutes, and then let it run at the specified engine idling speed.

	Engine idling speed **1300–1500 r/min**

b. Check the vacuum pressure.

	The difference in vacuum pressure between the throttle bodies should not exceed 2.0 kPa (15 mmHg).

If out of specification → Adjust the throttle body synchronization.

▲▲▲▲▲▲▲▲▲▲▲▲▲▲▲▲▲▲▲▲▲▲▲▲▲▲▲▲▲▲▲▲▲▲

Adjusting the throttle body synchronization

1. Adjust:
   - Throttle body synchronization

▼▼▼▼▼▼▼▼▼▼▼▼▼▼▼▼▼▼▼▼▼▼▼▼▼▼▼▼▼▼▼▼▼▼

a. Start the engine, warm it up for several minutes, and then let it run at the specified engine idling speed.

	Engine idling speed **1300–1500 r/min**

b. With throttle body #2 as standard, adjust throttle body #1 using the air screw “1”.

TIP

- Turn the bypass air screw using the carburetor angle driver.
- After each step, rev the engine two or three times, each time for less than a second, and check the synchronization again.
- If a bypass air screw was removed, turn the screw in fully and be sure to synchronize the throttle bodies.
- If the throttle body synchronization can not be adjusted using the bypass air screw, clean or replace the throttle bodies.
- The difference in vacuum pressure between the throttle bodies should not exceed 1.33 kPa (10 mmHg).

	Carburetor angle driver 2 **90890-03173**

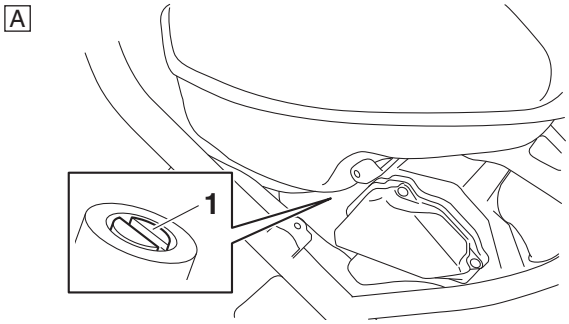

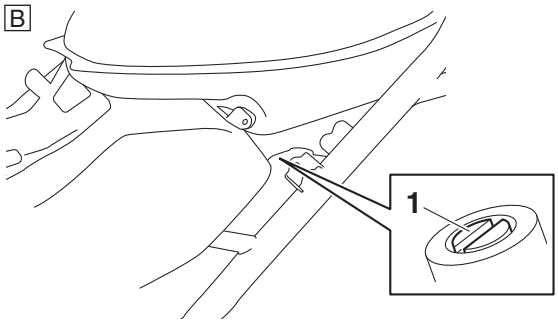

A. Throttle body #1
B. Throttle body #2

▲▲▲▲▲▲▲▲▲▲▲▲▲▲▲▲▲▲▲▲▲▲▲▲▲▲▲▲▲▲▲▲▲▲

2. Stop the engine and remove the measuring equipment.
3. Install:
   - Caps
4. Install:
   - Fuel tank
     Refer to “FUEL TANK” on page 7-1.
   - Fuel tank cover assembly
     Refer to “GENERAL CHASSIS (3)” on page 4-8.
   - Side panel assemblies
     Refer to “GENERAL CHASSIS (2)” on page 4-3.
   - Rider seat
     Refer to “GENERAL CHASSIS (1)” on page 4-1.

5. Adjust:
   - Throttle grip free play
     Refer to "CHECKING THE THROTTLE GRIP OPERATION" on page 3-26.

Throttle grip free play
3.0–5.0 mm (0.12–0.20 in)

EAS31318
CHECKING THE THROTTLE BODY JOINT

1. Remove:
   - Rider seat
     Refer to "GENERAL CHASSIS (1)" on page 4-1.
   - Side panel assemblies
     Refer to "GENERAL CHASSIS (2)" on page 4-3.
   - Fuel tank cover assembly
     Refer to "GENERAL CHASSIS (3)" on page 4-8.
   - Fuel tank
     Refer to "FUEL TANK" on page 7-1.
2. Remove:
   - Throttle bodies
     Refer to "THROTTLE BODIES" on page 7-5.
3. Check:
   - Throttle body joint "1"
     Cracks/damage → Replace.

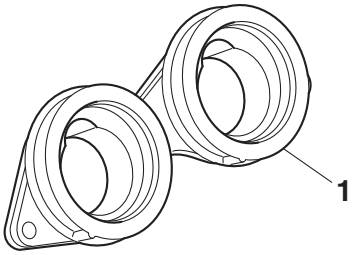

4. Install:
   - Throttle bodies
     Refer to "THROTTLE BODIES" on page 7-5.
5. Install:
   - Fuel tank
     Refer to "FUEL TANK" on page 7-1.
   - Fuel tank cover assembly
     Refer to "GENERAL CHASSIS (3)" on page 4-8.
   - Side panel assemblies
     Refer to "GENERAL CHASSIS (2)" on page 4-3.
   - Rider seat
     Refer to "GENERAL CHASSIS (1)" on page 4-1.

EAS30625
CHECKING THE EXHAUST SYSTEM

1. Remove:
   - Coolant reservoir
     Refer to "RADIATOR" on page 6-1.
   - Footrest assembly (right)
     Refer to "REAR BRAKE" on page 4-47.
2. Check:
   - Exhaust pipe "1"
   - Muffler assembly "2"
     Cracks/damage → Replace.
   - Gasket "3", "4"
     Exhaust gas leaks → Replace.
3. Check:
   Tightening torque
   - Exhaust pipe nuts "5"
   - Exhaust pipe bolt "6"
   - Muffler assembly bolt "7"
   - Exhaust pipe joint bolt "8"

Exhaust pipe nut
15 Nm (1.5 m·kgf, 11 ft·lbf)
Exhaust pipe bolt
20 Nm (2.0 m·kgf, 14 ft·lbf)
Muffler assembly bolt
20 Nm (2.0 m·kgf, 14 ft·lbf)
Exhaust pipe joint bolt
20 Nm (2.0 m·kgf, 14 ft·lbf)

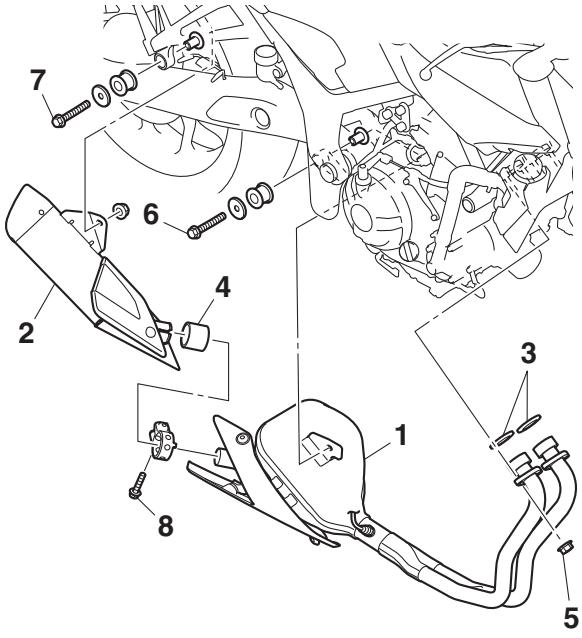

EAS30799
ADJUSTING THE EXHAUST GAS VOLUME

TIP

- Be sure to set the CO density level to standard, and then adjust the exhaust gas volume.
- To adjust the exhaust gas volume, use the CO adjustment mode of the Yamaha diagnostic tool. For more information, refer to the operation manual of the Yamaha diagnostic tool.

1. Connect the Yamaha diagnostic tool to the coupler. For information about connecting the Yamaha diagnostic tool, refer to "YAMAHA DIAGNOSTIC TOOL" on page 8-36.

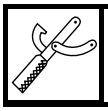	**Yamaha diagnostic tool 90890-03231**

EAS30800
CHECKING THE CRANKCASE BREATHER HOSE

1. Remove:
   - Coolant reservoir
     Refer to "RADIATOR" on page 6-1.
2. Check:
   - Crankcase breather hose "1"
     Cracks/damage → Replace.
     Loose connection → Connect properly.

ECA13450
NOTICE

Make sure the crankcase breather hose is routed correctly.

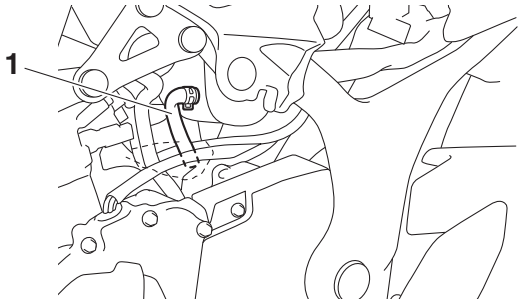

3. Install:
   - Coolant reservoir
     Refer to "RADIATOR" on page 6-1.

EAS30627
CHECKING THE AIR INDUCTION SYSTEM

Refer to "CHECKING THE AIR INDUCTION SYSTEM" on page 7-18.

EAS31130
REPLACING THE AIR FILTER ELEMENT AND CLEANING THE CHECK HOSE

TIP

There is an air filter check hose "1" at the bottom of the air filter case. If dust and/or water collects in this hose, clean the air filter check hose and replace the air filter element.

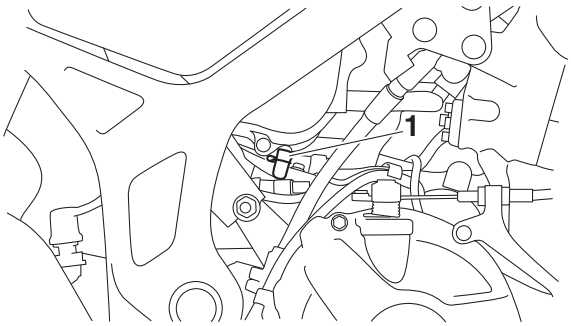

1. Remove:
   - Rider seat
     Refer to "GENERAL CHASSIS (1)" on page 4-1.
   - Side panel assembly (left)
     Refer to "GENERAL CHASSIS (2)" on page 4-3.
   - Air scoop (left)
     Refer to "GENERAL CHASSIS (3)" on page 4-8.
2. Remove:
   - Air filter case side cover (left) "1"
     Refer to "GENERAL CHASSIS (5)" on page 4-15.

TIP

Lift the air filter case cover "2", and then remove the air filter case side cover.

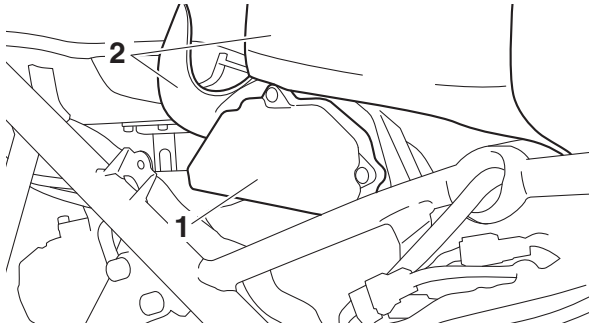

3. Remove:
   - Air filter element "1"

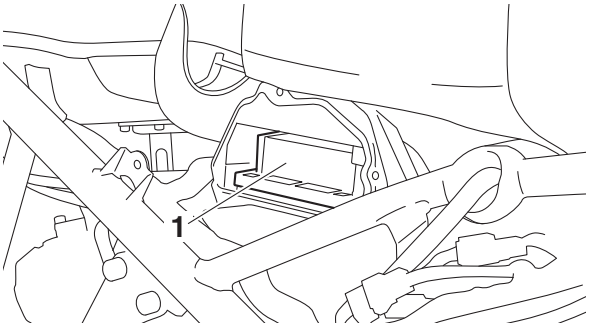

4. Check:
   - Air filter element
     Damage → Replace.

TIP

The air filter needs more frequent service if you are riding in unusually wet or dusty areas.

5. Install:
   - Air filter element
   - Air filter case side cover (left)

Air filter case side cover screw (left)
2.5 Nm (0.25 m·kgf, 1.8 ft·lbf)

ECA20710

NOTICE

Never operate the engine without the air filter element installed. Unfiltered air will cause rapid wear of engine parts and may damage the engine. Operating the engine without the air filter element will also affect throttle body synchronization, leading to poor engine performance and possible overheating.

6. Install:
   - Air scoop (left)
     Refer to "GENERAL CHASSIS (3)" on page 4-8.
   - Side panel assembly (left)
     Refer to "GENERAL CHASSIS (2)" on page 4-3.
   - Rider seat
     Refer to "GENERAL CHASSIS (1)" on page 4-1.

EAS31089

ADJUSTING THE CLUTCH LEVER FREE PLAY

1. Check:
   - Clutch lever free play "a"
     Out of specification → Adjust.

Clutch lever free play
10.0–15.0 mm (0.39–0.59 in)

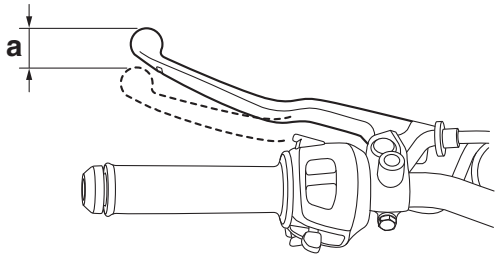

2. Adjust:
   - Clutch lever free play

▼▼▼▼▼▼▼▼▼▼▼▼▼▼▼▼▼▼▼▼▼▼▼▼▼▼▼▼▼▼▼▼▼▼

Handlebar side

a. Loosen the locknut "1".
b. Turn the adjusting bolt "2" in direction "a" or "b" until the specified clutch lever free play is obtained.

Direction "a"
Clutch lever free play is increased.
Direction "b"
Clutch lever free play is decreased.

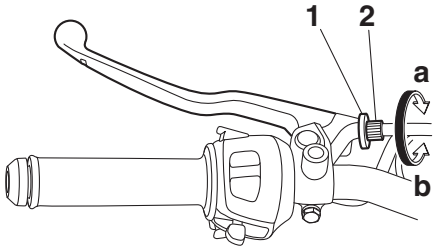

TIP

If the specified clutch lever free play cannot be obtained on the handlebar side of the cable, use the adjusting nut on the engine side.

▲▲▲▲▲▲▲▲▲▲▲▲▲▲▲▲▲▲▲▲▲▲▲▲▲▲▲▲▲▲▲▲▲▲

▼▼▼▼▼▼▼▼▼▼▼▼▼▼▼▼▼▼▼▼▼▼▼▼▼▼▼▼▼▼▼▼▼▼

Engine side

a. Loosen the locknut "1".
b. Turn the adjusting nut "2" in direction "a" or "b" until the specified clutch lever free play is obtained.

Direction "a"
Clutch lever free play is increased.
Direction "b"
Clutch lever free play is decreased.

c. Tighten the locknut "1".

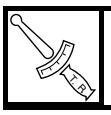	**Clutch cable locknut** **7 Nm (0.7 m·kgf, 5.1 ft·lbf)**

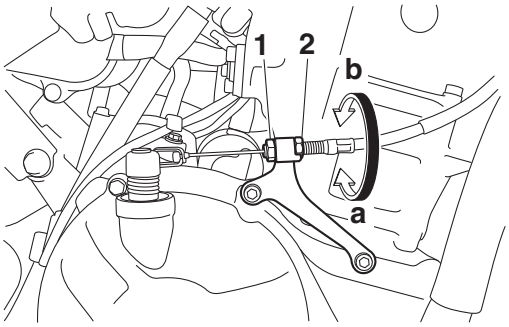

EAS30801
CHECKING THE BRAKE OPERATION

1. Check:
   - Brake operation
     Brake not working properly → Check the brake system.
     Refer to "FRONT BRAKE" on page 4-35 and "REAR BRAKE" on page 4-47.

TIP

Drive on the dry road, operate the front and rear brakes separately and check to see if the brakes are operating properly.

EAS30633
CHECKING THE FRONT BRAKE PADS

The following procedure applies to all of the brake pads.

1. Operate the brake.
2. Check:
   - Front brake pad
     Wear indicator grooves "a" almost disappeared → Replace the brake pads as a set.
     Refer to "FRONT BRAKE" on page 4-35.

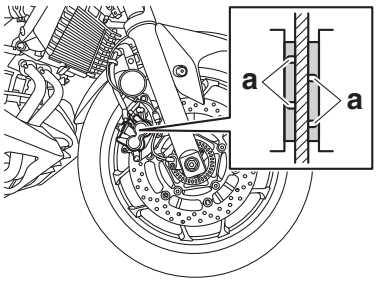

EAS30634
CHECKING THE REAR BRAKE PADS

The following procedure applies to all of the brake pads.

1. Operate the brake.
2. Check:
   - Rear brake pad
     Wear indicator grooves "a" almost disappeared → Replace the brake pads as a set.
     Refer to "REAR BRAKE" on page 4-47.

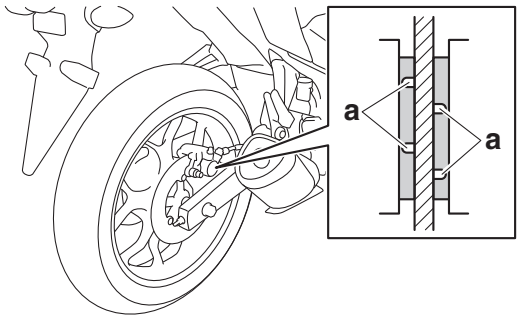

EAS30635
CHECKING THE FRONT BRAKE HOSES

1. Check:
   - Brake hose
     Cracks/damage → Replace.
2. Check:
   - Brake hose holder
     Loose → Tighten the holder bolt.
3. Hold the vehicle upright and apply the brake several times.
4. Check:
   - Brake hose
     Brake fluid leakage → Replace the damaged hose.
     Refer to "FRONT BRAKE" on page 4-35.

EAS30636
CHECKING THE REAR BRAKE HOSE

1. Check:
   - Brake hose "1"
     Cracks/damage → Replace.

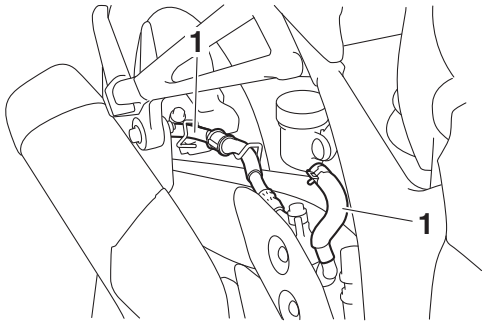

2. Check:
   - Brake hose guide
     Loose → Tighten the bolt.

3. Hold the vehicle upright and apply the rear brake several times.
4. Check:
   • Brake hose
   Brake fluid leakage → Replace the damaged hose.
   Refer to “REAR BRAKE” on page 4-47.

EAS30637

BLEEDING THE HYDRAULIC BRAKE SYSTEM (ABS)

EWA14000

⚠ WARNING

Always bleed the brake system when the brake related parts are removed.

ECA18050

NOTICE

- **Bleed the brake system in the following order.**
- **1st step: Front brake calipers**
- **2nd step: Rear brake caliper**

EWA16530

⚠ WARNING

Bleed the ABS whenever:
- **the system is disassembled.**
- **a brake hose is loosened, disconnected or replaced.**
- **the brake fluid level is very low.**
- **brake operation is faulty.**

TIP

- Be careful not to spill any brake fluid or allow the brake master cylinder reservoir or brake fluid reservoir to overflow.
- When bleeding the hydraulic brake system, make sure there is always enough brake fluid before applying the brake. Ignoring this precaution could allow air to enter the hydraulic brake system, considerably lengthening the bleeding procedure.
- If bleeding is difficult, it may be necessary to let the brake fluid settle for a few hours. Repeat the bleeding procedure when the tiny bubbles in the hose have disappeared.

1. Bleed:
   • ABS

▼▼▼▼▼▼▼▼▼▼▼▼▼▼▼▼▼▼▼▼▼▼▼▼▼▼▼▼▼▼▼▼▼▼▼

a. Fill the brake fluid reservoir to the proper level with the specified brake fluid.
b. Install the diaphragm (brake master cylinder reservoir or brake fluid reservoir).
c. Connect a clear plastic hose “1” tightly to the bleed screw “2”.

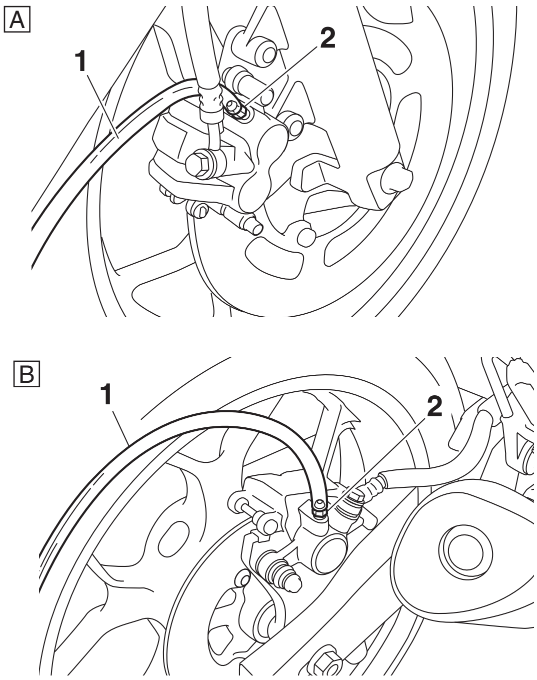

A. Front
B. Rear

d. Place the other end of the hose into a container.
e. Slowly apply the brake several times.
f. Fully pull the brake lever or fully press down the brake pedal and hold it in position.
g. Loosen the bleed screw.

TIP

Loosening the bleed screw will release the pressure and cause the brake lever to contact the throttle grip or the brake pedal to fully extend.

h. Tighten the bleed screw, and then release the brake lever or brake pedal.
i. Repeat steps (e) to (h) until all of the air bubbles have disappeared from the brake fluid in the plastic hose.
j. Check the operation of the hydraulic unit. Refer to “HYDRAULIC UNIT OPERATION TESTS” on page 4-65.

ECA18060

NOTICE

Make sure that the main switch is turned to “OFF” before checking the operation of the hydraulic unit.

k. After operating the ABS, repeat steps (e) to (i), and then fill the brake master cylinder reservoir or brake fluid reservoir to the proper level with the specified brake fluid.

l. Tighten the bleed screw to specification.

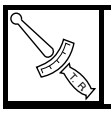	**Brake caliper bleed screw** **6 Nm (0.6 m·kgf, 4.3 ft·lbf)**

m. Fill the brake master cylinder or brake fluid reservoir to the proper level with the specified brake fluid.
Refer to “CHECKING THE BRAKE FLUID LEVEL” on page 3-15.

▲▲▲▲▲▲▲▲▲▲▲▲▲▲▲▲▲▲▲▲▲▲▲▲▲▲▲▲▲▲▲▲▲▲

EAS30632
CHECKING THE BRAKE FLUID LEVEL

1. Stand the vehicle on a level surface.

TIP
- Place the vehicle on a suitable stand.
- Make sure the vehicle is upright.

2. Check:
   - Brake fluid level
     Below the minimum level mark “a” → Add the specified brake fluid to the proper level.

	Specified brake fluid **DOT 4**

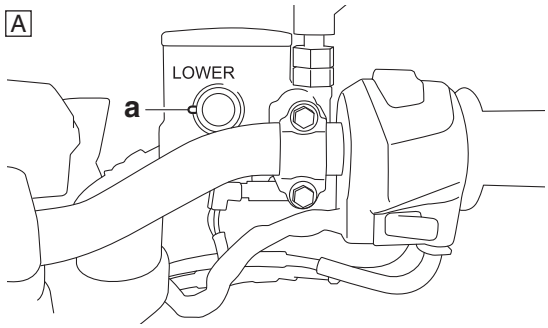

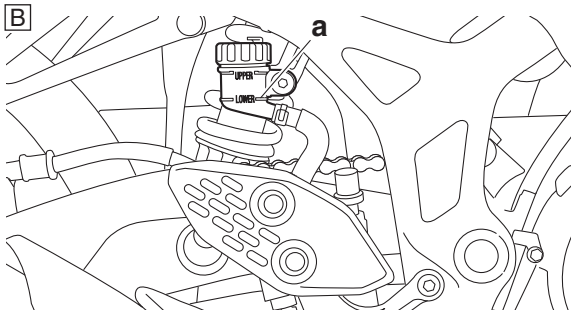

A. Front brake
B. Rear brake

EWA13090
WARNING
- **Use only the designated brake fluid. Other brake fluids may cause the rubber seals to deteriorate, causing leakage and poor brake performance.**
- **Refill with the same type of brake fluid that is already in the system. Mixing brake fluids may result in a harmful chemical reaction, leading to poor brake performance.**
- **When refilling, be careful that water does not enter the brake fluid reservoir. Water will significantly lower the boiling point of the brake fluid and could cause vapor lock.**

ECA13540
NOTICE
Brake fluid may damage painted surfaces and plastic parts. Therefore, always clean up any spilt brake fluid immediately.

TIP
In order to ensure a correct reading of the brake fluid level, make sure the top of the brake fluid reservoir is horizontal.

EAS30638
CHECKING THE WHEELS

The following procedure applies to both of the wheels.

1. Check:
   - Wheel
     Damage/out-of-round → Replace.

EWA13260
WARNING
Never attempt to make any repairs to the wheel.

TIP
After a tire or wheel has been changed or replaced, always balance the wheel.

2. Measure:
   - Radial wheel runout
   - Lateral wheel runout
     Refer to “CHECKING THE FRONT WHEEL” on page 4-20 and “CHECKING THE REAR WHEEL” on page 4-30.

EAS30640
CHECKING THE TIRES

The following procedure applies to both of the tires.

1. Check:
   - Tire pressure
     Out of specification → Regulate.

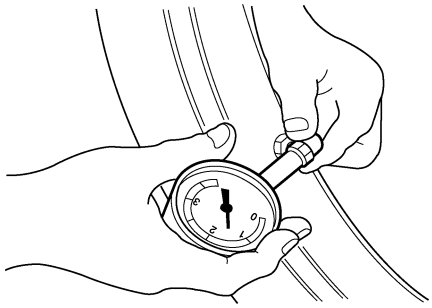

EWA13181

WARNING

- **The tire pressure should only be checked and regulated when the tire temperature equals the ambient air temperature.**
- **The tire pressure and the suspension must be adjusted according to the total weight (including cargo, rider, passenger and accessories) and the anticipated riding speed.**
- **Operation of an overloaded vehicle could cause tire damage, an accident or an injury.**

NEVER OVERLOAD THE VEHICLE.

Tire air pressure (measured on cold tires)
Front (1 person)
200 kPa (2.00 kgf/cm², 29 psi)
Rear (1 person)
250 kPa (2.5 kgf/cm², 36 psi)
Front (2 persons)
200 kPa (2.00 kgf/cm², 29 psi)
Rear (2 persons)
250 kPa (2.5 kgf/cm², 36 psi)
Maximum load
160 kg (353 lb)
*** Total weight of rider, passenger, cargo and accessories**

2. Check:
   - Tire surfaces
     Damage/wear → Replace the tire.

EWA13190

WARNING

It is dangerous to ride with a worn-out tire. When the tire tread reaches the wear limit, replace the tire immediately.

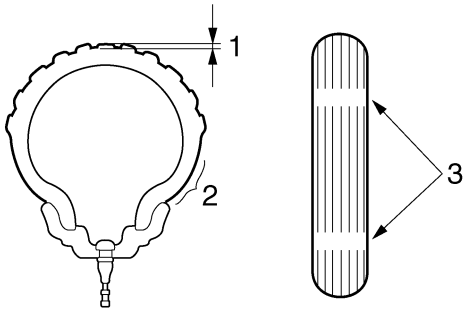

1. Tire tread depth
2. Side wall
3. Wear indicator

Wear limit (front)
1.6 mm (0.06 in) (EUR,RUS)
1.5 mm (0.06 in) (AUS,NZL)
Wear limit (rear)
1.6 mm (0.06 in) (EUR,RUS)
1.5 mm (0.06 in) (AUS,NZL)

EWA14090

WARNING

After extensive tests, the tires listed below have been approved by Yamaha Motor Co., Ltd. for this model. The front and rear tires should always be by the same manufacturer and of the same design. No guarantee concerning handling characteristics can be given if a tire combination other than one approved by Yamaha is used on this vehicle.

Front tire
Size
110/70-17M/C (54H)
Manufacturer/model
MICHELIN/PILOT STREET

Rear tire
Size
140/70-17M/C (66H)
Manufacturer/model
MICHELIN/PILOT STREET

EWA13210

WARNING

New tires have a relatively low grip on the road surface until they have been slightly worn. Therefore, approximately 100 km should be traveled at normal speed before any high-speed riding is done.

TIP

For tires with a direction of rotation mark “1”:

- Install the tire with the mark pointing in the direction of wheel rotation.
- Align the mark “2” with the valve installation point.

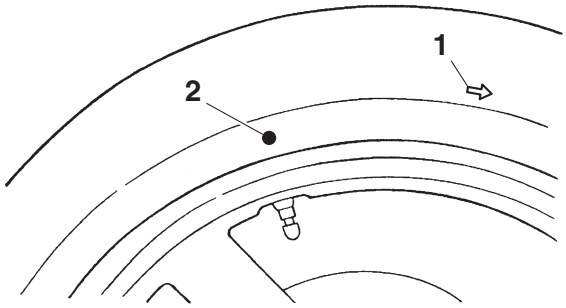

EAS30641
CHECKING THE WHEEL BEARINGS

The following procedure applies to all of the wheel bearings.

1. Check:
   - Wheel bearings
     Refer to “CHECKING THE FRONT WHEEL” on page 4-20 and “CHECKING THE REAR WHEEL” on page 4-30.

EAS30802
CHECKING THE SWINGARM OPERATION

1. Check:
   - Swingarm operation
     Swingarm not working properly → Check the swingarm.
     Refer to “SWINGARM AND REAR SHOCK ABSORBER ASSEMBLY” on page 4-87.
2. Check:
   - Swingarm excessive play
     Refer to “SWINGARM AND REAR SHOCK ABSORBER ASSEMBLY” on page 4-87.

EAS30643
LUBRICATING THE SWINGARM PIVOT

1. Lubricate:
   - Bearings
   - Spacer
   - Dust covers

	Recommended lubricant **Lithium-soap-based grease**

Refer to “INSTALLING THE SWINGARM” on page 4-90.

EAS30644
ADJUSTING THE DRIVE CHAIN SLACK

ECA13550
NOTICE

A drive chain that is too tight will overload the engine and other vital parts, and one that is too loose can skip and damage the swingarm or cause an accident. Therefore, keep the drive chain slack within the specified limits.

1. Stand the vehicle on a level surface.

EWA13120
WARNING

Securely support the vehicle so that there is no danger of it falling over.

TIP

Place the vehicle on a suitable stand so that the rear wheel is elevated.

2. Move the rear wheel several times and find the tightest position of the drive chain.
3. Check:
   - Drive chain slack
     Out of specification → Adjust.

TIP

Measure the drive chain slack “a” as shown in the illustration.

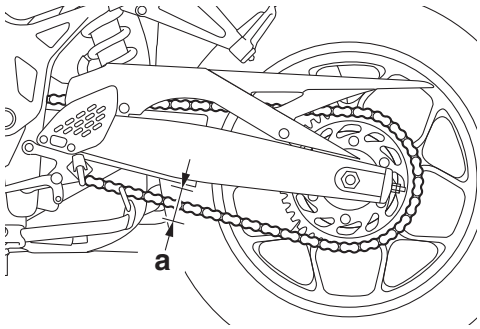

	Drive chain slack **35.0–45.0 mm (1.38–1.77 in)** **Drive chain slack (fully extension of rear suspension)** **40.0–50.0 mm (1.57–1.97 in)**

4. Remove the drive chain puller cap “1”, and then loosen the axle nut “2”.

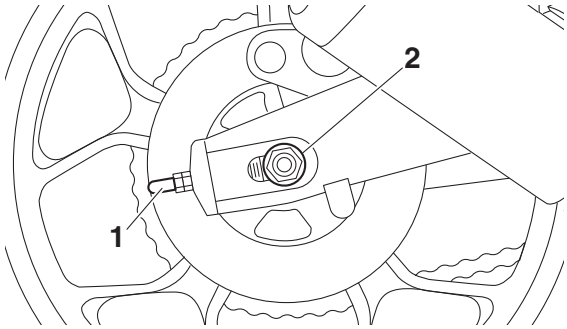

5. Adjust:
   - Drive chain slack

▼▼▼▼▼▼▼▼▼▼▼▼▼▼▼▼▼▼▼▼▼▼▼▼▼▼▼▼▼▼▼▼▼▼

a. Loosen both of the drive chain puller locknuts “1”.
b. Turn both of the drive chain puller adjusting nuts “2” in direction “a” or “b” until the specified drive chain slack is obtained.

Direction “a”
Drive chain is tightened.
Direction “b”
Drive chain is loosened.

TIP

- Using the alignment marks “c” on each side of the swingarm, make sure that both drive chain pullers “3” are in the same position for proper wheel alignment.
- There should be no clearance between the swingarm end plate and the adjusting nuts.

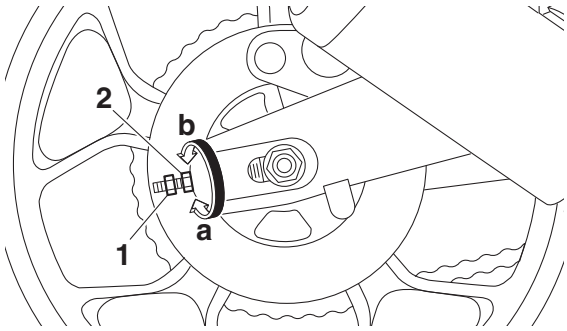

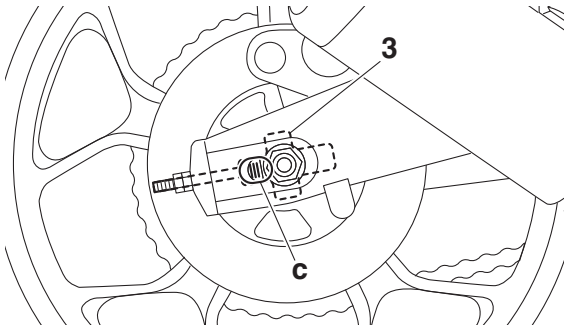

c. Tighten the wheel axle nut to specification.

Rear wheel axle nut
57 Nm (5.7 m·kgf, 41 ft·lbf)

TIP

Apply lithium-soap-based grease to the contact surface and threads of the rear wheel axle nut.

d. Tighten the drive chain puller adjusting nuts and the drive chain puller locknuts to specification.

Drive chain puller adjusting nut
1.5 Nm (0.15 m·kgf, 1.1 ft·lbf)
Drive chain puller locknut
16 Nm (1.6 m·kgf, 12 ft·lbf)

▲▲▲▲▲▲▲▲▲▲▲▲▲▲▲▲▲▲▲▲▲▲▲▲▲▲▲▲▲▲▲▲▲▲

EAS30803

LUBRICATING THE DRIVE CHAIN

The drive chain consists of many interacting parts. If the drive chain is not maintained properly, it will wear out quickly. Therefore, the drive chain should be serviced, especially when the vehicle is used in dusty areas.
This vehicle has a drive chain with small rubber O-rings between each side plate. Steam cleaning, high-pressure washing, certain solvents, and the use of a coarse brush can damage these O-rings. Therefore, use only kerosene to clean the drive chain. Wipe the drive chain dry and thoroughly lubricate it with chain lubricant that is suitable for O-ring chains. Do not use any other lubricants on the drive chain since they may contain solvents that could damage the O-rings.

Recommended lubricant
Chain lubricant suitable for O-ring chains

EAS30645

CHECKING AND ADJUSTING THE STEERING HEAD

1. Stand the vehicle on a level surface.

EWA13120

WARNING

Securely support the vehicle so that there is no danger of it falling over.

TIP

Place the vehicle on a suitable stand so that the front wheel is elevated.

2. Check:
   - Steering head
   Grasp the bottom of the front fork legs and gently rock the front fork.
   Blinding/looseness → Adjust the steering head.
3. Remove:
   - Upper bracket
   Refer to “STEERING HEAD” on page 4-83.
4. Adjust:
   - Steering head

▼▼▼▼▼▼▼▼▼▼▼▼▼▼▼▼▼▼▼▼▼▼▼▼▼▼▼▼▼▼▼▼▼▼▼

a. Remove the lock washer “1”, the upper ring nut “2”, and the washer “3”.

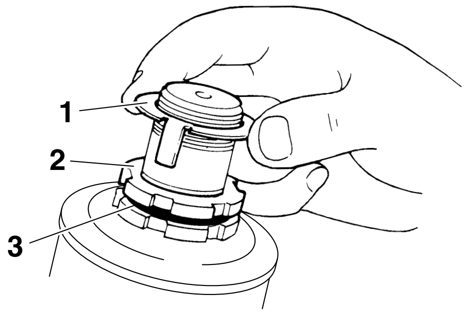

b. Loosen the lower ring nut “4” and then tighten it to specification with a steering nut wrench “5”.

Steering nut wrench
90890-01403
Exhaust flange nut wrench
YU-A9472

Lower ring nut (initial tightening torque)
48 Nm (4.8 m·kgf, 35 ft·lbf)

TIP

Set the torque wrench at a right angle to the steering nut wrench.

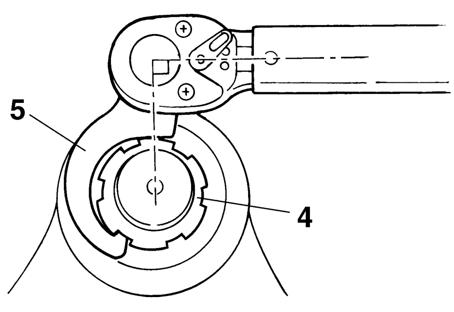

c. Loosen the lower ring nut completely and then tighten it to specification with a steering nut wrench.

EWA13140

⚠ WARNING

Do not overtighten the lower ring nut.

Lower ring nut (final tightening torque)
18 Nm (1.8 m·kgf, 13 ft·lbf)

d. Check the steering head for looseness or binding by turning the front fork all the way in both directions. If any binding is felt, remove the lower bracket and check the upper and lower bearings.
   Refer to “STEERING HEAD” on page 4-83.
e. Install the washer “3”.
f. Install the upper ring nut “2”.
g. Finger tighten the upper ring nut, then align the slots of both ring nuts. If necessary, hold the lower ring nut and tighten the upper ring nut until their slots are aligned.
h. Install the lock washer “1”.

TIP

Make sure the lock washer tabs “a” sit correctly in the ring nut slots “b”.

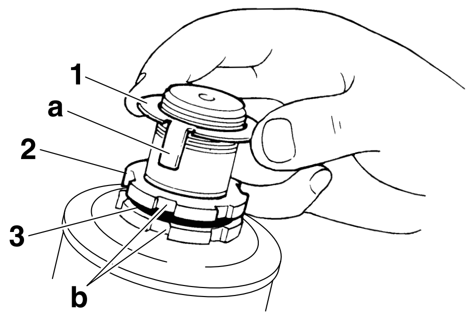

▲▲▲▲▲▲▲▲▲▲▲▲▲▲▲▲▲▲▲▲▲▲▲▲▲▲▲▲▲▲▲▲▲▲▲

5. Install:
   - Upper bracket
   Refer to “STEERING HEAD” on page 4-83.

EAS30646

LUBRICATING THE STEERING HEAD

1. Lubricate:
   - Upper bearing
   - Lower bearing
   - Bearing cover
   - Lower bearing dust seal

Recommended lubricant
Lithium-soap-based grease

EAS31186

CHECKING THE CHASSIS FASTENERS

Make sure that all nuts, bolts, and screws are properly tightened.

Refer to “CHASSIS TIGHTENING TORQUES” on page 2-18.

EAS30804
LUBRICATING THE BRAKE LEVER
Lubricate the pivoting point and metal-to-metal moving parts of the lever.

	Recommended lubricant **Silicone grease**

EAS30649
LUBRICATING THE PEDAL
Lubricate the pivoting point and metal-to-metal moving parts of the pedal.

	Recommended lubricant **Lithium-soap-based grease**

EAS30805
LUBRICATING THE CLUTCH LEVER
Lubricate the pivoting point and metal-to-metal moving parts of the lever.

	Recommended lubricant **Lithium-soap-based grease**

EAS30650
CHECKING THE SIDESTAND
1. Check:
   - Sidestand operation
     Check that the sidestand moves smoothly.
     Rough movement → Repair or replace.

EAS30651
LUBRICATING THE SIDESTAND
Lubricate the pivoting point, metal-to-metal moving parts and spring contact point of the sidestand.

	Recommended lubricant **Lithium-soap-based grease**

EAS30652
CHECKING THE SIDESTAND SWITCH
Refer to “ELECTRICAL COMPONENTS” on page 8-109.

EAS30653
CHECKING THE FRONT FORK
1. Stand the vehicle on a level surface.

EWA13120
WARNING

Securely support the vehicle so that there is no danger of it falling over.

2. Check:
   - Inner tube
     Damage/scratches → Replace.
   - Front fork leg
     Oil leaks between inner tube and outer tube → Replace the oil seal.
3. Hold the vehicle upright and apply the front brake.
4. Check:
   - Front fork operation
     Push down hard on the handlebar several times and check if the front fork rebounds smoothly.
     Rough movement → Repair.
     Refer to “FRONT FORK” on page 4-74.

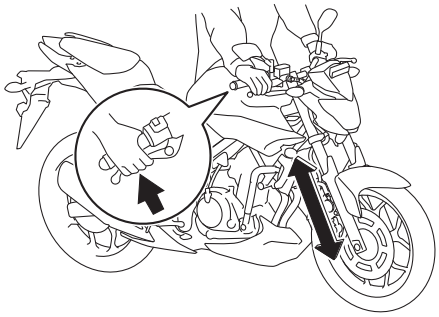

EAS30808
CHECKING THE REAR SHOCK ABSORBER ASSEMBLY
Refer to “CHECKING THE REAR SHOCK ABSORBER ASSEMBLY” on page 4-89.

EAS30655
ADJUSTING THE REAR SHOCK ABSORBER ASSEMBLY
EWA13120
WARNING

Securely support the vehicle so that there is no danger of it falling over.

Spring preload
ECA13590
NOTICE

Never go beyond the maximum or minimum adjustment positions.

1. Remove:
   - Drive chain guard
     Remove the drive chain guard “1” by removing the bolts and collers “2”.

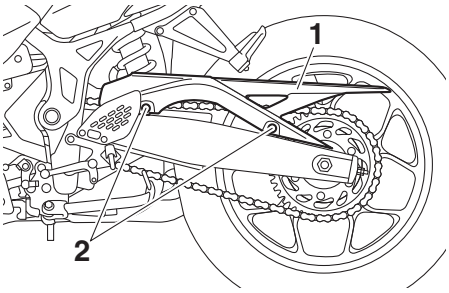

2. Adjust:
   - Spring preload

▼▼▼▼▼▼▼▼▼▼▼▼▼▼▼▼▼▼▼▼▼▼▼▼▼▼▼▼▼▼▼▼▼▼▼▼▼▼

a. Adjust the spring preload with the special wrench “1” and extension bar “2” included in the owner’s tool kit.
b. Turn the adjusting ring “3” in direction “a” or “b”.
c. Align the desired position on the adjusting ring with the stopper “4”.

Direction “a”
Spring preload is increased (suspension is harder).
Direction “b”
Spring preload is decreased (suspension is softer).

Spring preload
Minimum
1
Standard
3
Maximum
7

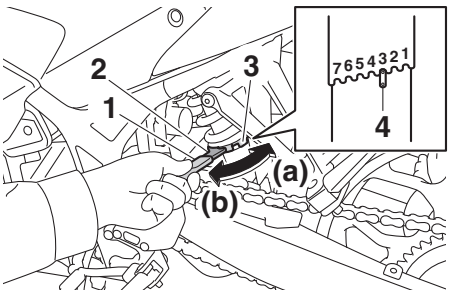

▲▲▲▲▲▲▲▲▲▲▲▲▲▲▲▲▲▲▲▲▲▲▲▲▲▲▲▲▲▲▲▲▲▲▲▲▲▲

EAS30656

CHECKING THE ENGINE OIL LEVEL

1. Stand the vehicle on a level surface.

TIP

- Place the vehicle on a suitable stand.
- Make sure the vehicle is upright.

2. Start the engine, warm it up for several minutes, and then turn it off.
3. Check:
   - Engine oil level
     The engine oil level should be between the minimum level mark “a” and maximum level mark “b”.
     Below the minimum level mark → Add the recommended engine oil to the proper level.

TIP

Before checking the engine oil level, wait a few minutes until the oil has settled.

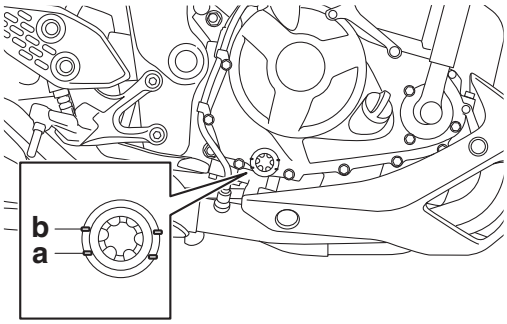

Recommended brand
YAMALUBE
Type
SAE 10W–40
Recommended engine oil grade
API service SG type or higher, JASO standard MA

ECA13361

NOTICE

- **Engine oil also lubricates the clutch and the wrong oil types or additives could cause clutch slippage. Therefore, do not add any chemical additives or use engine oils with a grade of “CD” or higher and do not use oils labeled “ENERGY CONSERVING II”.**
- **Do not allow foreign materials to enter the crankcase.**

4. Start the engine, warm it up for several minutes, and then turn it off.
5. Check the engine oil level again.

TIP

Before checking the engine oil level, wait a few minutes until the oil has settled.

EAS30657

CHANGING THE ENGINE OIL

1. Start the engine, warm it up for several minutes, and then turn it off.
2. Place a container under the engine oil drain bolt.
3. Remove:
   - Bottom cowling
     Refer to “GENERAL CHASSIS (3)” on page 4-8.
4. Remove:
   - Engine oil filler cap “1”
   - Engine oil drain bolt “2”
     (along with the gasket “3”)

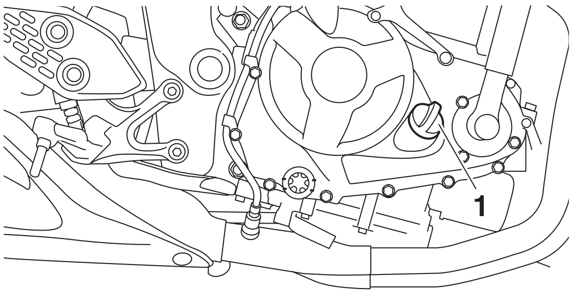

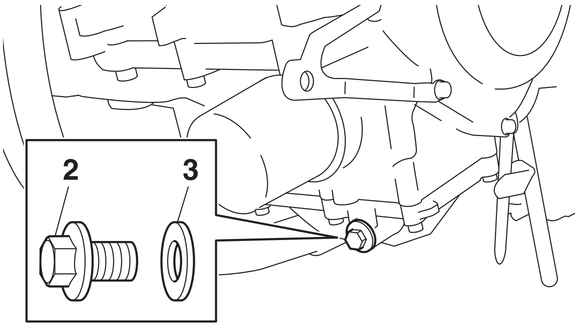

5. Drain:
   - Engine oil
     (completely from the oil pan)
6. If the oil filter cartridge is also to be replaced, perform the following procedure.

▼▼▼▼▼▼▼▼▼▼▼▼▼▼▼▼▼▼▼▼▼▼▼▼▼▼▼▼▼▼▼▼▼▼▼

a. Remove the oil filter cartridge “1” with an oil filter wrench “2”.

Oil filter wrench
90890-01426
Oil filter wrench
YU-38411

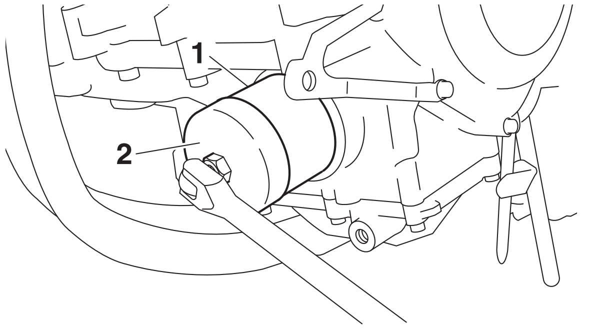

b. Lubricate the O-ring “3” of the new oil filter cartridge with a thin coat of engine oil.

ECA13390

NOTICE

Make sure the O-ring “3” is positioned correctly in the groove of the oil filter cartridge.

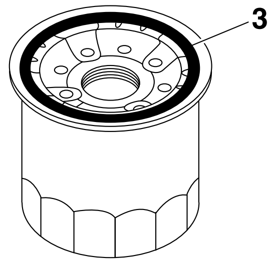

c. Tighten the new oil filter cartridge to specification with an oil filter wrench.

Oil filter cartridge
17 Nm (1.7 m·kgf, 12 ft·lbf)

▲▲▲▲▲▲▲▲▲▲▲▲▲▲▲▲▲▲▲▲▲▲▲▲▲▲▲▲▲▲▲▲▲▲▲

7. Install:
   - Engine oil drain bolt “1”
     (along with the gasket “2” New)

Engine oil drain bolt
20 Nm (2.0 m·kgf, 14 ft·lbf)

TIP

Install the new gasket as shown in the illustration.

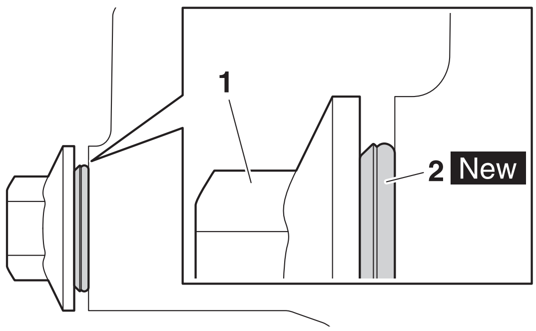

8. Fill:
   - Oil pan
     (with the specified amount of the recommended engine oil)

Engine oil quantity
Quantity (disassembled)
2.40 L (2.54 US qt, 2.11 Imp.qt)
Without oil filter cartridge replacement
1.80 L (1.90 US qt, 1.58 Imp.qt)
With oil filter cartridge replacement
2.10 L (2.22 US qt, 1.85 Imp.qt)

9. Install:
   - Engine oil filler cap
     (along with the O-ring New)

TIP

Lubricate the O-ring with lithium-soap-based grease.

10. Start the engine, warm it up for several minutes, and then turn it off.
11. Check:
    - Engine
      (for engine oil leaks)
12. Check:
    - Engine oil level
      Refer to "CHECKING THE ENGINE OIL LEVEL" on page 3-21.
13. Check:
    - Engine oil pressure

▼▼▼▼▼▼▼▼▼▼▼▼▼▼▼▼▼▼▼▼▼▼▼▼▼▼▼▼▼▼▼▼▼▼

a. Slightly loosen the engine oil check bolt "1".

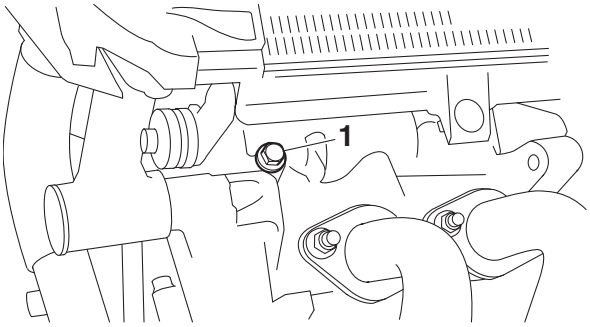

b. Start the engine and keep it idling until engine oil starts to seep from the oil check bolts. If no engine oil comes out after one minute, turn the engine off so that it will not seize.
c. Check the engine oil passages, the oil filter cartridge and the oil pump for damage or leakage. Refer to "OIL PUMP" on page 5-63.
d. Start the engine after solving the problem(s) and check the engine oil pressure again.
e. Tighten the oil check bolts to specification.

Engine oil check bolt
15 Nm (1.5 m·kgf, 11 ft·lbf)

▲▲▲▲▲▲▲▲▲▲▲▲▲▲▲▲▲▲▲▲▲▲▲▲▲▲▲▲▲▲▲▲▲▲

14. Install:
    - Bottom cowling
      Refer to "GENERAL CHASSIS (3)" on page 4-8.

EAS30811

CHECKING THE COOLANT LEVEL

1. Stand the vehicle on a level surface.

TIP

- Place the vehicle on a suitable stand.
- Make sure the vehicle is upright.

2. Check:
   - Coolant level
     The coolant level should be between the minimum level mark "a" and maximum level mark "b".
     Below the minimum level mark → Add the recommended coolant to the proper level.

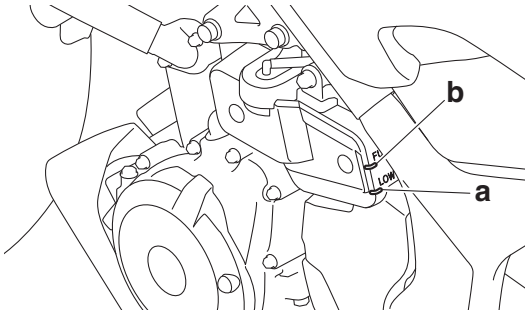

ECA13470

NOTICE

- **Adding water instead of coolant lowers the antifreeze content of the coolant. If water is used instead of coolant check, and if necessary, correct the antifreeze concentration of the coolant.**
- **Use only distilled water. However, if distilled water is not available, soft water may be used.**

3. Start the engine, warm it up for several minutes, and then turn it off.
4. Check:
   - Coolant level

TIP

Before checking the coolant level, wait a few minutes until it settles.

EAS30812
CHECKING THE COOLING SYSTEM
1. Check:
   - Radiator “1”
   - Radiator inlet hose “2”
   - Radiator outlet hose “3”
   - Thermostat cover “4”
   - Thermostat “5”
     Cracks/damage → Replace.
     Refer to “RADIATOR” on page 6-1, “THERMOSTAT” on page 6-5 and “WATER PUMP” on page 6-7.

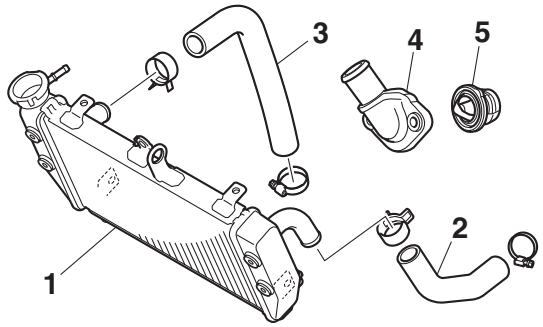

EAS30813
CHANGING THE COOLANT
1. Remove:
   - Bottom cowling
     Refer to “GENERAL CHASSIS (3)” on page 4-8.
2. Remove:
   - Radiator cap screw “1”
   - Radiator cap “2”

EWA13030
WARNING

A hot radiator is under pressure. Therefore, do not remove the radiator cap when the engine is hot. Scalding hot fluid and steam may be blown out, which could cause serious injury. When the engine has cooled, open the radiator cap as follows:
Place a thick rag or a towel over the radiator cap and slowly turn the radiator cap counterclockwise toward the detent to allow any residual pressure to escape. When the hissing sound has stopped, press down on the radiator cap and turn it counterclockwise to remove.

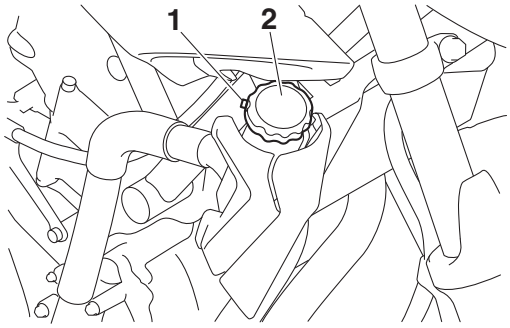

3. Remove:
   - Coolant reservoir cover “1”
   - Coolant reservoir cap “2”
   - Coolant reservoir
     Refer to “RADIATOR” on page 6-1.

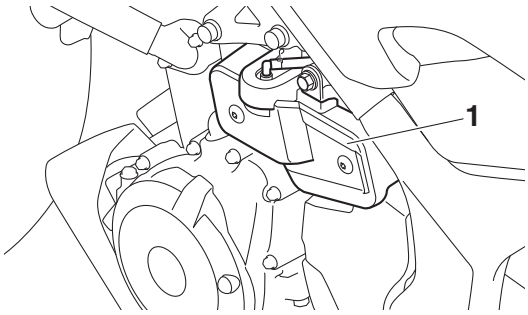

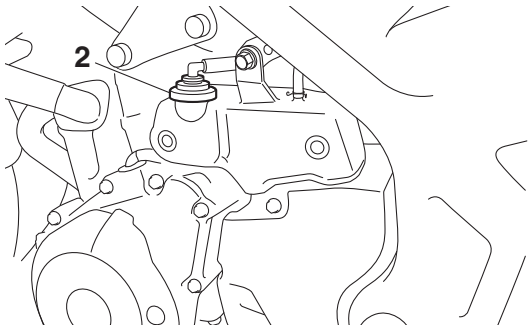

4. Drain:
   - Coolant
     (from the coolant reservoir)
5. Remove:
   - Coolant drain bolt “1”
     (along with the copper washer)

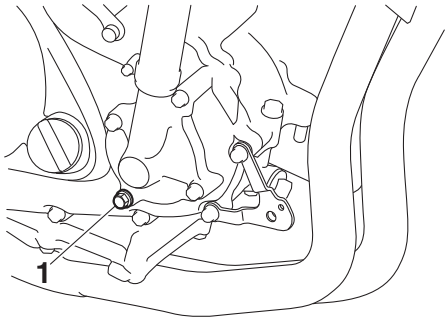

6. Drain:
   - Coolant
     (from the engine and radiator)
7. Install:
   - Coolant drain bolt
     (along with the copper washer New)

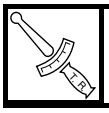	**Coolant drain bolt** **10 Nm (1.0 m·kgf, 7.2 ft·lbf)**

8. Install:
   - Coolant reservoir
     Refer to “RADIATOR” on page 6-1.
9. Fill:
   - Cooling system
     (with the specified amount of the recommended coolant)

	Recommended antifreeze **High-quality ethylene glycol antifreeze containing corrosion inhibitors for aluminium engines** **Mixing ratio** **1:1 (antifreeze: water)** **Radiator (including all routes)** **0.96 L (1.01 US qt, 0.84 Imp.qt)** **Coolant reservoir (up to the maximum level mark)** **0.25 L (0.26 US qt, 0.22 Imp.qt)**

Handling notes for coolant
Coolant is potentially harmful and should be handled with special care.

EWA13040

WARNING

- **If coolant splashes in your eyes, thoroughly wash them with water and consult a doctor.**
- **If coolant splashes on your clothes, quickly wash it away with water and then with soap and water.**
- **If coolant is swallowed, induce vomiting and get immediate medical attention.**

ECA13481

NOTICE

- **Adding water instead of coolant lowers the antifreeze content of the coolant. If water is used instead of coolant, check, and if necessary, correct the antifreeze concentration of the coolant.**
- **Use only distilled water. However, if distilled water is not available, soft water may be used.**
- **If coolant comes into contact with painted surfaces, immediately wash them with water.**
- **Do not mix different types of antifreeze.**

10. Install:
    - Radiator cap “1”
    - Radiator cap screw “2”

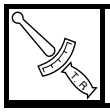	**Radiator cap screw** **1.5 Nm (0.15 m·kgf, 1.1 ft·lbf)**

TIP

Face the screw head of the radiator cap screw outward.

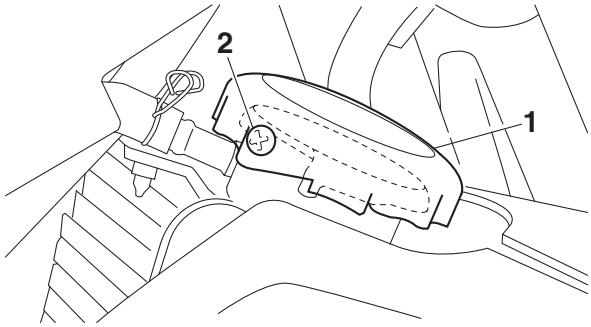

11. Fill:
    - Coolant reservoir
      (with the recommended coolant to the maximum level mark “a”)

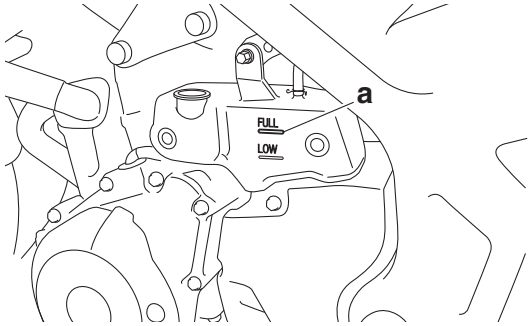

12. Install:
    - Coolant reservoir cap
    - Coolant reservoir cover
      Refer to “RADIATOR” on page 6-1.
13. Install:
    - Bottom cowling
      Refer to “GENERAL CHASSIS (3)” on page 4-8.
14. Start the engine, warm it up for several minutes, and then turn it off.
15. Check:
    - Coolant level
      Refer to “CHECKING THE COOLANT LEVEL” on page 3-23.

TIP

Before checking the coolant level, wait a few minutes until the coolant has settled.

EAS30658

CHECKING THE BRAKE LIGHT SWITCHES

1. Check:
   - Front brake light switch operation
   - Rear brake light switch operation
     When operating the brake lever and brake pedal, confirm that the brake light turns on.
     Faulty → Refer to "CHECKING THE SWITCHES" on page 8-113.

EAS30659

ADJUSTING THE REAR BRAKE LIGHT SWITCH

TIP

The rear brake light switch is operated by movement of the brake pedal. The rear brake light switch is properly adjusted when the brake light comes on just before the braking effect starts.

1. Check:
   - Rear brake light operation timing
     Incorrect → Adjust.
2. Adjust:
   - Rear brake light operation timing

▼▼▼▼▼▼▼▼▼▼▼▼▼▼▼▼▼▼▼▼▼▼▼▼▼▼▼▼▼▼▼▼▼▼

a. Hold the main body "1" of the rear brake light switch so that it does not rotate and turn the adjusting nut "2" in direction "a" or "b" until the rear brake light comes on at the proper time.

Direction "a"
Brake light comes on sooner.
Direction "b"
Brake light comes on later.

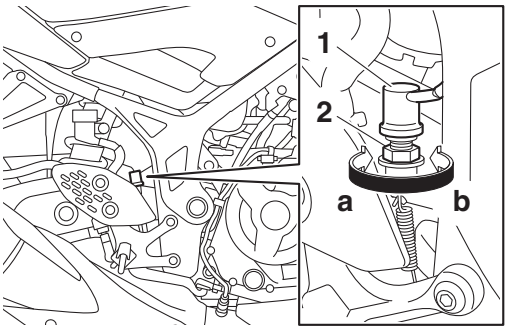

▲▲▲▲▲▲▲▲▲▲▲▲▲▲▲▲▲▲▲▲▲▲▲▲▲▲▲▲▲▲▲▲▲▲

EAS30660

CHECKING AND LUBRICATING THE CABLES

The following procedure applies to all of the inner and outer cables.

EWA13270

WARNING

Damaged outer cable may cause the cable to corrode and interfere with its movement. Replace damaged outer cable and inner cables as soon as possible.

1. Check:
   - Outer cable
     Damage → Replace.
2. Check:
   - Cable operation
     Rough movement → Lubricate.

Recommended lubricant
Engine oil or a suitable cable lubricant

TIP

Hold the cable end upright and pour a few drops of lubricant into the cable sheath or use a suitable lubricating device.

EAS30861

CHECKING THE THROTTLE GRIP OPERATION

1. Check:
   - Throttle cables
     Damage/deterioration → Replace.
   - Throttle cable installation
     Incorrect → Reinstall the throttle cables.
     Refer to "HANDLEBAR" on page 4-69.
2. Check:
   - Throttle grip movement
     Rough movement → Lubricate or replace the defective part(s).

Recommended lubricant
Suitable cable lubricant

TIP

With the engine stopped, turn the throttle grip slowly and release it. Make sure that the throttle grip turns smoothly and returns properly when released.
Repeat this check with the handlebar turned all the way to the left and right.

3. Check:
   - Throttle grip free play “a”
     Out of specification → Adjust.

	Throttle grip free play **3.0–5.0 mm (0.12–0.20 in)**

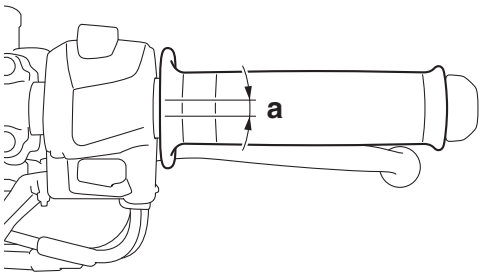

4. Adjust:
   - Throttle grip free play

TIP

Prior to adjusting the throttle grip free play, throttle body synchronization should be adjusted properly.

▼▼▼▼▼▼▼▼▼▼▼▼▼▼▼▼▼▼▼▼▼▼▼▼▼▼▼▼▼▼▼▼▼▼

a. Slide the rubber cover “1”.
b. Loosen the locknut “2”.
c. Turn the adjusting nut “3” in direction “a” or “b” until the specified throttle grip free play is obtained.

Direction “a” **Throttle grip free play is increased.** **Direction “b”** **Throttle grip free play is decreased.**

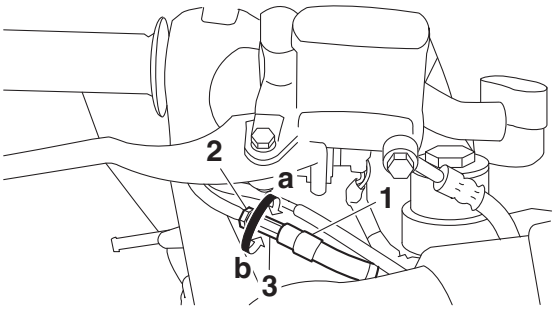

d. Tighten the locknut.

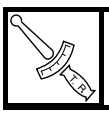	**Throttle cable locknut** **4.3 Nm (0.43 m·kgf, 3.1 ft·lbf)**

e. Slide the rubber cover to its original position.

TIP

Make sure that the adjusting nut is covered completely by the rubber cover.

▲▲▲▲▲▲▲▲▲▲▲▲▲▲▲▲▲▲▲▲▲▲▲▲▲▲▲▲▲▲▲▲▲▲

EAS30663

CHECKING THE SWITCHES, LIGHTS AND SIGNALS

1. Check that all switches operate and that all lights come on.
   Refer to “INSTRUMENT AND CONTROL FUNCTIONS” in Owner’s manual.
   Faulty → Refer to “CHECKING THE SWITCHES” on page 8-113 and “CHECKING THE BULBS AND BULB SOCKETS” on page 8-116.

EAS30665

REPLACING THE HEADLIGHT BULBS

1. Remove:
   - Meter assembly
     Refer to “GENERAL CHASSIS (4)” on page 4-12.
2. Remove:
   - Headlight assembly bolts “1”

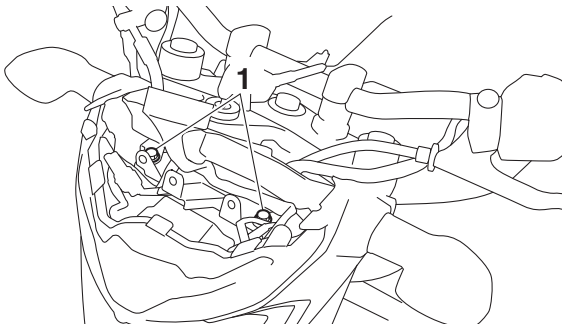

3. Remove:
   - Headlight assembly “1”

TIP

Pull the top of the headlight assembly “1” in the direction of the arrow, and then remove the headlight assembly from the headlight lower bracket “2”.

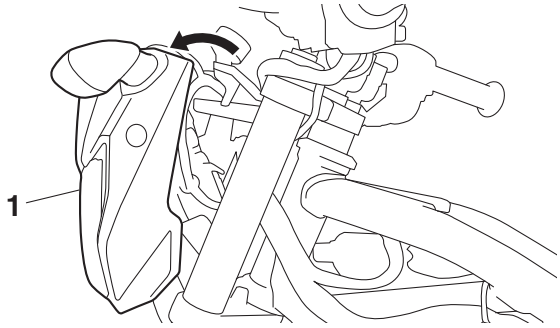

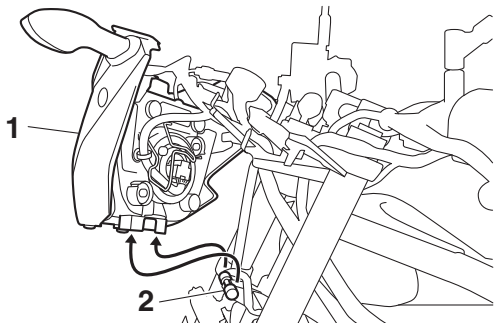

4. Disconnect:
   - Headlight coupler “1”

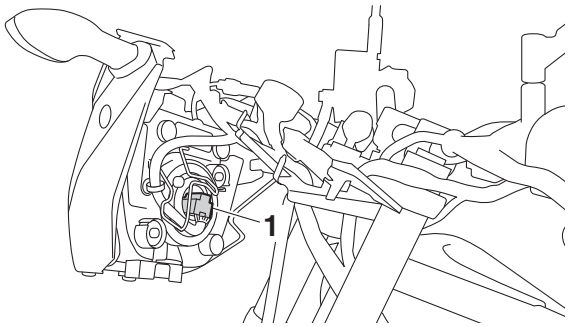

5. Remove:
   - Headlight bulb cover “1”

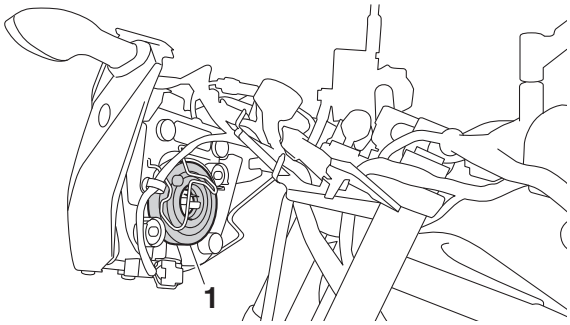

6. Unhook:
   - Headlight bulb holder “1”
7. Remove:
   - Headlight bulb “2”

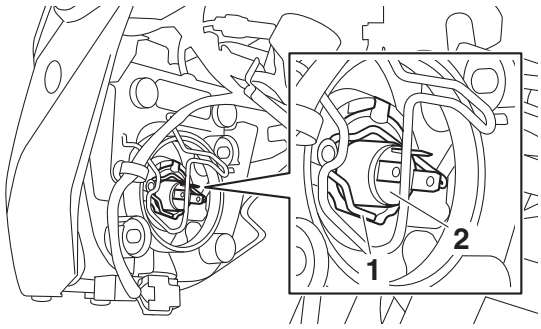

EWA13320

WARNING

Since the headlight bulb gets extremely hot, keep flammable products and your hands away from the bulb until it has cooled down.

8. Install:
   - Headlight bulb New
     Secure the new headlight bulb with the headlight bulb holder.

ECA13690

NOTICE

Avoid touching the glass part of the headlight bulb to keep it free from oil, otherwise the transparency of the glass, the life of the bulb and the luminous flux will be adversely affected. If the headlight bulb gets soiled, thoroughly clean it with a cloth moistened with alcohol or lacquer thinner.

9. Hook:
   - Headlight bulb holder
10. Install:
   - Headlight bulb cover
11. Connect:
   - Headlight coupler “1”

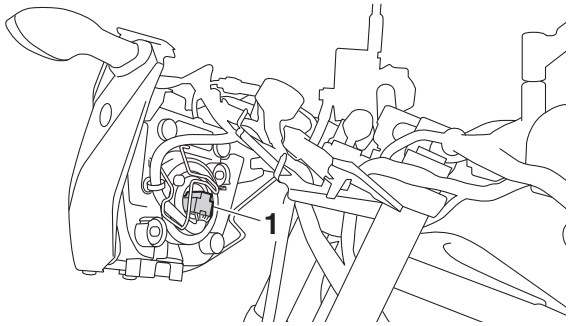

12. Install:
   - Headlight assembly “1”

TIP

Fit the holes “a” in the headlight assembly with the projection “b” on the headlight lower bracket.

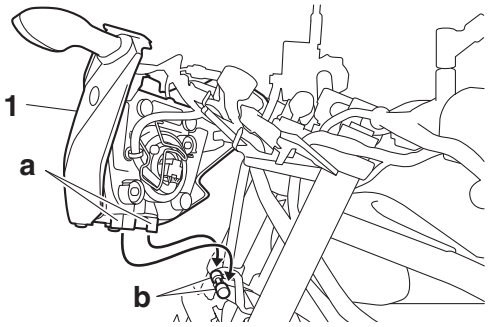

13. Install:
   - Headlight assembly bolts “1”

	Headlight assembly bolt **7 Nm (0.7 m·kgf, 5.1 ft·lbf)**

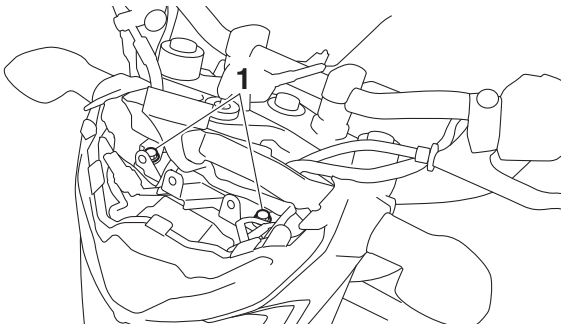

14. Install:
   - Meter assembly
     Refer to “GENERAL CHASSIS (4)” on page 4-12.

EAS30664

ADJUSTING THE HEADLIGHT BEAM

1. Adjust:
   - Headlight beam (vertically)

▼▼▼▼▼▼▼▼▼▼▼▼▼▼▼▼▼▼▼▼▼▼▼▼▼▼▼▼▼▼▼▼▼▼

TIP

To adjust the headlight beam (vertically), insert a crosshead screwdriver into the opening “a” in the headlight side cover (right) and turn the adjusting screw.

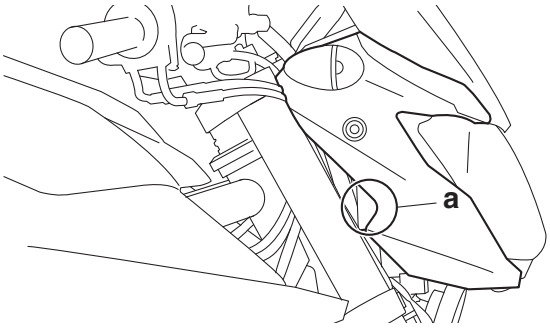

a. Turn the adjusting screw “1” in direction “b” or “c”.

Direction “b”
Headlight beam is raised.
Direction “c”
Headlight beam is lowered.

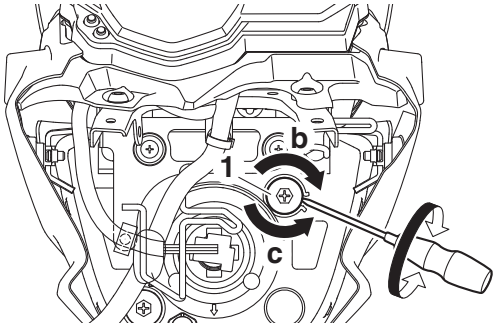

▲▲▲▲▲▲▲▲▲▲▲▲▲▲▲▲▲▲▲▲▲▲▲▲▲▲▲▲▲▲▲▲▲▲

2. Adjust:
   - Headlight beam (horizontally)

▼▼▼▼▼▼▼▼▼▼▼▼▼▼▼▼▼▼▼▼▼▼▼▼▼▼▼▼▼▼▼▼▼▼

TIP

To adjust the headlight beam (horizontally), insert a crosshead screwdriver into the opening “a” in the headlight side cover (left) and turn the adjusting screw.

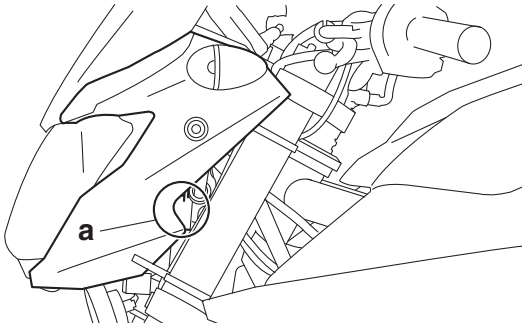

a. Turn the adjusting screw “1” in direction “b” or “c”.

Direction “b”
Headlight beam moves to the left.
Direction “c”
Headlight beam moves to the right.

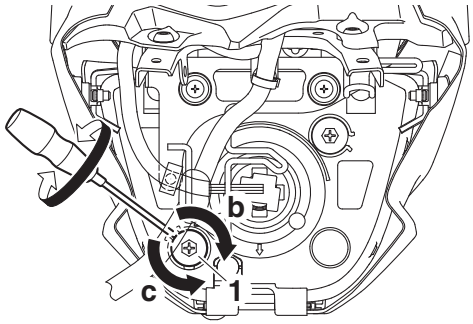

▲▲▲▲▲▲▲▲▲▲▲▲▲▲▲▲▲▲▲▲▲▲▲▲▲▲▲▲▲▲▲▲▲▲

CHASSIS

GENERAL CHASSIS (1) 4-1
REMOVING THE CENTER COVER 4-2
INSTALLING THE BATTERY 4-2
INSTALLING THE RIDER SEAT 4-2
INSTALLING THE CENTER COVER 4-2
INSTALLING THE PASSENGER SEAT 4-2

GENERAL CHASSIS (2) 4-3
REMOVING THE SIDE PANEL ASSEMBLIES 4-6
REMOVING THE UPPER TAIL PANEL 4-6
INSTALLING THE GRAB BARS 4-6
INSTALLING THE UPPER TAIL PANEL 4-6
INSTALLING THE SIDE PANEL ASSEMBLIES 4-6
INSTALLING THE REAR SIDE COWLING ASSEMBLY 4-7

GENERAL CHASSIS (3) 4-8
REMOVING THE AIR SCOOPS 4-9
INSTALLING THE BOTTOM COWLING 4-9
INSTALLING THE AIR SCOOPS 4-9
DISASSEMBLING THE FUEL TANK COVER ASSEMBLY 4-10
ASSEMBLING THE FUEL TANK COVER ASSEMBLY 4-10
INSTALLING THE FUEL TANK COVER ASSEMBLY 4-11

GENERAL CHASSIS (4) 4-12
INSTALLING THE HEADLIGHT ASSEMBLY 4-14
INSTALLING THE METER ASSEMBLY 4-14

GENERAL CHASSIS (5) 4-15
INSTALLING THE AIR FILTER CASE 4-17

FRONT WHEEL 4-18
REMOVING THE FRONT WHEEL 4-20
DISASSEMBLING THE FRONT WHEEL 4-20
CHECKING THE FRONT WHEEL 4-20
MAINTENANCE OF THE FRONT WHEEL SENSOR AND SENSOR ROTOR 4-21
ASSEMBLING THE FRONT WHEEL 4-22
ADJUSTING THE FRONT WHEEL STATIC BALANCE 4-22
INSTALLING THE FRONT WHEEL (FRONT BRAKE DISCS) 4-23

REAR WHEEL 4-26
REMOVING THE REAR WHEEL 4-30
DISASSEMBLING THE REAR WHEEL 4-30
CHECKING THE REAR WHEEL 4-30
CHECKING THE REAR WHEEL DRIVE HUB 4-30
CHECKING AND REPLACING THE REAR WHEEL SPROCKET 4-31
MAINTENANCE OF THE REAR WHEEL SENSOR AND SENSOR ROTOR 4-31
ASSEMBLING THE REAR WHEEL 4-32
ADJUSTING THE REAR WHEEL STATIC BALANCE 4-32
INSTALLING THE REAR WHEEL (REAR BRAKE DISC) 4-32

FRONT BRAKE 4-35
INTRODUCTION 4-40
CHECKING THE FRONT BRAKE DISC 4-40
REPLACING THE FRONT BRAKE PADS 4-41
REMOVING THE FRONT BRAKE CALIPER 4-42
DISASSEMBLING THE FRONT BRAKE CALIPER 4-42
CHECKING THE FRONT BRAKE CALIPER 4-43
ASSEMBLING THE FRONT BRAKE CALIPER 4-43
INSTALLING THE FRONT BRAKE CALIPER 4-43
REMOVING THE FRONT BRAKE MASTER CYLINDER 4-44
CHECKING THE FRONT BRAKE MASTER CYLINDER 4-44
ASSEMBLING THE FRONT BRAKE MASTER CYLINDER 4-45
INSTALLING THE FRONT BRAKE MASTER CYLINDER 4-45

REAR BRAKE 4-47
INTRODUCTION 4-53
CHECKING THE REAR BRAKE DISC 4-53
REPLACING THE REAR BRAKE PADS 4-53
REMOVING THE REAR BRAKE CALIPER 4-55
DISASSEMBLING THE REAR BRAKE CALIPER 4-55
CHECKING THE REAR BRAKE CALIPER 4-55
ASSEMBLING THE REAR BRAKE CALIPER 4-56
INSTALLING THE REAR BRAKE CALIPER 4-56
REMOVING THE REAR BRAKE MASTER CYLINDER 4-57
CHECKING THE REAR BRAKE MASTER CYLINDER 4-57
ASSEMBLING THE REAR BRAKE MASTER CYLINDER 4-58
INSTALLING THE REAR BRAKE MASTER CYLINDER 4-58

ABS (ANTI-LOCK BRAKE SYSTEM) 4-60
REMOVING THE HYDRAULIC UNIT ASSEMBLY 4-63
CHECKING THE HYDRAULIC UNIT ASSEMBLY 4-63
INSTALLING THE HYDRAULIC UNIT ASSEMBLY 4-63
HYDRAULIC UNIT OPERATION TESTS 4-65
CHECKING THE ABS WARNING LIGHT 4-68

HANDLEBAR 4-69
REMOVING THE HANDLEBAR 4-71
CHECKING THE HANDLEBAR 4-71
INSTALLING THE HANDLEBAR 4-71

FRONT FORK.....4-74
REMOVING THE FRONT FORK LEGS.....4-77
DISASSEMBLING THE FRONT FORK LEGS.....4-77
CHECKING THE FRONT FORK LEGS.....4-78
ASSEMBLING THE FRONT FORK LEGS.....4-78
INSTALLING THE FRONT FORK LEGS.....4-81

STEERING HEAD.....4-83
REMOVING THE LOWER BRACKET.....4-85
CHECKING THE STEERING HEAD.....4-85
INSTALLING THE STEERING HEAD.....4-85

SWINGARM AND REAR SHOCK ABSORBER ASSEMBLY.....4-87
REMOVING THE REAR SHOCK ABSORBER ASSEMBLY.....4-89
CHECKING THE REAR SHOCK ABSORBER ASSEMBLY.....4-89
REMOVING THE SWINGARM.....4-89
CHECKING THE SWINGARM.....4-89
INSTALLING THE SWINGARM.....4-90
INSTALLING THE REAR SHOCK ABSORBER ASSEMBLY.....4-90

CHAIN DRIVE.....4-92
REMOVING THE DRIVE CHAIN.....4-93
CHECKING THE DRIVE CHAIN.....4-93
CHECKING THE DRIVE SPROCKET.....4-94
CHECKING THE REAR WHEEL SPROCKET.....4-94
CHECKING THE REAR WHEEL DRIVE HUB.....4-94
INSTALLING THE DRIVE SPROCKET.....4-94
INSTALLING THE DRIVE CHAIN.....4-95

EAS20026

GENERAL CHASSIS (1)

Removing the seats and battery

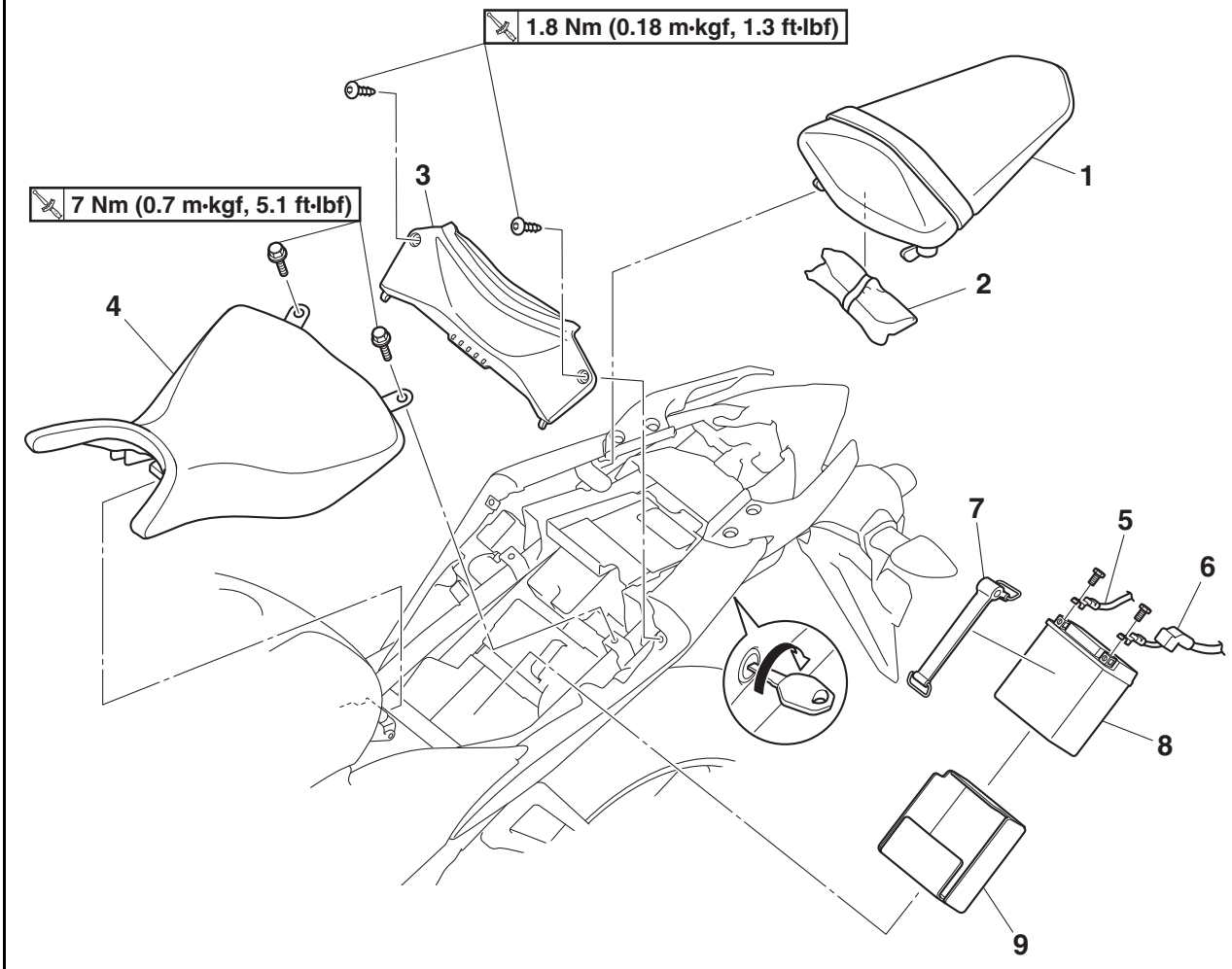

Order	Job/Parts to remove	Q'ty	Remarks
1	Passenger seat	1	
2	Owner's tool kit	1	
3	Center cover	1	
4	Rider seat	1	
5	Negative battery lead	1	Disconnect.
6	Positive battery lead	1	Disconnect.
7	Battery band	1	
8	Battery	1	
9	Battery seat	1	

EAS31189
REMOVING THE CENTER COVER
1. Remove:
   • Center cover “1”

TIP

Unhook the projections “a” on the center cover from the rear upper side cowlings.

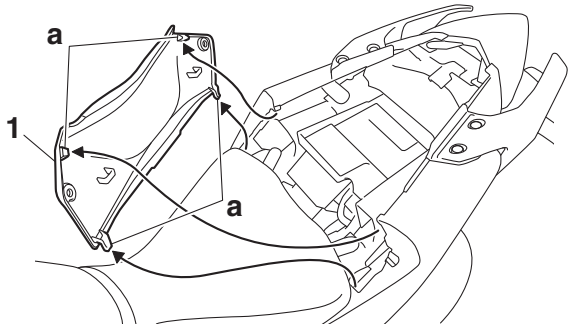

EAS30697
INSTALLING THE BATTERY
1. Install:
   • Battery “1”
   • Battery band “2”

TIP

Make sure that the portion “a” of the battery band is facing upward.

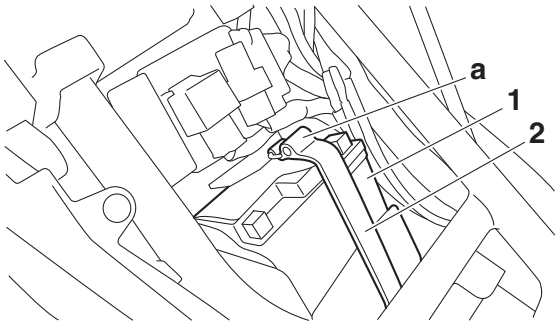

EAS31125
INSTALLING THE RIDER SEAT
1. Install:
   • Rider seat “1”

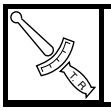	**Rider seat bolt** **7 Nm (0.7 m·kgf, 5.1 ft·lbf)**

TIP

Insert the projection “a” on the front of the rider seat into the hole “b” as shown.

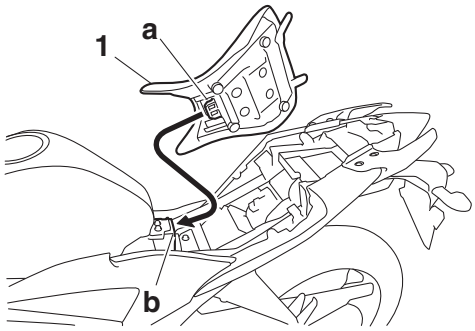

EAS31190
INSTALLING THE CENTER COVER
1. Install:
   • Center cover “1”

	Center cover screw **1.8 Nm (0.18 m·kgf, 1.3 ft·lbf)**

TIP

Fit the projections “a” on the center cover into the rear upper side cowlings.

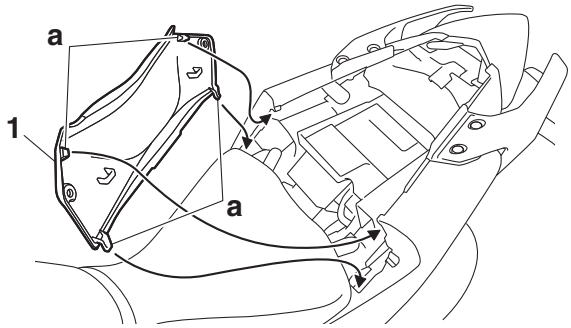

EAS31126
INSTALLING THE PASSENGER SEAT
1. Install:
   • Passenger seat “1”

TIP

Insert the projections “a” on the front of the passenger seat into the grooves “b” as shown, and then push the rear of the seat down to lock it in place.

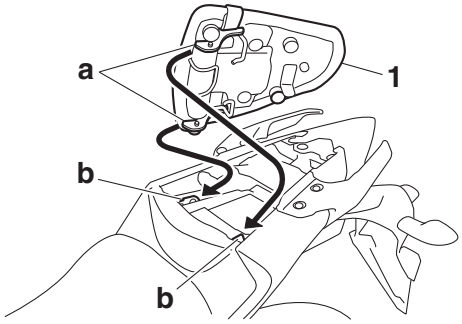

EAS20155

GENERAL CHASSIS (2)

Removing the rear side cowlings

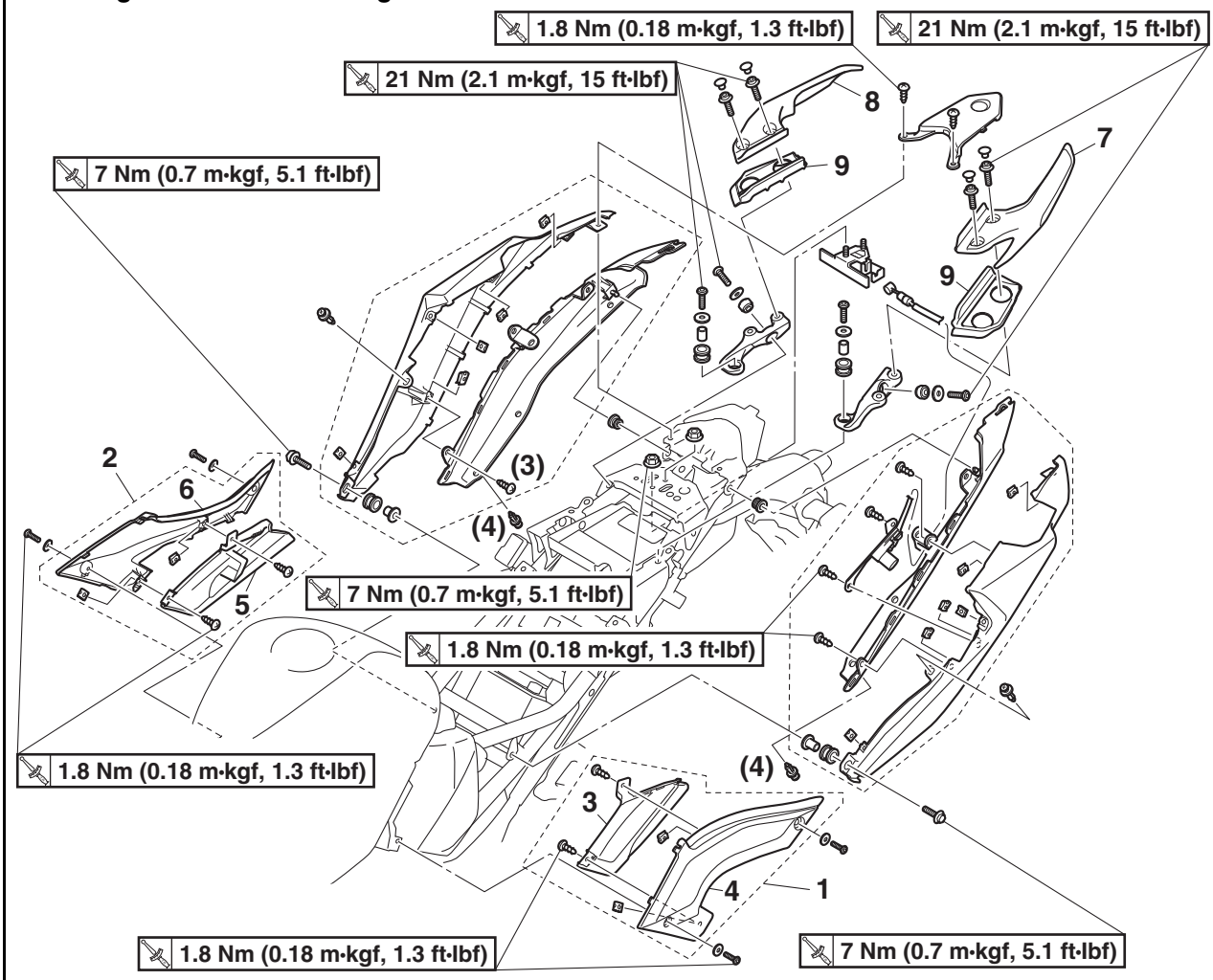

Order	Job/Parts to remove	Q'ty	Remarks
	Rider seat		Refer to "GENERAL CHASSIS (1)" on page 4-1.
1	Side panel assemblies (left)	1	
2	Side panel assemblies (right)	1	
3	Lower side panel (left)	1	
4	Upper side panel (left)	1	
5	Lower side panel (right)	1	
6	Upper side panel (right)	1	
7	Grab bar (left)	1	
8	Grab bar (right)	1	
9	Cover	2	

Removing the rear side cowlings

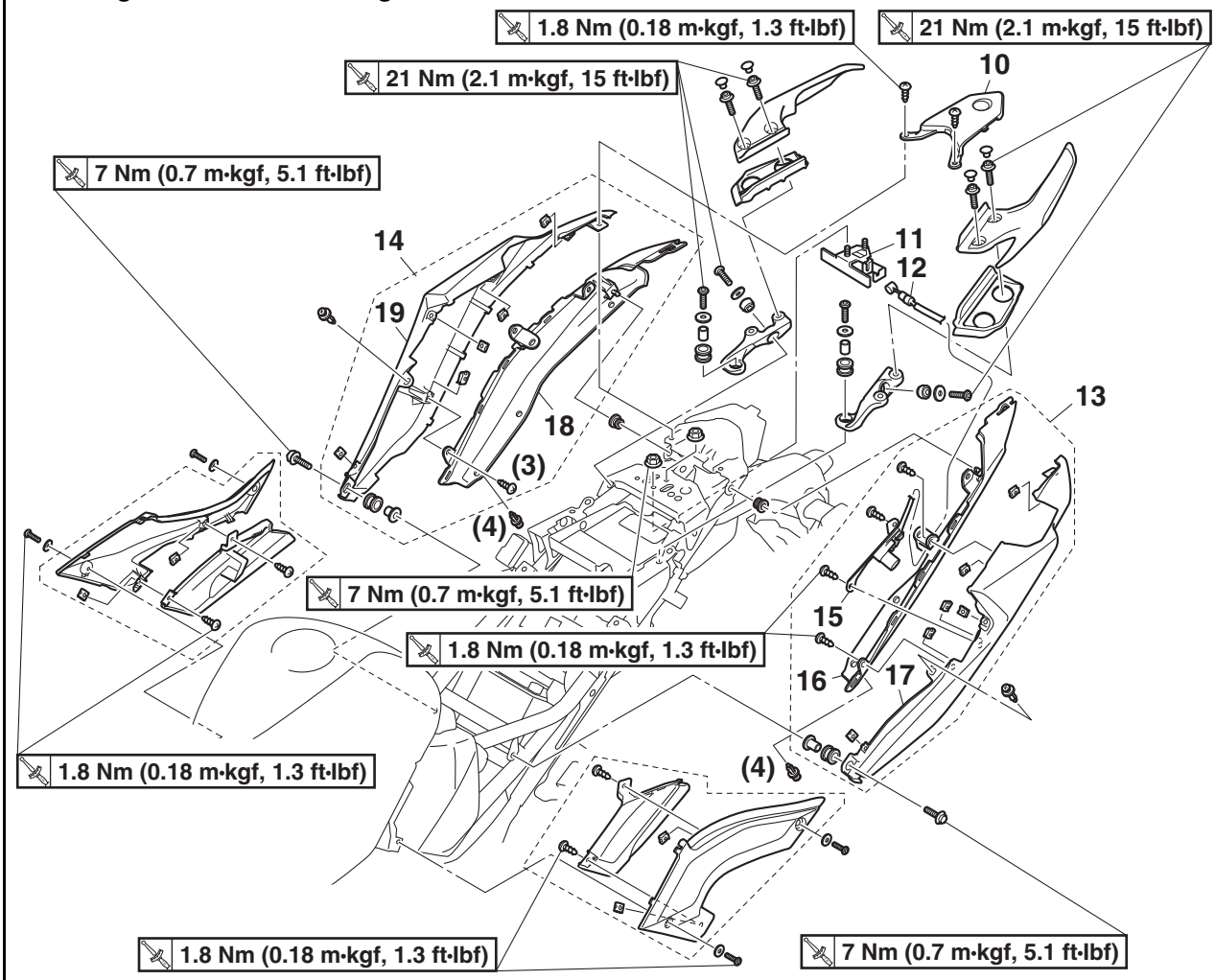

Order	Job/Parts to remove	Q'ty	Remarks
10	Upper tail panel	1	
11	Seat lock	1	
12	Seat lock cable	1	Disconnect.
13	Rear side cowling assembly (left)	1	
14	Rear side cowling assembly (right)	1	
15	Seat lock key cylinder	1	
16	Rear lower side cowling (left)	1	
17	Rear upper side cowling (left)	1	
18	Rear lower side cowling (right)	1	
19	Rear upper side cowling (right)	1	

Removing the rear side cowlings

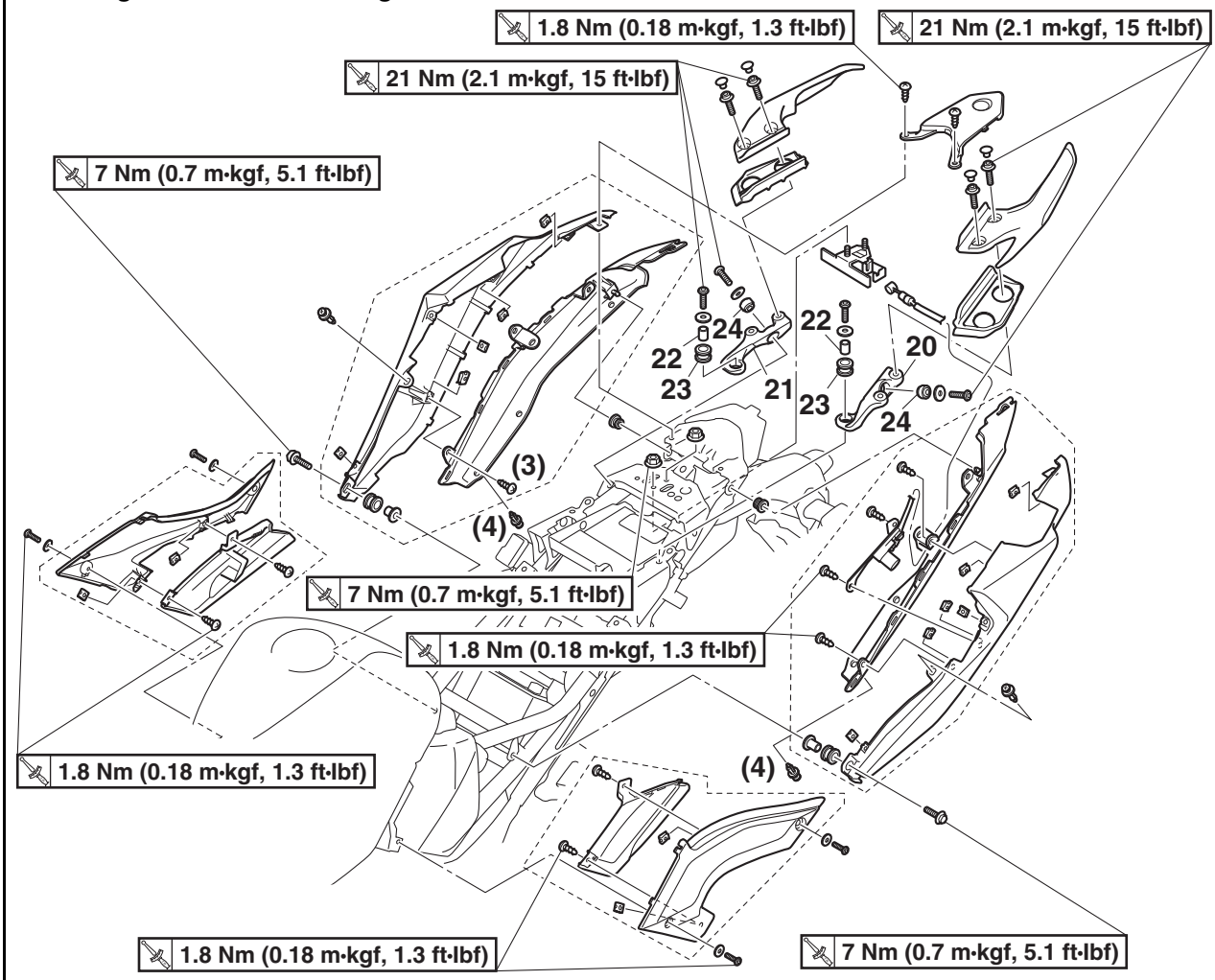

Order	Job/Parts to remove	Q'ty	Remarks
20	Grab bar bracket (left)	1	
21	Grab bar bracket (right)	1	
22	Collar	2	
23	Grommet	2	
24	Damper	2	

EAS31786
REMOVING THE SIDE PANEL ASSEMBLIES

The following procedure applies to both of the side panel assemblies.

1. Remove:
   - Side panel assembly "1"

▼▼▼▼▼▼▼▼▼▼▼▼▼▼▼▼▼▼▼▼▼▼▼▼▼▼▼▼▼▼▼▼▼▼▼

a. Remove the side panel bolts.
b. Remove the projection "a" on the side panel from the hole "b" in the air scoop "2".
c. Remove the projection "c" on the side panel from the air scoop "2".

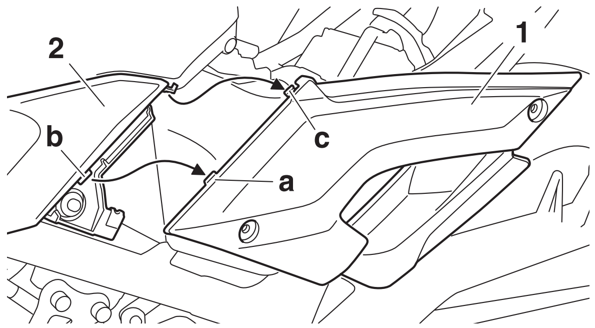

▲▲▲▲▲▲▲▲▲▲▲▲▲▲▲▲▲▲▲▲▲▲▲▲▲▲▲▲▲▲▲▲▲▲▲

EAS31292
REMOVING THE UPPER TAIL PANEL

1. Remove:
   - Upper tail panel "1"

▼▼▼▼▼▼▼▼▼▼▼▼▼▼▼▼▼▼▼▼▼▼▼▼▼▼▼▼▼▼▼▼▼▼▼

a. Remove the upper tail panel screws.
b. Slide the upper tail panel rearward and remove it.

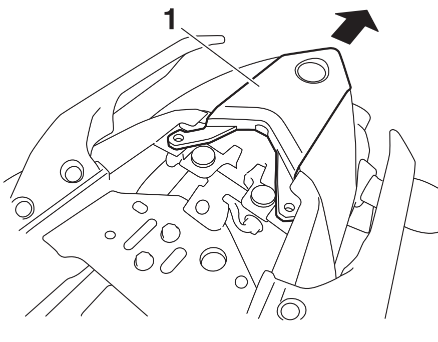

▲▲▲▲▲▲▲▲▲▲▲▲▲▲▲▲▲▲▲▲▲▲▲▲▲▲▲▲▲▲▲▲▲▲▲

EAS31771
INSTALLING THE GRAB BARS

The following the procedure applies both of the grab bars.

1. Install:
   - Damper "1" (to the grab bar bracket "2")

	Installed length "a" **1.0 mm (0.04 in)**

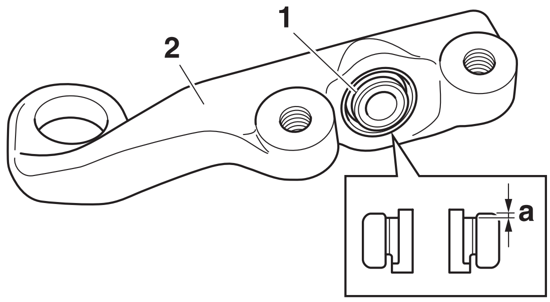

EAS31293
INSTALLING THE UPPER TAIL PANEL

1. Install:
   - Upper tail panel "1"

▼▼▼▼▼▼▼▼▼▼▼▼▼▼▼▼▼▼▼▼▼▼▼▼▼▼▼▼▼▼▼▼▼▼▼

a. Fit the projections "a" on the upper tail panel into the holes "b" in the rear lower side cowlings, and then slide the panel forward while fitting the projection "c" on the tail/brake light assembly into the slots "d" in the panel ribs, and then slide the panel forward.
b. Install the upper tail panel screws, and then tighten the screws to specification.

	Upper tail panel screw **1.8 Nm (0.18 m·kgf, 1.3 ft·lbf)**

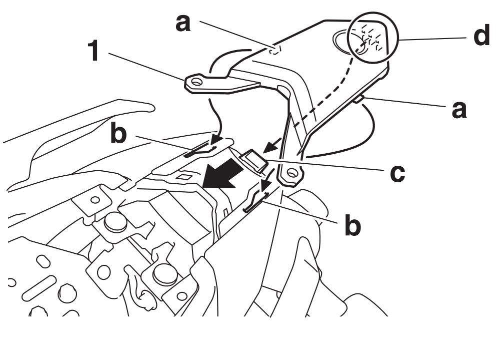

▲▲▲▲▲▲▲▲▲▲▲▲▲▲▲▲▲▲▲▲▲▲▲▲▲▲▲▲▲▲▲▲▲▲▲

EAS31769
INSTALLING THE SIDE PANEL ASSEMBLIES

The following procedure applies to both of the side panel assemblies.

1. Install:
   - Lower side panel "1" (to the upper side panel "2")

	Side panel screw **1.8 Nm (0.18 m·kgf, 1.3 ft·lbf)**

TIP

Fit the hole "a" in the lower side panel over the projection "b" on the upper side panel.

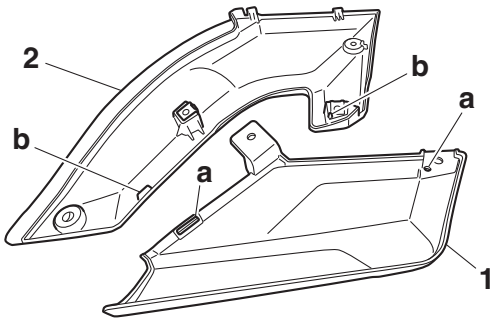

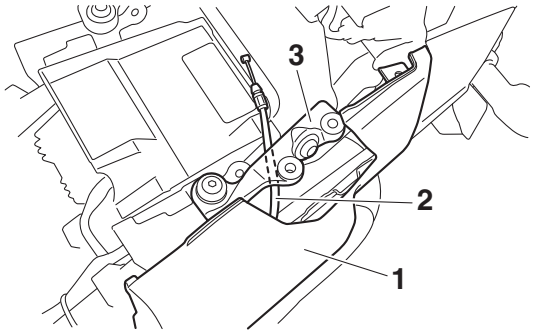

2. Install:
   - Side panel assembly “1”

▼▼▼▼▼▼▼▼▼▼▼▼▼▼▼▼▼▼▼▼▼▼▼▼▼▼▼▼▼▼▼▼▼▼

a. Fit the portion “a” of the side panel assembly over the projection “b” on the air scoop “2”, and insert the projection “c” on the side panel assembly into the slot “d” in the air scoop.
b. Insert the projection “e” on the side panel assembly into the hole “f” in the air scoop.
c. Fit the projection “g” on the side panel assembly into the hole “h” in the air scoop.
d. Install the side panel bolts, and then tighten the bolts to specification.

	Side panel bolt **1.8 Nm (0.18 m·kgf, 1.3 ft·lbf)**

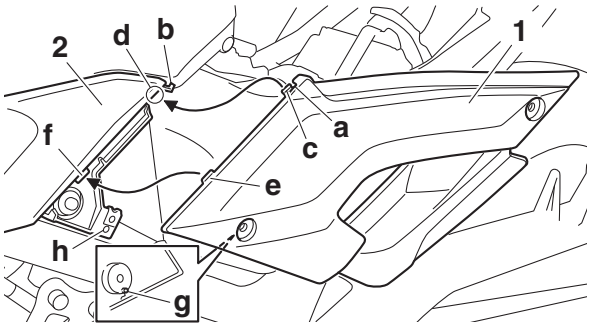

▲▲▲▲▲▲▲▲▲▲▲▲▲▲▲▲▲▲▲▲▲▲▲▲▲▲▲▲▲▲▲▲▲▲

EAS31770

INSTALLING THE REAR SIDE COWLING ASSEMBLY

1. Install:
   - Rear side cowling assembly (left) “1”

	Rear side cowling bolt **7 Nm (0.7 m·kgf, 5.1 ft·lbf)**

TIP

Route the seat lock cable “2” between the grab bar bracket (left) “3” and the frame.

EAS20156

GENERAL CHASSIS (3)

Removing the fuel tank covers

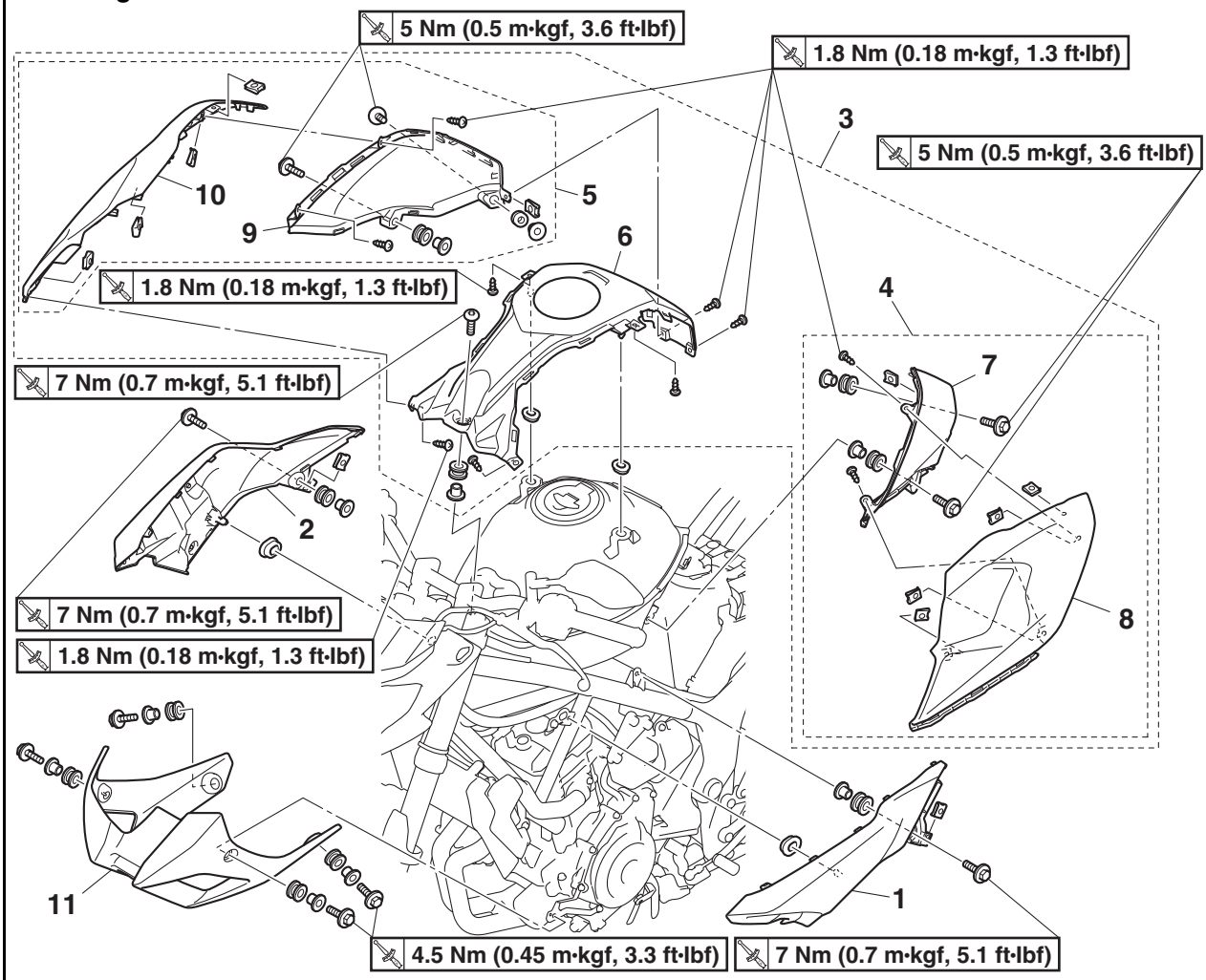

Order	Job/Parts to remove	Q'ty	Remarks
	Rider seat		Refer to "GENERAL CHASSIS (1)" on page 4-1.
	Side panel assemblies		Refer to "GENERAL CHASSIS (2)" on page 4-3.
1	Air scoop (left)	1	
2	Air scoop (right)	1	
3	Fuel tank cover assembly	1	
4	Fuel tank side cover assembly (left)	1	
5	Fuel tank side cover assembly (right)	1	
6	Fuel tank center cover	1	
7	Fuel tank rear side cover (left)	1	
8	Fuel tank front side cover (left)	1	
9	Fuel tank rear side cover (right)	1	
10	Fuel tank front side cover (right)	1	
11	Bottom cowling	1	

EAS31772
REMOVING THE AIR SCOOPS
The following procedure applies to both of the air scoops.
1. Remove:
   - Air scoop “1”

▼▼▼▼▼▼▼▼▼▼▼▼▼▼▼▼▼▼▼▼▼▼▼▼▼▼▼▼▼▼▼▼▼▼

a. Remove the air scoop bolt.
b. Remove the projection “a” on the air scoop from the hole “b” in the frame, and then remove the projections “c” on the air scoop from the holes “d” in the fuel tank side cover.

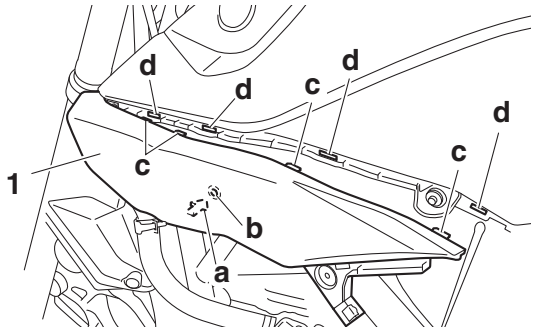

c. Slide the air scoop “1” rearward, and then remove the projection “e” on the air scoop from the hole “f” in the fuel tank side cover.

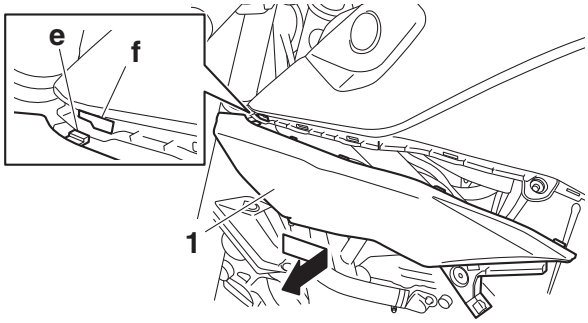

▲▲▲▲▲▲▲▲▲▲▲▲▲▲▲▲▲▲▲▲▲▲▲▲▲▲▲▲▲▲▲▲▲▲

EAS31357
INSTALLING THE BOTTOM COWLING
1. Install:
   - Bottom cowling “1”

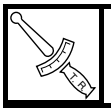	**Bottom cowling bolt** **4.5 Nm (0.45 m·kgf, 3.3 ft·lbf)**

TIP

Fit the projections “a” on the bottom cowling into the holes “b” in the bottom cowling bracket “2”.

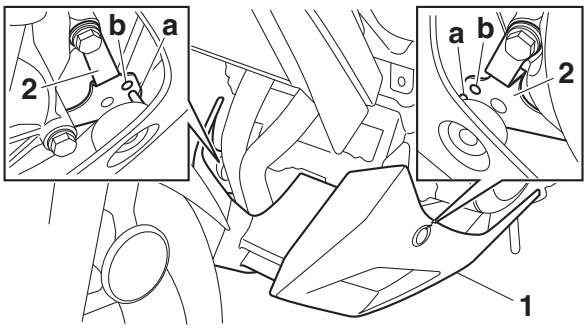

EAS31773
INSTALLING THE AIR SCOOPS
The following procedure applies to both of the air scoops.
1. Install:
   - Air scoop “1”

▼▼▼▼▼▼▼▼▼▼▼▼▼▼▼▼▼▼▼▼▼▼▼▼▼▼▼▼▼▼▼▼▼▼

a. Insert the projection “a” on the air scoop into the hole “b” in the fuel tank side cover, and then slide the air scoop forward.

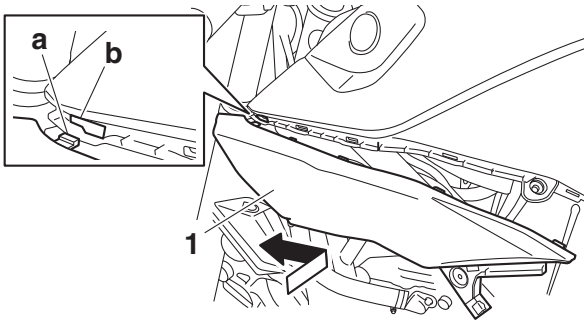

b. Insert the projections “c” on the air scoop into the holes “d” in the fuel tank side cover, and then insert the projection “e” on the air scoop into the hole “f” in the frame.

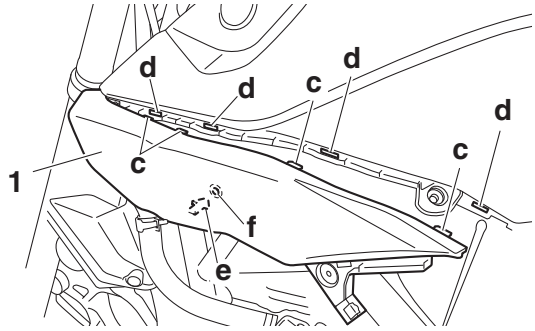

c. Install the air scoop bolt, and then tighten the bolt to specification.

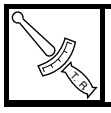	**Air scoop bolt** **7 Nm (0.7 m·kgf, 5.1 ft·lbf)**

▲▲▲▲▲▲▲▲▲▲▲▲▲▲▲▲▲▲▲▲▲▲▲▲▲▲▲▲▲▲▲▲▲▲

EAS31354
DISASSEMBLING THE FUEL TANK COVER ASSEMBLY

The following procedure applies to both of the fuel tank side covers.

1. Remove the fuel tank cover screws.
2. Remove the projections “a” on the fuel tank side cover assembly “1” from the holes “b” in the fuel tank center cover “2”.

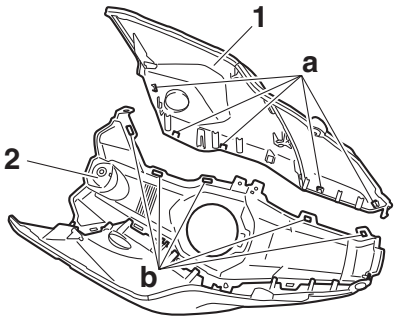

3. Remove the fuel tank side cover screws.
4. Remove the projections “a” on the fuel tank front side cover “1” from the holes “b” in the fuel tank rear side cover “2”.

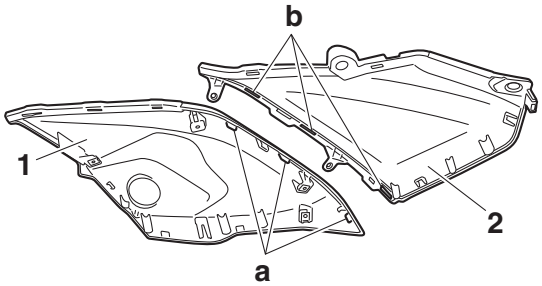

EAS31355
ASSEMBLING THE FUEL TANK COVER ASSEMBLY

The following procedure applies to both of the fuel tank side covers.

1. Insert the projections “a” on the fuel tank front side cover “1” into the holes “b” in the fuel tank rear side cover “2”.

TIP

Fit the projection “c” on the fuel tank front side cover into the hole “d” in the fuel tank rear side cover.

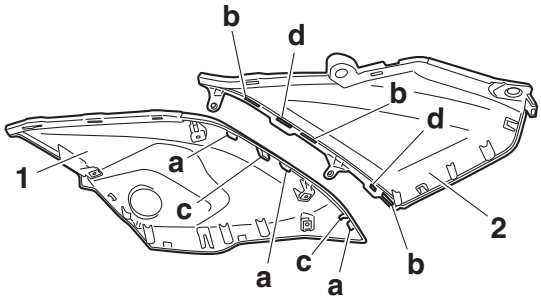

2. Install the fuel tank side cover screws, and then tighten the screws to specification.

	Fuel tank side cover screw **1.8 Nm (0.18 m·kgf, 1.3 ft·lbf)**

3. Insert the projections “a” on the fuel tank side cover assembly “1” into the holes “b” in the fuel tank center cover “2”, and insert the portions “c” of the center cover into the slots “d” in the side cover assembly.

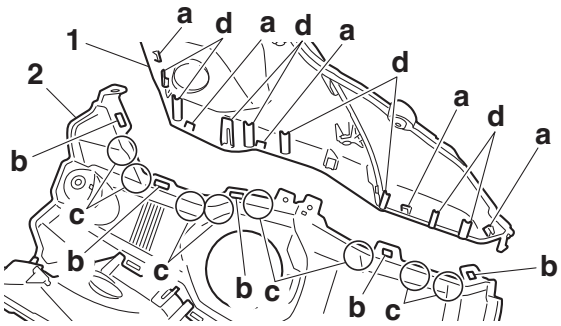

4. Install the fuel tank cover screws, and then tighten the screws to specification.

	Fuel tank cover screw **1.8 Nm (0.18 m·kgf, 1.3 ft·lbf)**

TIP

Tighten the fuel tank cover screws in the proper tightening sequence as shown.

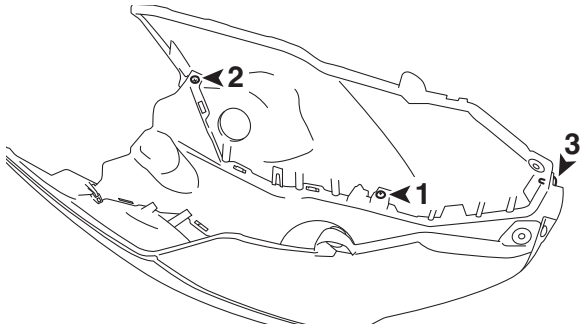

EAS31456

INSTALLING THE FUEL TANK COVER ASSEMBLY

1. Install:
   - Fuel tank cover assembly “1”

	Fuel tank cover bolt (front side) **7 Nm (0.7 m·kgf, 5.1 ft·lbf)** **Fuel tank cover bolt (rear side)** **5 Nm (0.5 m·kgf, 3.6 ft·lbf)**

TIP

- Make sure that the lip “a” of the fuel tank cap gasket is not pinched between the fuel tank cover assembly and the fuel tank.
- Tighten the fuel tank cover bolts in the proper tightening sequence as shown.

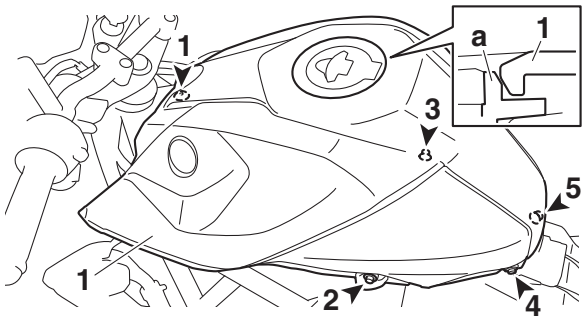

EAS20157

GENERAL CHASSIS (4)

Removing the headlight assembly and meter assembly

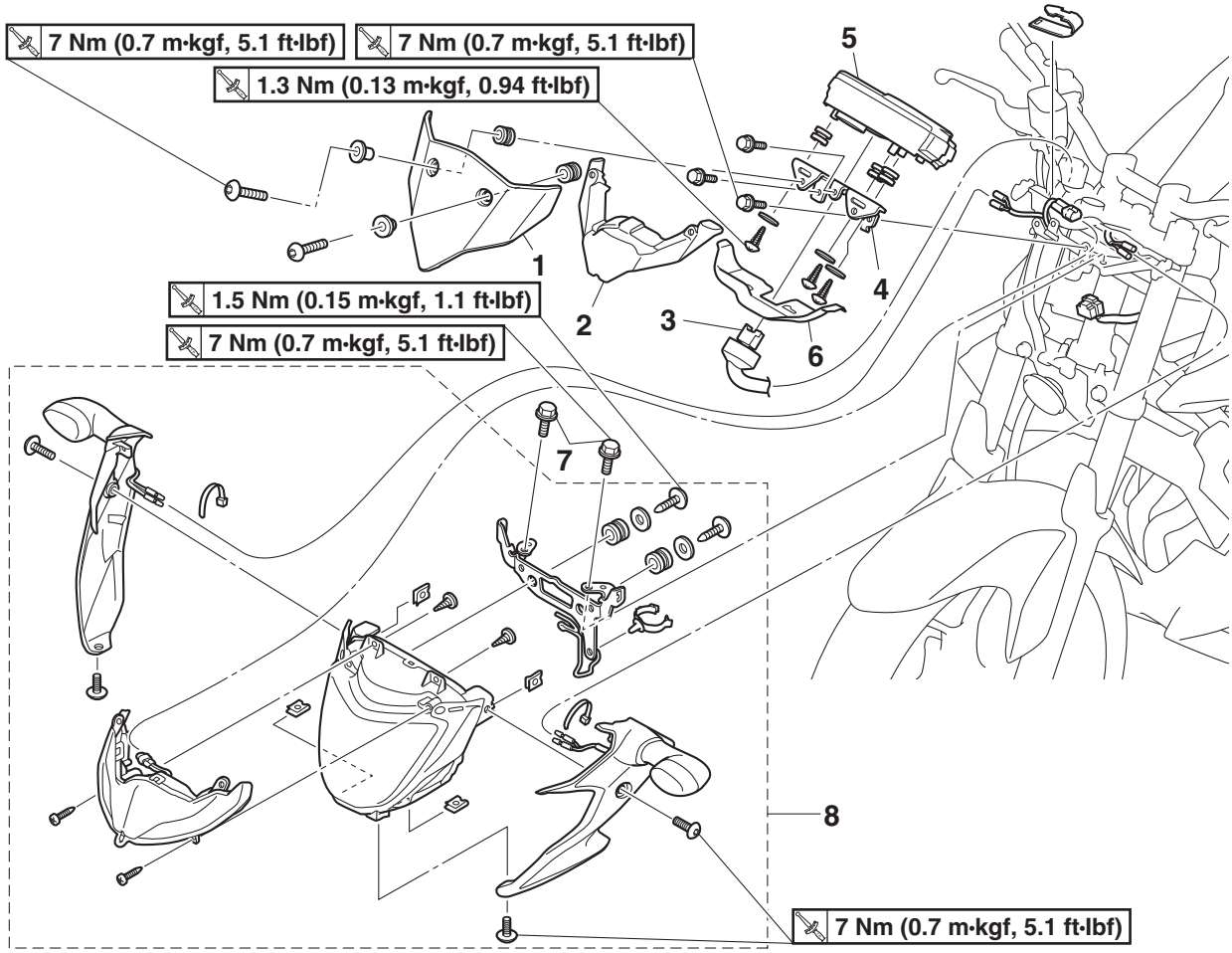

Order	Job/Parts to remove	Q'ty	Remarks
1	Headlight top cover	1	
2	Headlight inner cover	1	
3	Meter assembly coupler	1	Disconnect.
4	Meter assembly bracket	1	
5	Meter assembly	1	
6	Cover	1	
7	Headlight bolt	2	
8	Headlight assembly	1	

Removing the headlight assembly and meter assembly

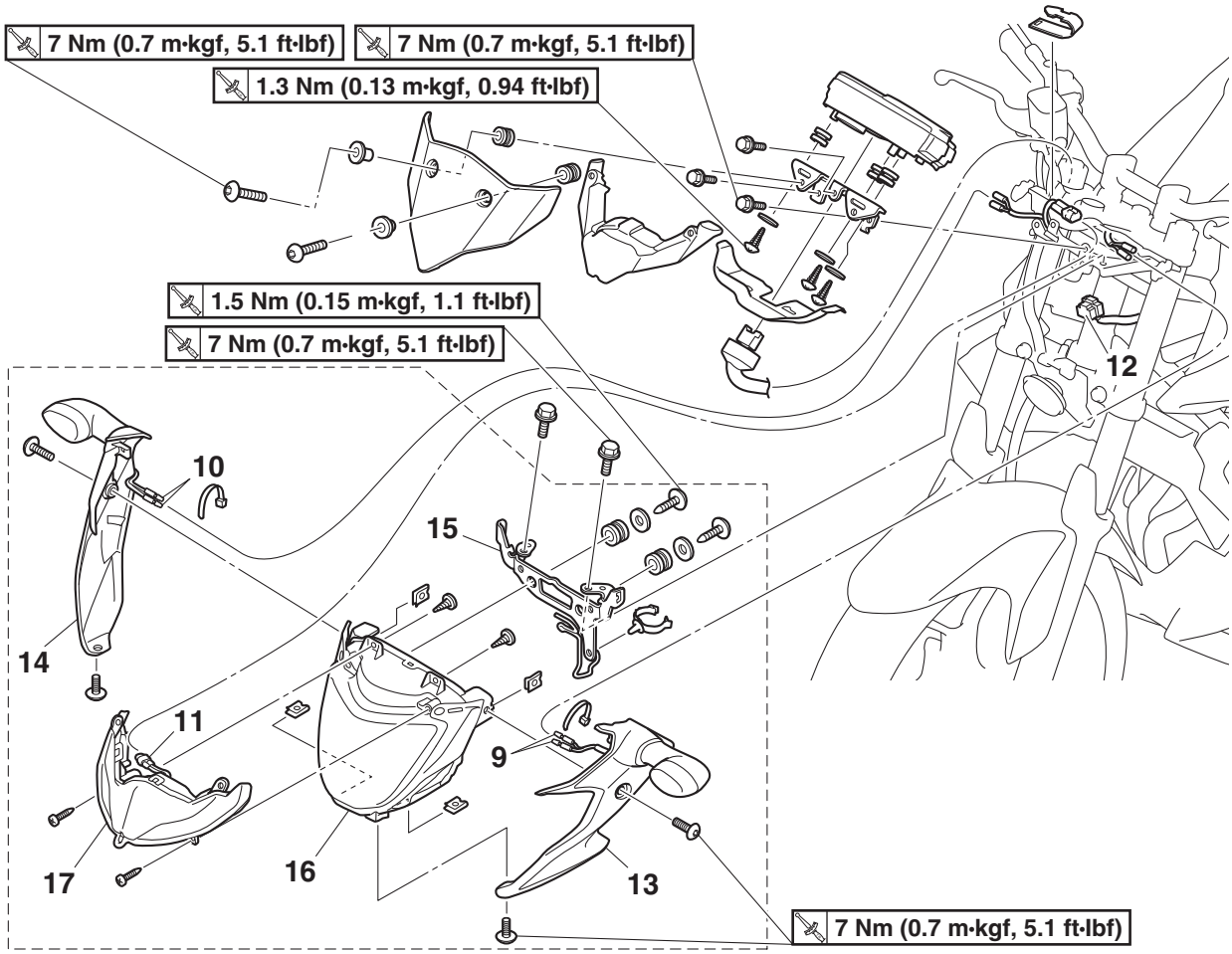

Order	Job/Parts to remove	Q'ty	Remarks
9	Front turn signal light connector (left)	2	Disconnect.
10	Front turn signal light connector (right)	2	Disconnect.
11	Auxiliary light coupler	1	Disconnect.
12	Headlight coupler	1	Disconnect.
13	Headlight side cover (left)	1	
14	Headlight side cover (right)	1	
15	Headlight bracket	1	
16	Headlight	1	
17	Auxiliary light	1	

EAS30825
INSTALLING THE HEADLIGHT ASSEMBLY

1. Install:
   - Headlight assembly “1”
   - Headlight assembly bolts

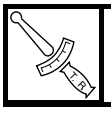	**Headlight assembly bolt** **7 Nm (0.7 m·kgf, 5.1 ft·lbf)**

TIP

Fit the holes “a” in the headlight assembly with the projections “b” on the headlight lower bracket.

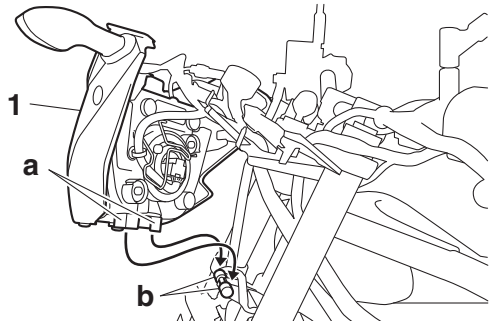

EAS31774
INSTALLING THE METER ASSEMBLY

1. Install:
   - Cover “1”
   - Meter assembly
     (to the meter assembly bracket)
   - Meter assembly bracket

	Meter assembly screw **1.3 Nm (0.13 m·kgf, 0.94 ft·lbf)** **Meter assembly bracket bolt** **7 Nm (0.7 m·kgf, 5.1 ft·lbf)**

TIP

Install the cover with the hole “a” in the cover on the left side of the vehicle.

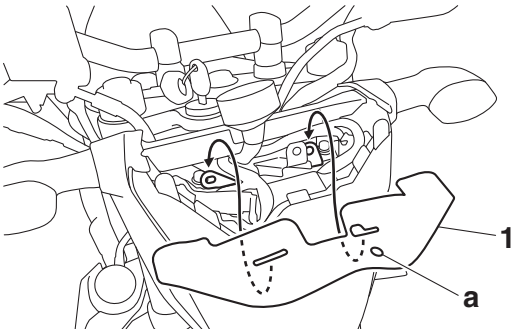

EAS20158

GENERAL CHASSIS (5)

Removing the air filter case

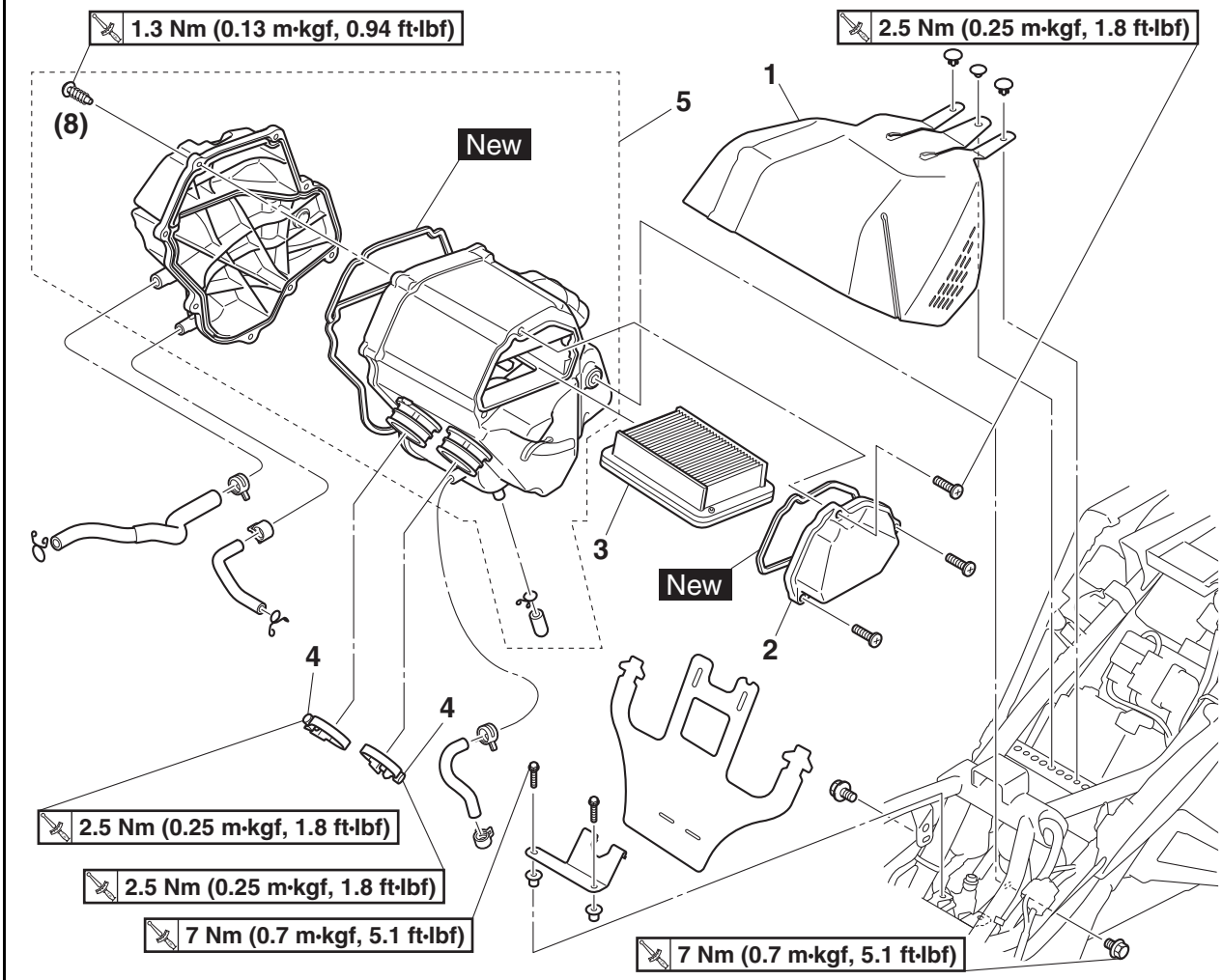

Order	Job/Parts to remove	Q'ty	Remarks
	Rider seat		Refer to "GENERAL CHASSIS (1)" on page 4-1.
	Side panel assembly		Refer to "GENERAL CHASSIS (2)" on page 4-3.
	Fuel tank cover assembly		Refer to "GENERAL CHASSIS (3)" on page 4-8.
	Fuel tank		Refer to "FUEL TANK" on page 7-1.
1	Air filter case cover	1	
2	Air filter case side cover (left)	1	
3	Air filter element	1	
4	Air filter case joint clamp screw	2	Loosen.
5	Air filter case assembly	1	

Removing the air filter case

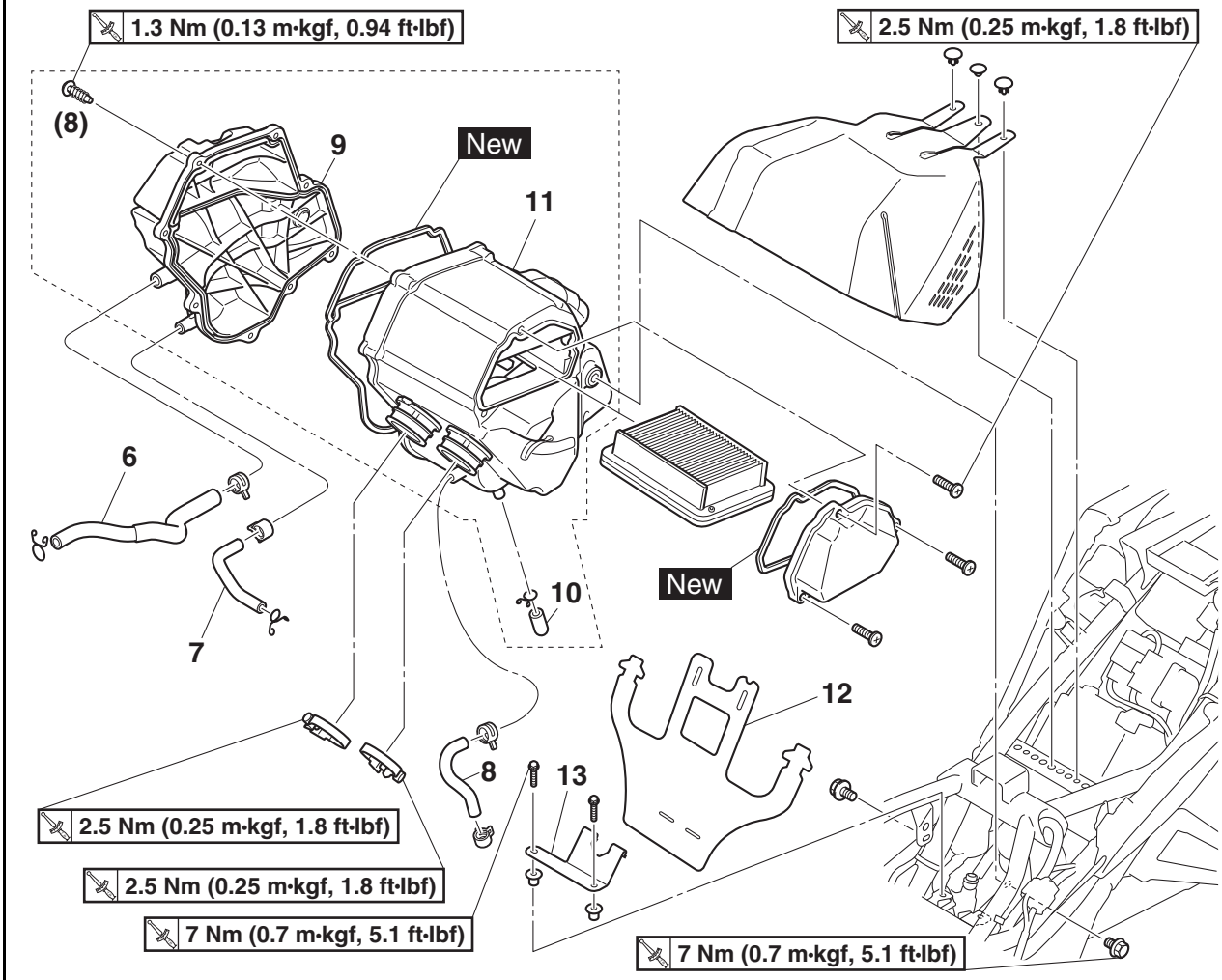

Order	Job/Parts to remove	Q'ty	Remarks
6	Air induction system hose (Air filter case side cover (right) to air cut-off valve)	1	
7	ISC (Idle Speed Control) unit inlet hose	1	
8	Crankcase breather hose	1	
9	Air filter case side cover (right)	1	
10	Air filter check hose	1	
11	Air filter case	1	
12	Flap	1	
13	Flap stay	1	

EAS31064
INSTALLING THE AIR FILTER CASE

1. Install:
   - Flap stay “1”
   - Flap “2”

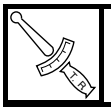	**Flap stay bolt** **7 Nm (0.7 m·kgf, 5.1 ft·lbf)**

TIP

- Install the flap with the cutout “a” in the flap on the left side of the vehicle.
- Make sure that the projections on the flap stay fit into the holes “b” in the flap.
- Pass the portions “c” and “d” of the flap through the openings in the frame, and then pull the ends of the portions through the holes “e” and “f” respectively from below as shown in the illustration.

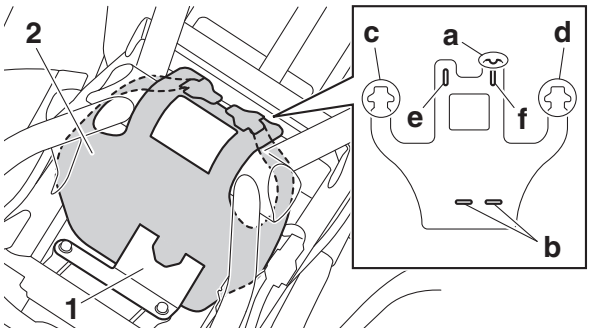

2. Install:
   - Air filter case assemblies
   - Air filter case joint clamps “1”

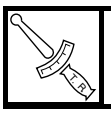	**Air filter case joint clamp screw** **2.5 Nm (0.25 m·kgf, 1.8 ft·lbf)**

TIP

Align the projection “a” on the air filter case joint with the slot “b” in the air filter case joint clamp.

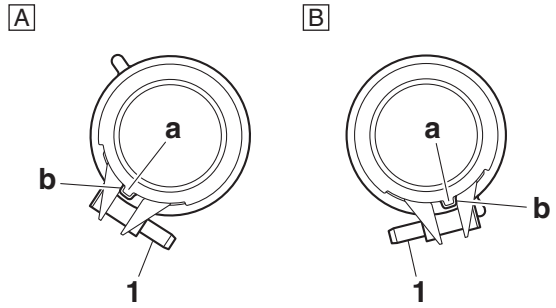

A. Right side
B. Left side

3. Install:
   - Air filter case cover “1”

TIP

Install the air filter case cover as shown in the illustration, and then install the quick fasteners (black) “2” and quick fastener (white) “3”.

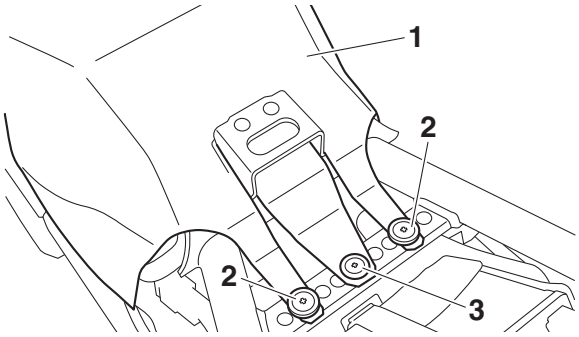

EAS20028

FRONT WHEEL

Removing the front wheel and brake disc

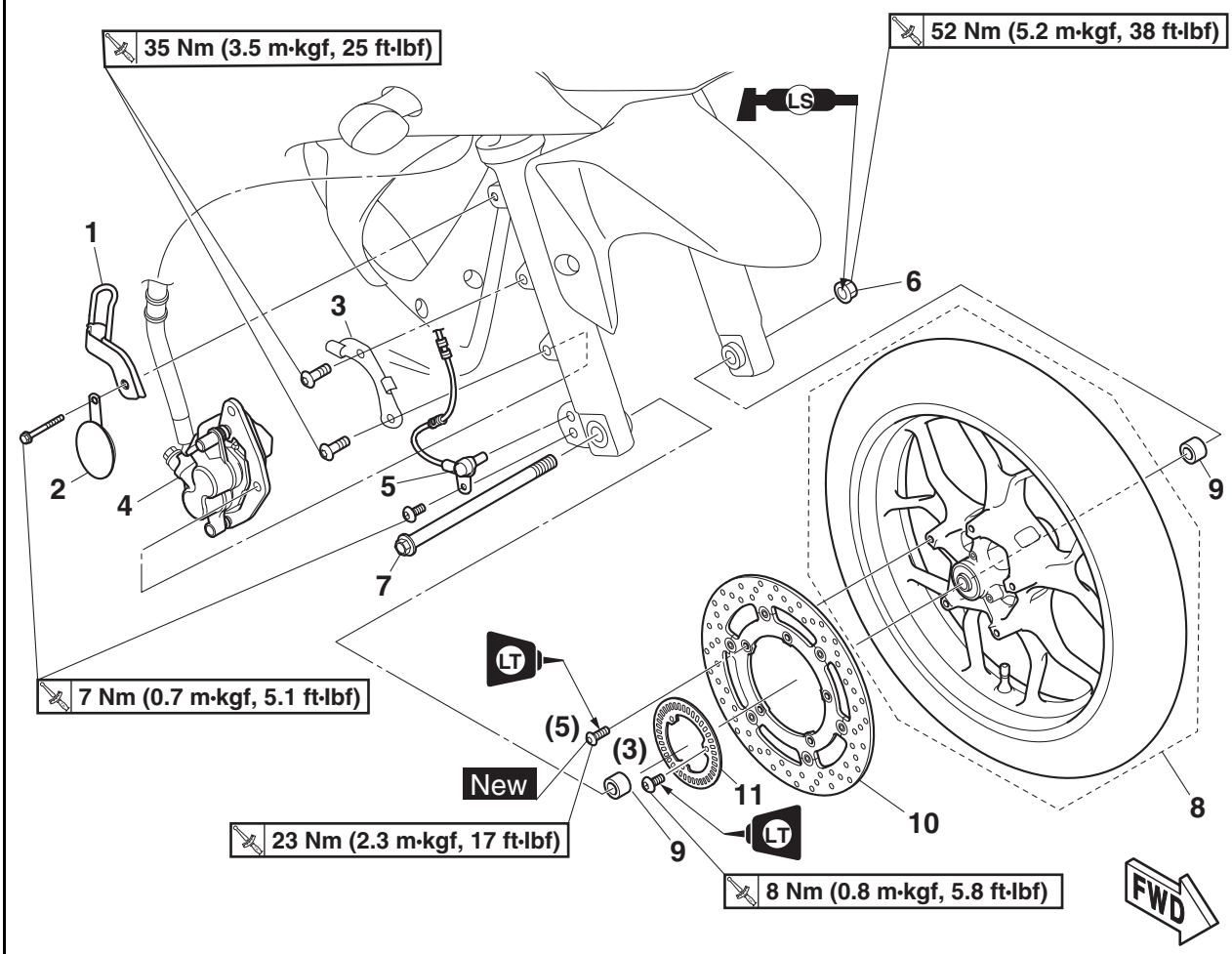

Order	Job/Parts to remove	Q'ty	Remarks
1	Front brake hose holder	1	
2	Reflector	1	
3	Front wheel sensor lead holder	1	
4	Front brake caliper	1	
5	Front wheel sensor	1	
6	Front wheel axle nut	1	
7	Front wheel axle	1	
8	Front wheel	1	
9	Collar	2	
10	Front brake disc	1	
11	Front wheel sensor rotor	1	

Disassembling the front wheel

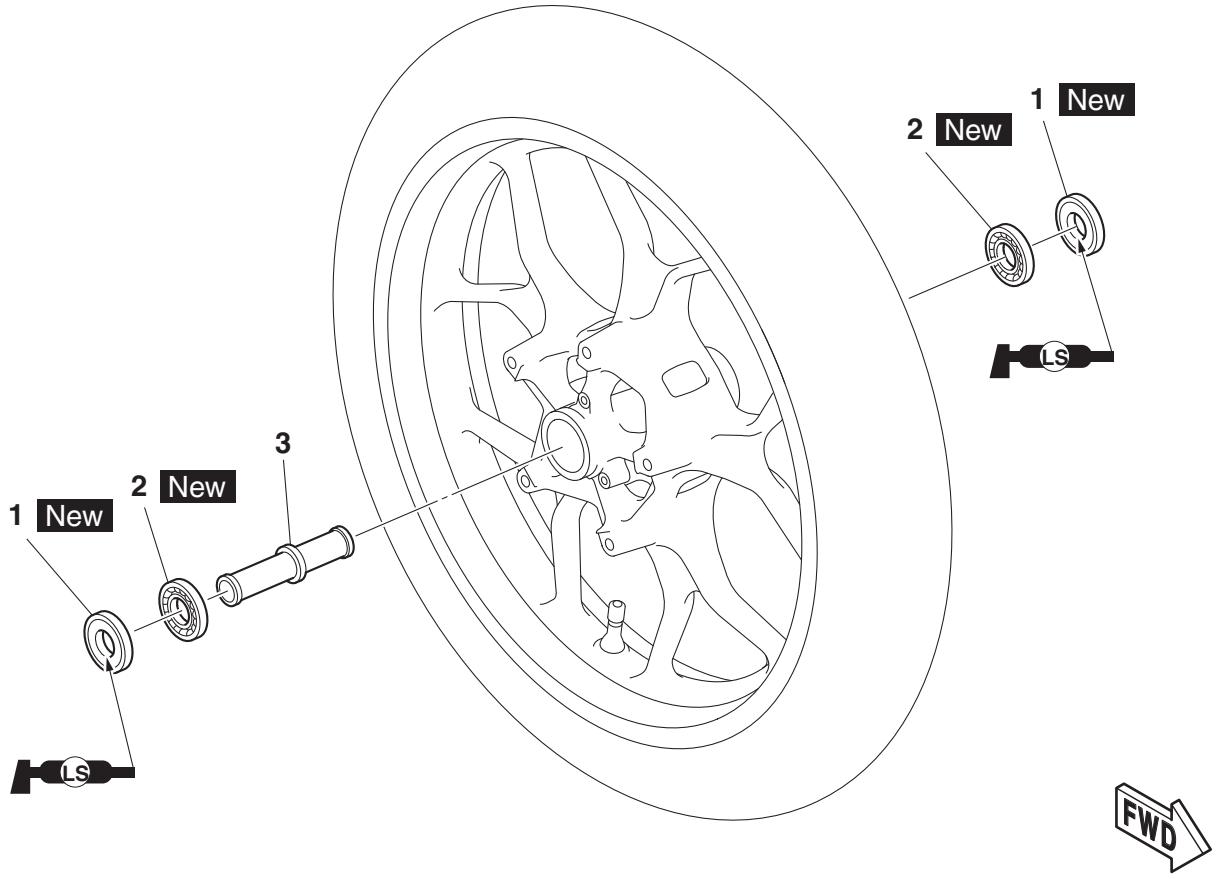

Order	Job/Parts to remove	Q'ty	Remarks
1	Oil seal	2	
2	Wheel bearing	2	
3	Spacer	1	

EAS30145

REMOVING THE FRONT WHEEL

ECA20981

NOTICE

- **Keep any type of magnets (including magnetic pick-up tools, magnetic screwdrivers, etc.) away from the front wheel sensor or front wheel sensor rotor; otherwise, the sensor or rotor may be damaged, resulting in improper performance of the ABS system.**
- **Do not drop the front wheel sensor rotor or subject it to shocks.**
- **If any solvent gets on the front wheel sensor rotor, wipe it off immediately.**

1. Stand the vehicle on a level surface.

EWA13120

WARNING

Securely support the vehicle so that there is no danger of it falling over.

2. Remove:
   - Front brake hose holder
   - Front brake caliper

ECA20990

NOTICE

- **Do not apply the brake lever when removing the brake calipers.**
- **Be sure not to contact the sensor electrode to any metal part when removing the front wheel sensor from the outer tube.**

3. Elevate:
   - Front wheel

TIP

Place the vehicle on a suitable stand so that the front wheel is elevated.

4. Remove:
   - Front wheel axle nut
   - Front wheel axle
   - Front wheel

EAS30146

DISASSEMBLING THE FRONT WHEEL

1. Remove:
   - Oil seals
   - Wheel bearings

▼▼▼▼▼▼▼▼▼▼▼▼▼▼▼▼▼▼▼▼▼▼▼▼▼▼▼▼▼▼▼▼▼▼▼

a. Clean the surface of the front wheel hub.
b. Remove the oil seals "1" with a flat-head screwdriver.

TIP

To prevent damaging the wheel, place a rag "2" between the screwdriver and the wheel surface.

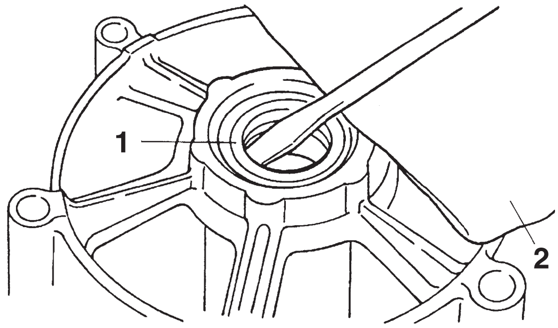

c. Remove the wheel bearings "3" with a general bearing puller.

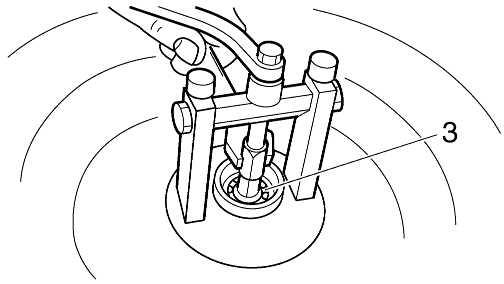

▲▲▲▲▲▲▲▲▲▲▲▲▲▲▲▲▲▲▲▲▲▲▲▲▲▲▲▲▲▲▲▲▲▲▲

EAS30147

CHECKING THE FRONT WHEEL

1. Check:
   - Wheel axle
     Roll the wheel axle on a flat surface.
     Bends → Replace.

EWA13460

WARNING

Do not attempt to straighten a bent wheel axle.

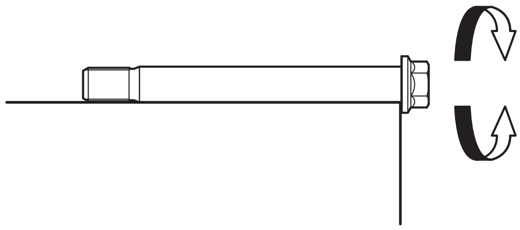

2. Check:
   - Tire
   - Front wheel
     Damage/wear → Replace.
     Refer to "CHECKING THE TIRES" on page 3-15 and "CHECKING THE WHEELS" on page 3-15.
3. Measure:
   - Radial wheel runout "1"

- Lateral wheel runout “2”
  Over the specified limits Replace.

Radial wheel runout limit 1.0 mm (0.04 in) Lateral wheel runout limit 0.5 mm (0.02 in)

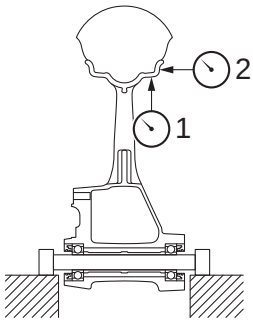

4. Check:
   - Wheel bearings
     Front wheel turns roughly or is loose Replace the wheel bearings.
   - Oil seals
     Damage/wear Replace.

EAS31151

MAINTENANCE OF THE FRONT WHEEL SENSOR AND SENSOR ROTOR

ECA21070

NOTICE

- Handle the ABS components with care since they have been accurately adjusted. Keep them away from dirt and do not subject them to shocks.
- The front wheel sensor cannot be disassembled. Do not attempt to disassemble it. If faulty, replace with a new one.
- Keep any type of magnets (including magnetic pick-up tools, magnetic screwdrivers, etc.) away from the front wheel sensor or front wheel sensor rotor.
- Do not drop or shock the wheel sensor or the wheel sensor rotor.

1. Check:
   - Front wheel sensor “1”
     Cracks/bends/distortion Replace.
     Iron powder/dust Clean.

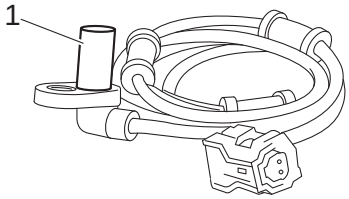

2. Check:
   - Front wheel sensor rotor “1”
     Cracks/damage/scratches Replace the front wheel sensor rotor.
     Iron powder/dust/solvent Clean.

TIP

- The wheel sensor rotor is installed on the inner side of the wheel hub.
- When cleaning the wheel sensor rotor, be careful not to damage the surface of the sensor rotor.

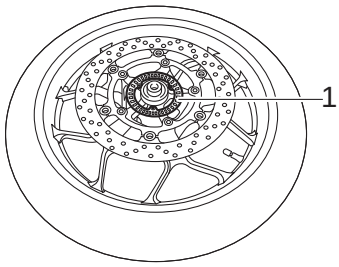

3. Measure:
   - Wheel sensor rotor deflection
     Out of specification Clean the installation surface of the wheel sensor rotor and correct the wheel sensor rotor deflection, or replace the wheel sensor rotor.

Wheel sensor rotor deflection limit 0.25 mm (0.0098 in)

a. Hold the dial gauge at a right angle against the wheel sensor rotor surface.
b. Measure the wheel sensor rotor deflection.

Disassembling the rear wheel

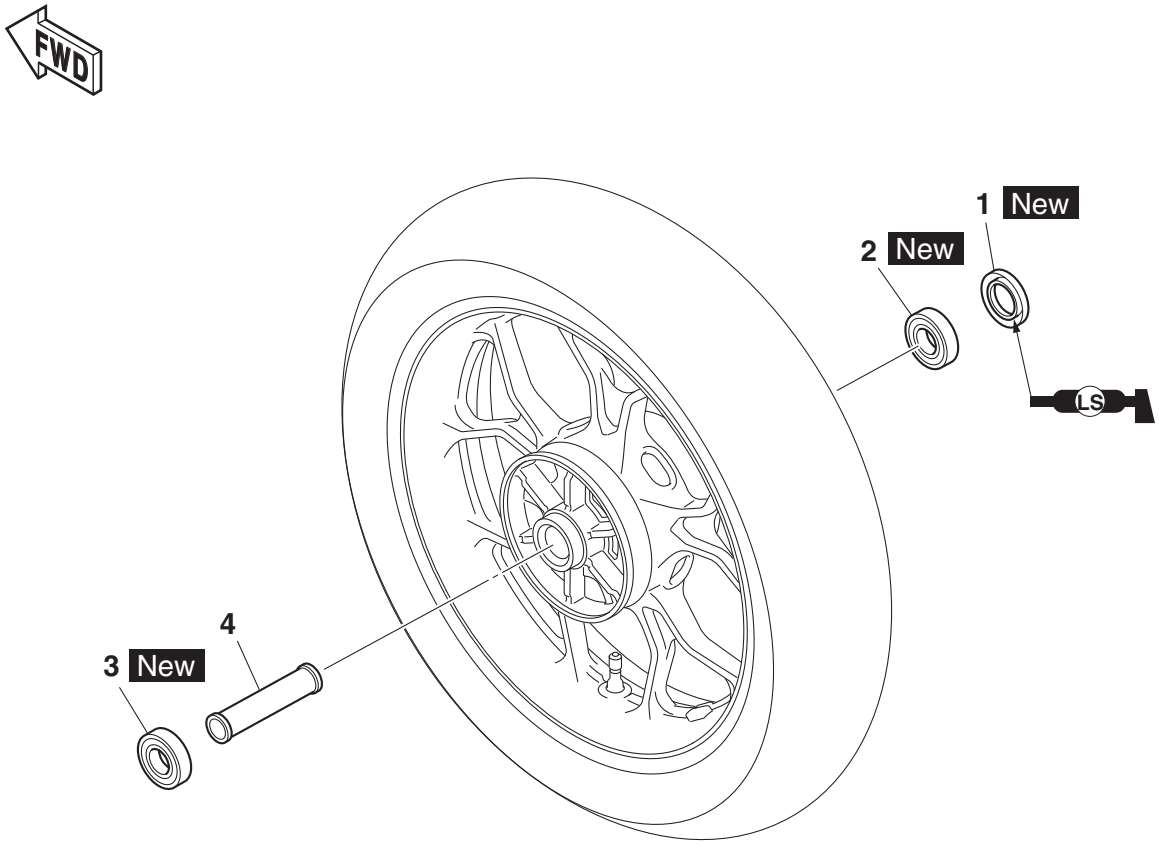

Order	Job/Parts to remove	Q'ty	Remarks
1	Oil seal	1	
2	Wheel bearing (right)	1	
3	Wheel bearing (left)	1	
4	Spacer	1	

EAS30156
REMOVING THE REAR WHEEL

ECA21030
NOTICE

- **Keep any type of magnets (including magnetic pick-up tools, magnetic screwdrivers, etc.) away from the rear wheel sensor or rear wheel sensor rotor; otherwise, the sensor or rotor may be damaged, resulting in improper performance of the ABS system.**
- **Do not drop the rear wheel sensor rotor or subject it to shocks.**
- **If any solvent gets on the rear wheel sensor rotor, wipe it off immediately.**

1. Stand the vehicle on a level surface.

EWA13120
WARNING

Securely support the vehicle so that there is no danger of it falling over.

TIP

Place the vehicle on a suitable stand so that the rear wheel is elevated.

2. Remove:
   - Rear brake caliper

ECA21040
NOTICE

- **Do not depress the brake pedal when removing the brake caliper.**
- **Be sure not to contact the sensor electrode to any metal part when removing the rear wheel sensor from the rear brake caliper bracket.**

3. Loosen:
   - Drive chain puller locknuts “1”
   - Drive chain adjusting nuts “2”

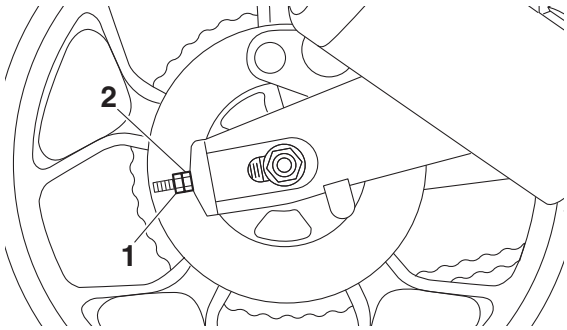

4. Remove:
   - Rear wheel axle nut “1”
   - Washers
   - Rear wheel axle “2”
   - Rear wheel

TIP

Push the rear wheel forward and remove the drive chain from the rear wheel sprocket.

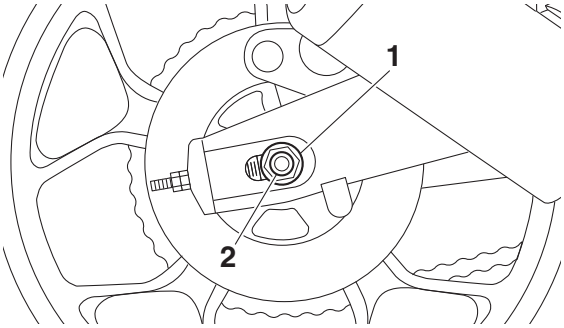

EAS30158
DISASSEMBLING THE REAR WHEEL

1. Remove:
   - Oil seal
   - Wheel bearings
     Refer to “DISASSEMBLING THE FRONT WHEEL” on page 4-20.

EAS30159
CHECKING THE REAR WHEEL

1. Check:
   - Rear wheel axle
   - Wheel bearings
   - Oil seal
     Refer to “CHECKING THE FRONT WHEEL” on page 4-20.
2. Check:
   - Tire
   - Rear wheel
     Damage/wear → Replace.
     Refer to “CHECKING THE TIRES” on page 3-15 and “CHECKING THE WHEELS” on page 3-15.
3. Measure:
   - Radial wheel runout
   - Lateral wheel runout
     Refer to “CHECKING THE FRONT WHEEL” on page 4-20.

EAS30160
CHECKING THE REAR WHEEL DRIVE HUB

1. Check:
   - Rear wheel drive hub “1”
     Cracks/damage → Replace.
   - Rear wheel drive hub dampers “2”
     Damage/wear → Replace.

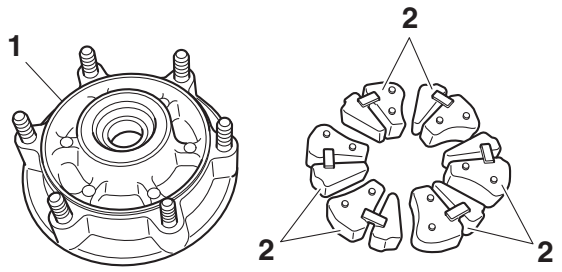

EAS30161

CHECKING AND REPLACING THE REAR WHEEL SPROCKET

1. Check:
   - Rear wheel sprocket
     More than 1/4 tooth “a” wear → Replace the drive chain sprockets as a set.
     Bent teeth → Replace the drive chain sprockets as a set.

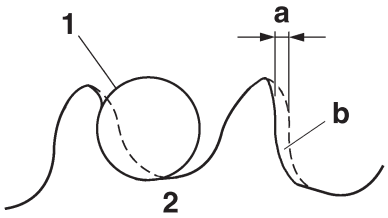

b. Correct
1. Drive chain roller
2. Rear wheel sprocket

2. Replace:
   - Rear wheel sprocket “1”

▼▼▼▼▼▼▼▼▼▼▼▼▼▼▼▼▼▼▼▼▼▼▼▼▼▼▼▼▼▼▼▼▼▼

a. Remove the rear wheel sprocket nuts, plates, rear wheel sprocket brackets, and the rear wheel sprocket.
b. Clean the rear wheel drive hub with a clean cloth, especially the surfaces that contact the sprocket.
c. Install a new rear wheel sprocket.

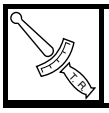	**Rear wheel sprocket nut** **68 Nm (6.8 m·kgf, 49 ft·lbf)**

TIP

- Install the rear wheel sprocket with its stamped mark “a” facing outward.
- Tighten the rear wheel sprocket nuts in stages and in a crisscross pattern.

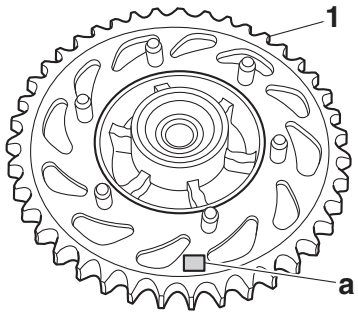

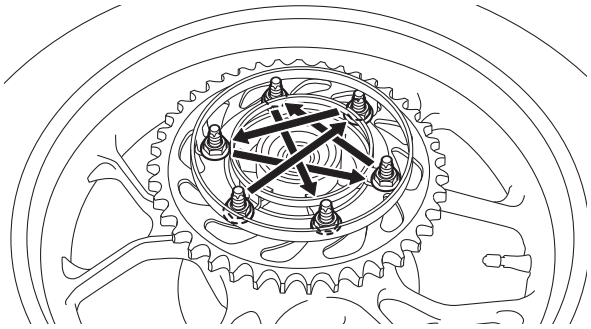

▲▲▲▲▲▲▲▲▲▲▲▲▲▲▲▲▲▲▲▲▲▲▲▲▲▲▲▲▲▲▲▲▲▲

EAS30167

MAINTENANCE OF THE REAR WHEEL SENSOR AND SENSOR ROTOR

ECA21060

NOTICE

- **Handle the ABS components with care since they have been accurately adjusted. Keep them away from dirt and do not subject them to shocks.**
- **The rear wheel sensor cannot be disassembled. Do not attempt to disassemble it. If faulty, replace with a new one.**
- **Keep any type of magnets (including magnetic pick-up tools, magnetic screwdrivers, etc.) away from the rear wheel sensor or rear wheel sensor rotor.**
- **Do not drop or shock the wheel sensor or the wheel sensor rotor.**

1. Check:
   - Rear wheel sensor
     Refer to “MAINTENANCE OF THE FRONT WHEEL SENSOR AND SENSOR ROTOR” on page 4-21.
2. Check:
   - Rear wheel sensor rotor
     Refer to “MAINTENANCE OF THE FRONT WHEEL SENSOR AND SENSOR ROTOR” on page 4-21.

3. Measure:
   - Wheel sensor rotor deflection
     Refer to “MAINTENANCE OF THE FRONT WHEEL SENSOR AND SENSOR ROTOR” on page 4-21.

Wheel sensor rotor deflection limit
0.25 mm (0.0098 in)

EAS30163
ASSEMBLING THE REAR WHEEL

1. Install:
   - Wheel bearings New
   - Oil seal New

▼▼▼▼▼▼▼▼▼▼▼▼▼▼▼▼▼▼▼▼▼▼▼▼▼▼▼▼▼▼▼▼▼▼

a. Install the new wheel bearing (right side).

ECA18110
NOTICE

Do not contact the wheel bearing inner race “1” or balls “2”. Contact should be made only with the outer race “3”.

TIP

Use a socket “4” that matches the diameter of the wheel bearing outer race.

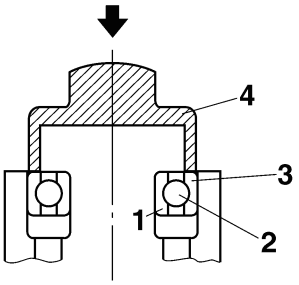

b. Install the spacer.
c. Install the new wheel bearing (left side).

TIP

Place a suitable washer “1” between the socket “2” and the bearing so that both the inner race “3” and outer race “4” are pressed at the same time, and then press the bearing until the inner race makes contact with the spacer “5”.

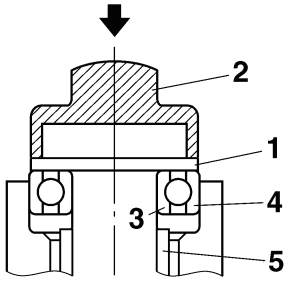

▲▲▲▲▲▲▲▲▲▲▲▲▲▲▲▲▲▲▲▲▲▲▲▲▲▲▲▲▲▲▲▲▲▲

EAS30164
ADJUSTING THE REAR WHEEL STATIC BALANCE

TIP

- After replacing the tire, wheel or both, the rear wheel static balance should be adjusted.
- Adjust the rear wheel static balance with the brake disc and rear wheel drive hub installed.

1. Adjust:
   - Rear wheel static balance
     Refer to “ADJUSTING THE FRONT WHEEL STATIC BALANCE” on page 4-22.

EAS30165
INSTALLING THE REAR WHEEL (REAR BRAKE DISC)

1. Install:
   - Rear brake disc “1”
   - Rear wheel sensor

Rear brake disc bolt
23 Nm (2.3 m·kgf, 17 ft·lbf)
LOCTITE®
Rear wheel sensor rotor bolt
8 Nm (0.8 m·kgf, 5.8 ft·lbf)
LOCTITE®

TIP

Install the rear brake disc with its chamfered side “a” facing inward.

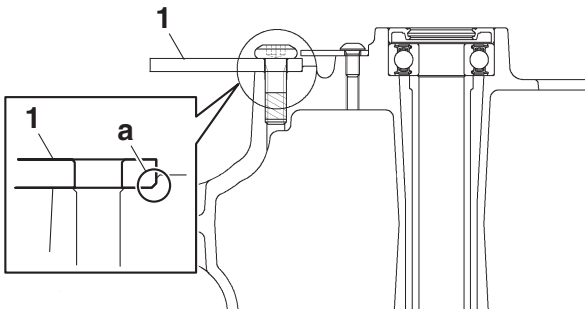

ECA21011

NOTICE

- **Do not drop the wheel sensor rotor or subject it to shocks.**
- **If any solvent gets on the wheel sensor rotor, wipe it off immediately.**
- **Replace the brake disc bolts and wheel sensor rotor bolts with new ones.**

TIP

- Install the wheel sensor rotor with the stamped mark “a” facing outward.
- Tighten the brake disc bolts in stages and in a crisscross pattern.

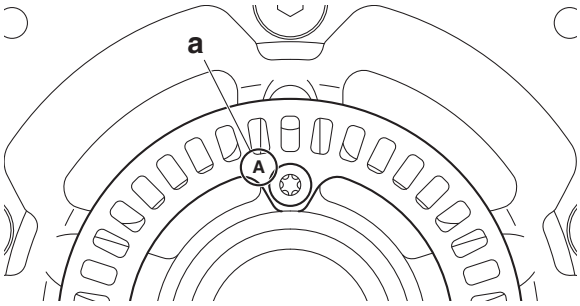

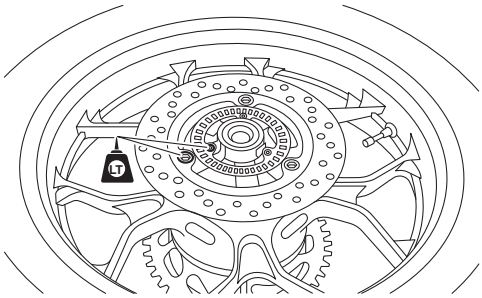

2. Install:
   - Rear wheel sprocket
     Refer to “CHECKING AND REPLACING THE REAR WHEEL SPROCKET” on page 4-31.
3. Check:
   - Rear brake disc
     Refer to “CHECKING THE REAR BRAKE DISC” on page 4-53.
4. Lubricate:
   - Oil seal lips

	Recommended lubricant **Lithium-soap-based grease**

5. Install:
   - Collar (right)
   - Collar (left)
   - Chain pullers
   - Brake caliper bracket “1”
   - Rear wheel
   - Rear wheel axle
   - Washers
   - Rear wheel axle nut
   - Swingarm end plates

TIP

- Install the rear wheel with the mark “a” on the rear tire pointing in the direction of wheel rotation.
- Align the projection “b” in the swingarm with the slot “c” of the brake caliper bracket.
- Apply lithium-soap-based grease to the contact surface and threads of the rear wheel axle nut.

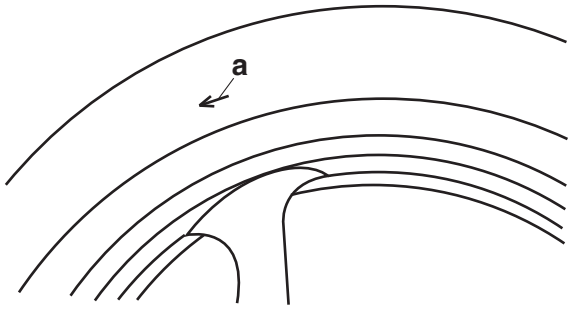

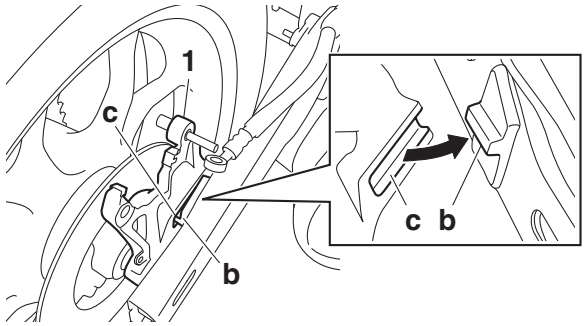

6. Lubricate:
   - Rear brake caliper bolt

	Recommended lubricant **Silicone grease**

7. Install:
   - Rear brake caliper
   - Rear brake caliper bolt
8. Adjust:
   - Drive chain slack
     Refer to “ADJUSTING THE DRIVE CHAIN SLACK” on page 3-17.

Drive chain slack
35.0–45.0 mm (1.38–1.77 in)
Drive chain slack (fully extension of rear suspension)
40.0–50.0 mm (1.57–1.97 in)

9. Tighten:
   - Rear wheel axle nut
   - Rear brake caliper bolt

Rear wheel axle nut
57 Nm (5.7 m·kgf, 41 ft·lbf)
Rear brake caliper bolt
31 Nm (3.1 m·kgf, 22 ft·lbf)

EWA13500

WARNING

Make sure the brake hose is routed properly.

10. Install:
   - Rear wheel sensor

Rear wheel sensor bolt
7 Nm (0.7 m·kgf, 5.1 ft·lbf)
LOCTITE®

ECA21080

NOTICE

Make sure there are no foreign materials in the rear wheel sensor rotor and rear wheel sensor. Foreign materials cause damage to the rear wheel sensor rotor and rear wheel sensor.

TIP

To route the rear wheel sensor lead, refer to “CABLE ROUTING” on page 2-43.

11. Measure:
   - Distance “a”
     (between the rear wheel sensor rotor “1” and rear wheel sensor “2”)
     Out of specification → Check the wheel bearing for looseness, and the rear wheel sensor and sensor rotor installation conditions (warpage caused by overtorque, wrong installation direction, rotor decentering, LOCTITE® on the mounting surface of the rotor, deformation caused by an impact during service and caught foreign materials). If there is any defective part, repair or replace the defective part.

Distance “a” (between the rear wheel sensor rotor and rear wheel sensor)
0.81–1.57 mm (0.032–0.062 in)

TIP

Measure the distance between the rear wheel sensor rotor and rear wheel sensor in several places in one rotation of the rear wheel. Do not turn the rear wheel while the thickness gauge is installed. This may damage the rear wheel sensor rotor and the rear wheel sensor.

Thickness gauge
90890-03180
Feeler gauge set
YU-26900-9

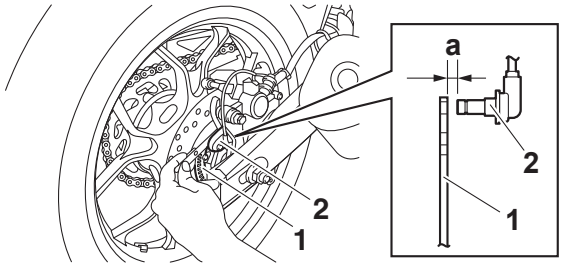

EAS20030

FRONT BRAKE

Removing the front brake pads

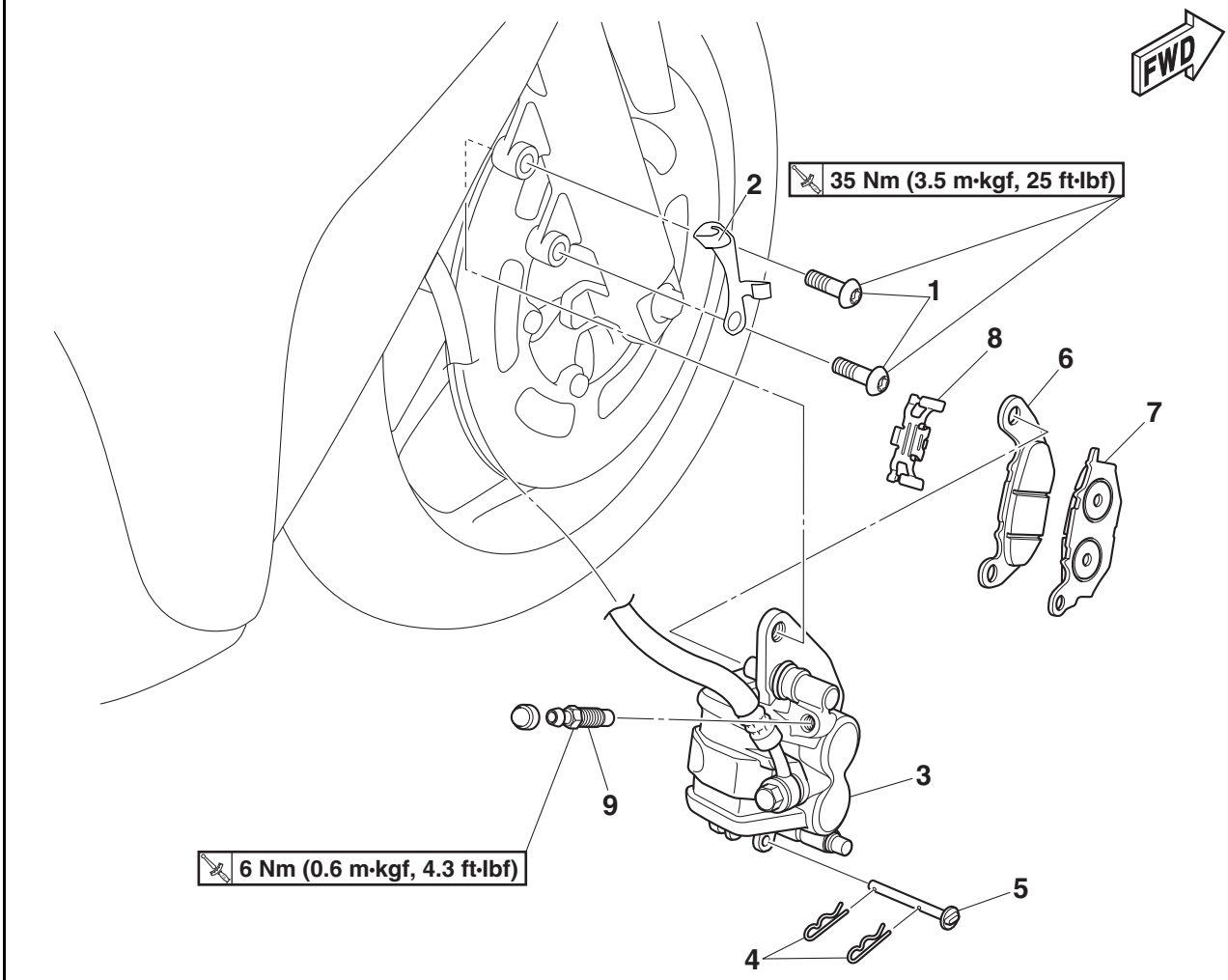

Order	Job/Parts to remove	Q'ty	Remarks
1	Front brake caliper bolt	2	
2	Front wheel sensor lead holder	1	
3	Front brake caliper	1	
4	Brake pad clip	2	
5	Brake pad pin	1	
6	Brake pad (inner)	1	
7	Brake pad (outer)	1	
8	Brake pad spring	1	
9	Brake caliper bleed screw	1	

Removing the front brake master cylinder

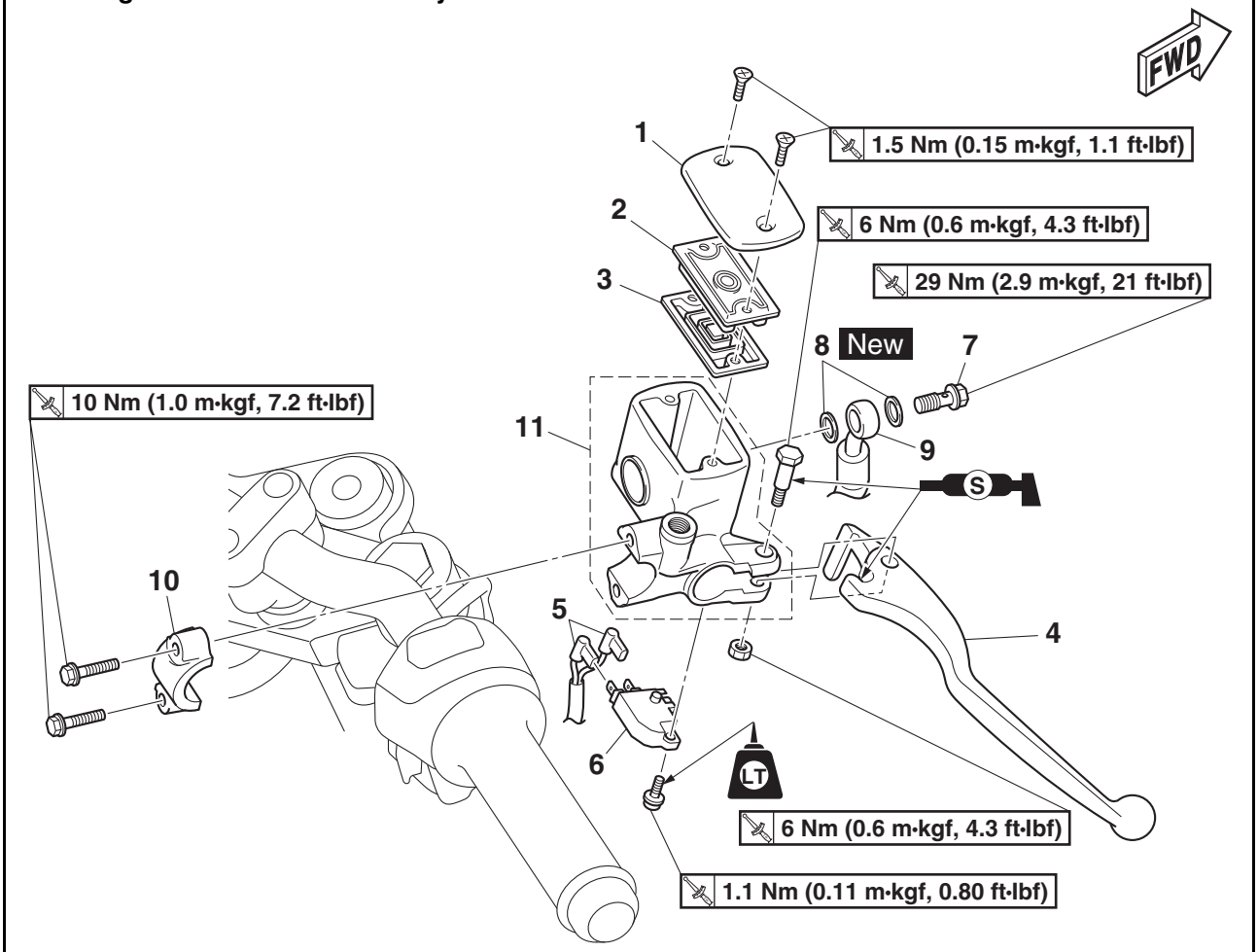

Order	Job/Parts to remove	Q'ty	Remarks
	Rearview mirror (right)		Refer to "HANDLEBAR" on page 4-69.
	Brake fluid		Drain. Refer to "BLEEDING THE HYDRAULIC BRAKE SYSTEM (ABS)" on page 3-14.
1	Front brake master cylinder reservoir cap	1	
2	Brake master cylinder reservoir diaphragm holder	1	
3	Brake master cylinder reservoir diaphragm	1	
4	Brake lever	1	
5	Front brake light switch connector	2	Disconnect.
6	Front brake light switch	1	
7	Front brake hose union bolt (master cylinder side)	1	
8	Brake hose gasket	2	
9	Front brake hose (brake master cylinder to brake hose joint)	1	
10	Front brake master cylinder holder	1	
11	Front brake master cylinder assembly	1	

Disassembling the front brake master cylinder

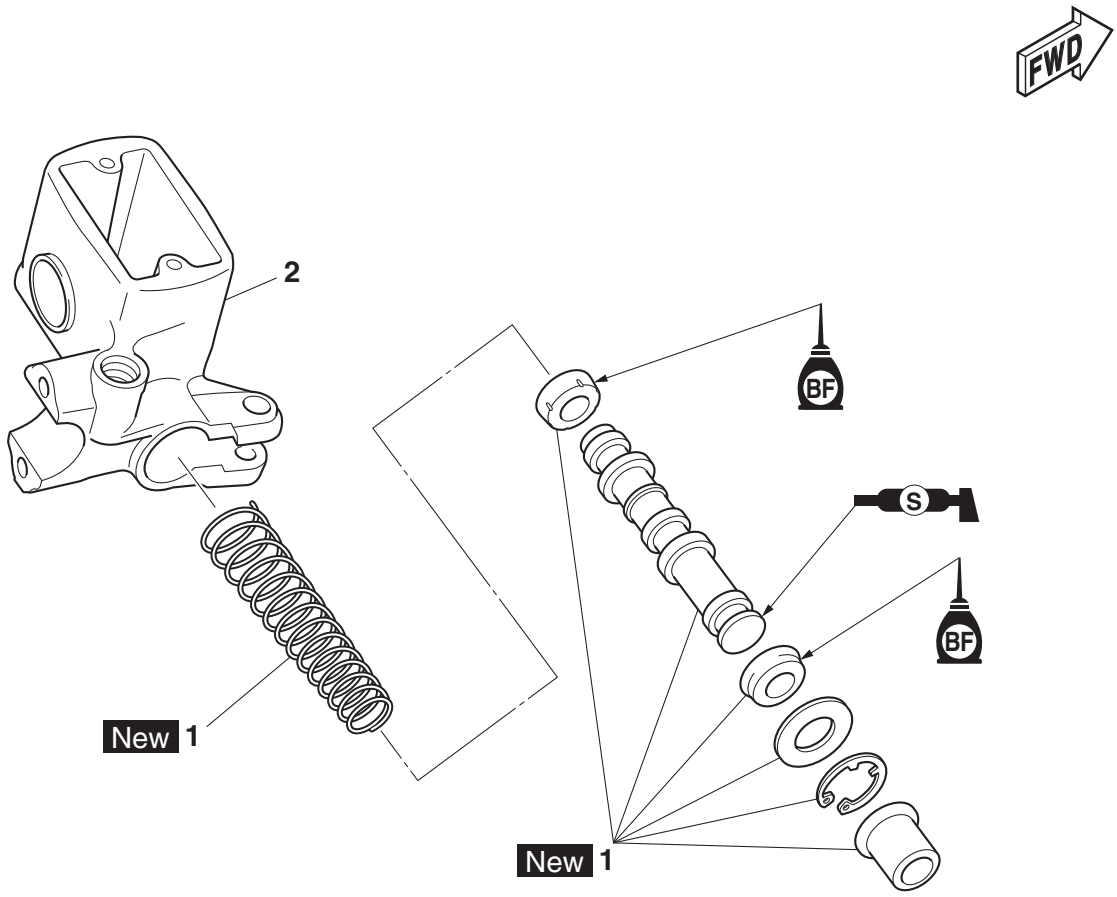

Order	Job/Parts to remove	Q'ty	Remarks
1	Brake master cylinder kit	1	
2	Brake master cylinder body	1	

Removing the front brake caliper

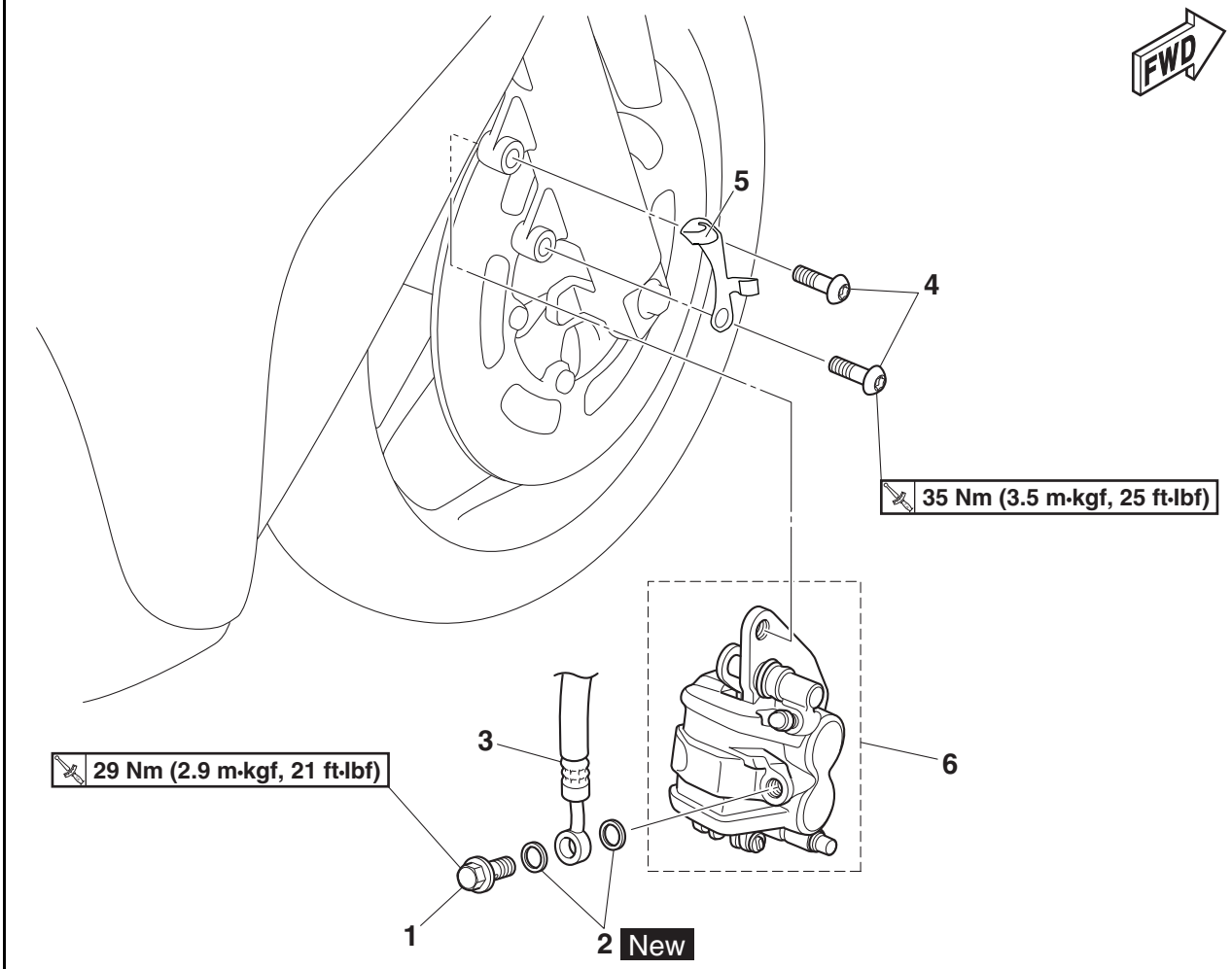

Order	Job/Parts to remove	Q'ty	Remarks
	Brake fluid		Drain. Refer to "BLEEDING THE HYDRAULIC BRAKE SYSTEM (ABS)" on page 3-14.
1	Front brake hose union bolt (brake caliper side)	1	
2	Brake hose gasket	2	
3	Brake hose (brake hose joint to front brake caliper)	1	
4	Front brake caliper bolt	2	
5	Sensor lead holder	1	
6	Front brake caliper	1	

Disassembling the front brake caliper

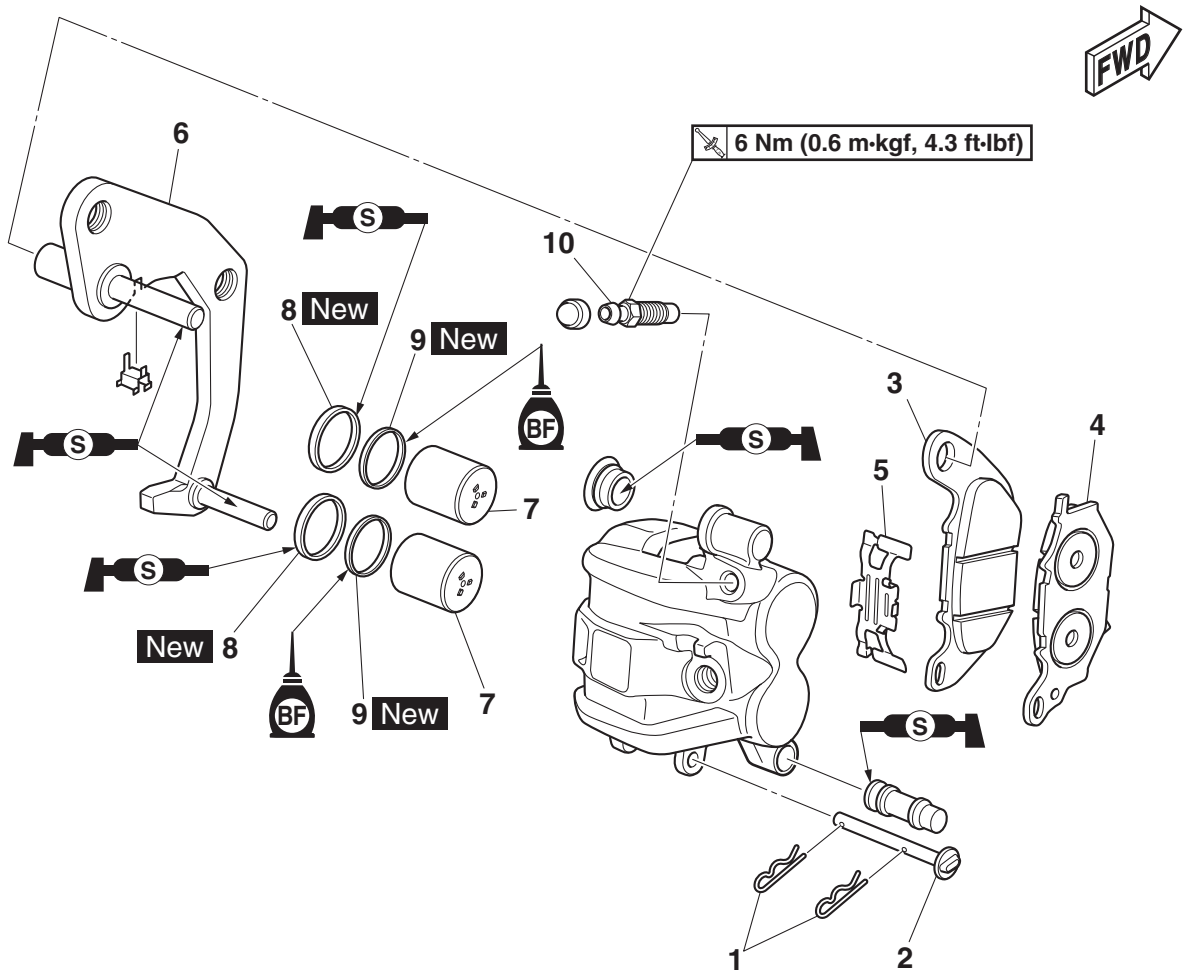

Order	Job/Parts to remove	Q'ty	Remarks
1	Brake pad clip	2	
2	Brake pad pin	1	
3	Brake pad (inner)	1	
4	Brake pad (outer)	1	
5	Brake pad spring	1	
6	Front brake caliper bracket	1	
7	Brake caliper piston	2	
8	Brake caliper piston dust seal	2	
9	Brake caliper piston seal	2	
10	Brake caliper bleed screw	1	

EAS30168

INTRODUCTION

EWA14101

WARNING

Disc brake components rarely require disassembly. Therefore, always follow these preventive measures:

- **Never disassemble brake components unless absolutely necessary.**
- **If any connection on the hydraulic brake system is disconnected, the entire brake system must be disassembled, drained, cleaned, properly filled, and bled after reassembly.**
- **Never use solvents on internal brake components.**
- **Use only clean or new brake fluid for cleaning brake components.**
- **Brake fluid may damage painted surfaces and plastic parts. Therefore, always clean up any spilt brake fluid immediately.**
- **Avoid brake fluid coming into contact with the eyes as it can cause serious injury.**

FIRST AID FOR BRAKE FLUID ENTERING THE EYES:

- **Flush with water for 15 minutes and get immediate medical attention.**

EAS30169

CHECKING THE FRONT BRAKE DISC

1. Remove:
   - Front wheel
     Refer to “FRONT WHEEL” on page 4-18.
2. Check:
   - Front brake disc
     Damage/galling → Replace.
3. Measure:
   - Brake disc deflection
     Out of specification → Correct the brake disc deflection or replace the brake disc.

Brake disc runout limit (as measured on wheel)
0.15 mm (0.0059 in)

▼▼▼▼▼▼▼▼▼▼▼▼▼▼▼▼▼▼▼▼▼▼▼▼▼▼▼▼▼▼▼▼▼▼

a. Place the vehicle on a suitable stand so that the front wheel is elevated.
b. Before measuring the brake disc deflection, turn the handlebar to the left or right to ensure that the front wheel is stationary.
c. Remove the brake caliper.
d. Hold the dial gauge at a right angle against the brake disc surface.
e. Measure the deflection 1.5 mm (0.06 in) below the edge of the brake disc.

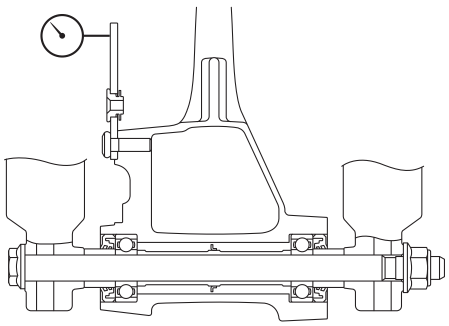

▲▲▲▲▲▲▲▲▲▲▲▲▲▲▲▲▲▲▲▲▲▲▲▲▲▲▲▲▲▲▲▲▲▲

4. Measure:
   - Brake disc thickness
     Measure the brake disc thickness at a few different locations.
     Out of specification → Replace.

Brake disc thickness limit
4.0 mm (0.16 in)

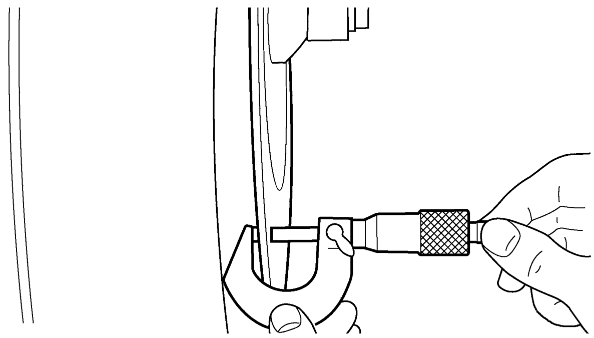

5. Adjust:
   - Brake disc deflection

▼▼▼▼▼▼▼▼▼▼▼▼▼▼▼▼▼▼▼▼▼▼▼▼▼▼▼▼▼▼▼▼▼▼

a. Remove the brake disc.
b. Rotate the brake disc by one bolt hole.
c. Install the brake disc.

Front brake disc bolt
23 Nm (2.3 m·kgf, 17 ft·lbf)
LOCTITE®

ECA19150

NOTICE

Replace the brake disc bolts with new ones.

TIP

- Install the front brake disc “1” with its chamfered side “a” facing inward.
- Tighten the brake disc bolts in stages and in a crisscross pattern.

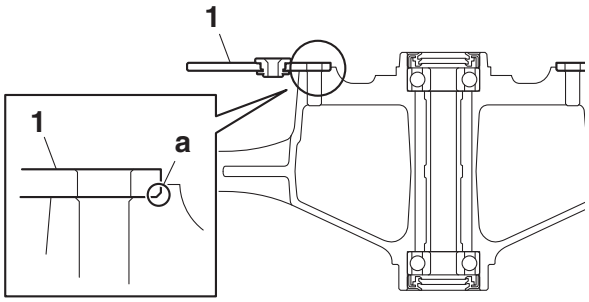

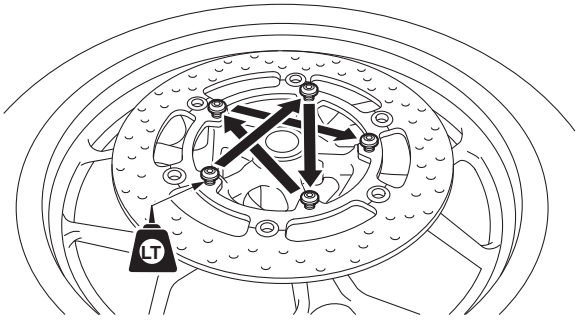

d. Measure the brake disc deflection.
e. If out of specification, repeat the adjustment steps until the brake disc deflection is within specification.
f. If the brake disc deflection cannot be brought within specification, replace the brake disc.

▲▲▲▲▲▲▲▲▲▲▲▲▲▲▲▲▲▲▲▲▲▲▲▲▲▲▲▲▲▲▲▲▲▲

6. Install:
   - Front wheel
     Refer to “FRONT WHEEL” on page 4-18.

EAS30170

REPLACING THE FRONT BRAKE PADS

TIP

When replacing the brake pads, it is not necessary to disconnect the brake hose or disassemble the brake caliper.

1. Measure:
   - Brake pad wear limit “a”
     Out of specification → Replace the brake pads as a set.

Brake pad lining thickness (inner)
5.3 mm (0.21 in)
Limit
0.8 mm (0.03 in)
Brake pad lining thickness (outer)
5.3 mm (0.21 in)
Limit
0.8 mm (0.03 in)

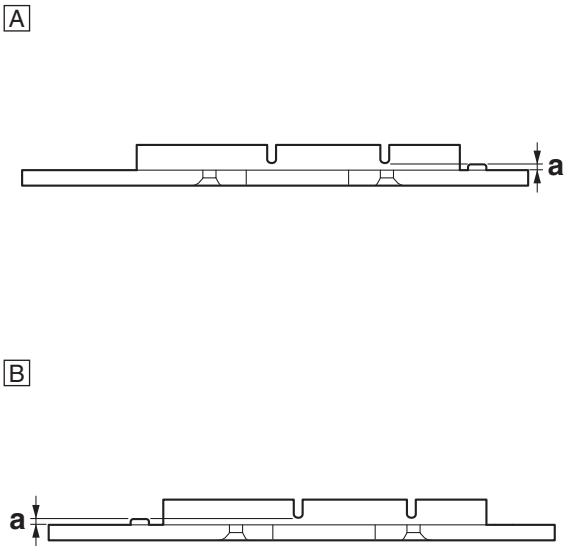

A. Inner
B. Outer

2. Install:
   - Brake pad spring
   - Brake pads

TIP

Always install new brake pads and new brake pad spring as a set.

▼▼▼▼▼▼▼▼▼▼▼▼▼▼▼▼▼▼▼▼▼▼▼▼▼▼▼▼▼▼▼▼▼▼

a. Connect a clear plastic hose “1” tightly to the bleed screw “2”. Put the other end of the hose into an open container.
b. Loosen the bleed screw and push the brake caliper pistons into the brake caliper with your finger.

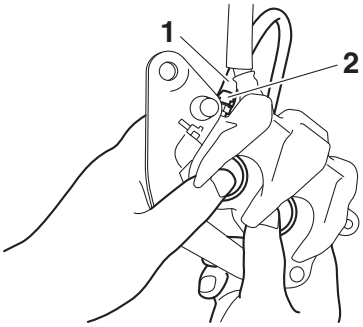

c. Tighten the bleed screw.

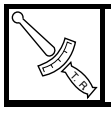

Brake caliper bleed screw
6 Nm (0.6 m·kgf, 4.3 ft·lbf)

d. Install a new brake pad spring and new brake pads.

▲▲▲▲▲▲▲▲▲▲▲▲▲▲▲▲▲▲▲▲▲▲▲▲▲▲▲▲▲▲▲▲

3. Install:
   - Brake pad pin
   - Brake pad clips
   - Front brake caliper

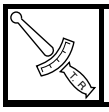	**Front brake caliper bolt** **35 Nm (3.5 m·kgf, 25 ft·lbf)**

4. Check:
   - Brake fluid level
     Below the minimum level mark "a" → Add the specified brake fluid to the proper level.
     Refer to "CHECKING THE BRAKE FLUID LEVEL" on page 3-15.

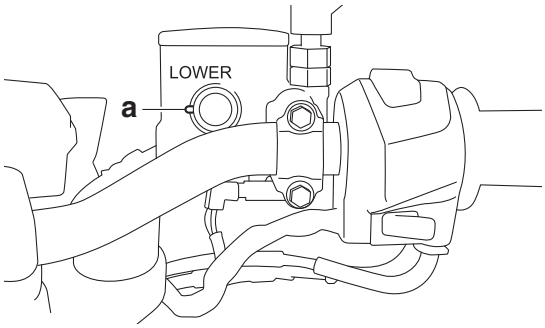

5. Check:
   - Brake lever operation
     Soft or spongy feeling → Bleed the brake system.
     Refer to "BLEEDING THE HYDRAULIC BRAKE SYSTEM (ABS)" on page 3-14.

EAS30724

REMOVING THE FRONT BRAKE CALIPER

TIP

Before removing the brake caliper, drain the brake fluid from the entire brake system.

1. Remove:
   - Brake hose union bolt "1"
   - Brake hose gaskets "2"
   - Brake hose "3"

TIP

Put the end of the brake hose into a container and pump out the brake fluid carefully.

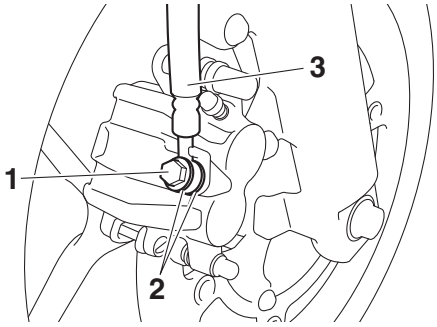

EAS30172

DISASSEMBLING THE FRONT BRAKE CALIPER

1. Remove:
   - Brake caliper pistons "1"
   - Brake caliper piston dust seals "2"
   - Brake caliper piston seals "3"

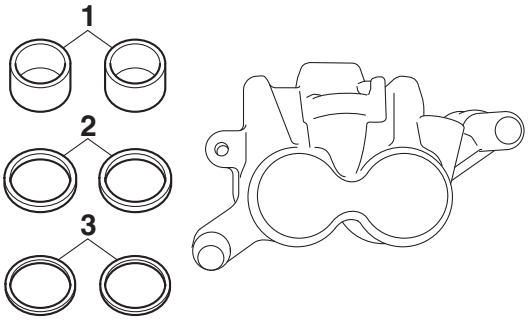

▼▼▼▼▼▼▼▼▼▼▼▼▼▼▼▼▼▼▼▼▼▼▼▼▼▼▼▼▼▼▼▼

a. Blow compressed air into the brake hose joint opening "a" to force out the pistons from the brake caliper.

EWA13550

WARNING

- **Cover the brake caliper piston with a rag. Be careful not to get injured when the piston is expelled from the brake caliper.**
- **Never try to pry out the brake caliper piston.**

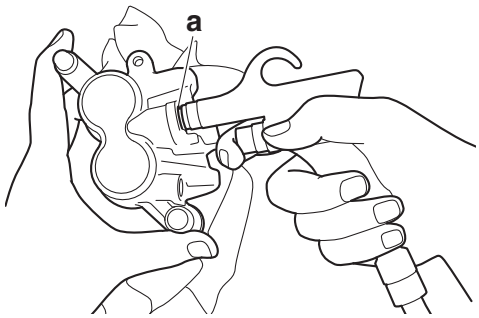

b. Remove the brake caliper piston dust seals and brake caliper piston seals.

▲▲▲▲▲▲▲▲▲▲▲▲▲▲▲▲▲▲▲▲▲▲▲▲▲▲▲▲▲▲▲▲

EAS30173
CHECKING THE FRONT BRAKE CALIPER

Recommended brake component replacement schedule	
Brake pads	If necessary
Piston seals	Every two years
Piston dust seals	Every two years
Brake hose	Every four years
Brake fluid	Every two years and whenever the brake is disassembled

1. Check:
   - Brake caliper pistons “1”
     Rust/scratches/wear → Replace the brake caliper pistons.
   - Brake caliper cylinders “2”
     Scratches/wear → Replace the brake caliper assembly.
   - Brake caliper body “3”
     Cracks/damage → Replace the brake caliper assembly.
   - Brake fluid delivery passages (brake caliper body)
     Obstruction → Blow out with compressed air.

EWA13611
WARNING

Whenever a brake caliper is disassembled, replace the brake caliper piston dust seals and brake caliper piston seals.

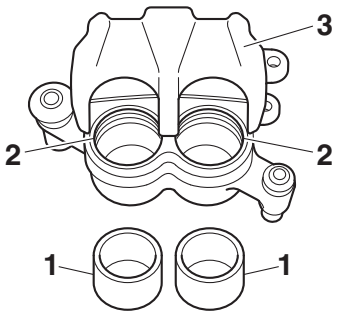

EAS30174
ASSEMBLING THE FRONT BRAKE CALIPER

EWA13621
WARNING

- **Before installation, all internal brake components should be cleaned and lubricated with clean or new brake fluid.**
- **Never use solvents on internal brake components as they will cause the brake caliper piston dust seals and brake caliper piston seals to swell and distort.**
- **Whenever a brake caliper is disassembled, replace the brake caliper piston dust seals and brake caliper piston seals.**

Specified brake fluid
DOT 4

EAS30934
INSTALLING THE FRONT BRAKE CALIPER

1. Install:
   - Front brake caliper “1” (temporarily)
   - Brake hose gaskets “2” New
   - Brake hose “3”
   - Brake hose union bolt “4”

Front brake hose union bolt (brake caliper side)
29 Nm (2.9 m·kgf, 21 ft·lbf)

EWA13531
WARNING

Proper brake hose routing is essential to insure safe vehicle operation.

ECA18220
NOTICE

When installing the brake hose onto the brake caliper, make sure the brake pipe “a” touches the projection “b” on the brake caliper.

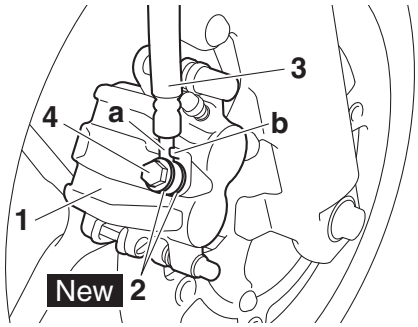

2. Remove:
   - Front brake caliper
3. Install:
   - Brake pad spring
   - Brake pads
   - Brake pad pin
   - Brake pad clips

Front brake caliper bolt
35 Nm (3.5 m·kgf, 25 ft·lbf)

Refer to “REPLACING THE FRONT BRAKE PADS” on page 4-41.

4. Fill:
   - Brake master cylinder reservoir
     (with the specified amount of the specified brake fluid)

	Specified brake fluid **DOT 4**

EWA13090

WARNING

- **Use only the designated brake fluid. Other brake fluids may cause the rubber seals to deteriorate, causing leakage and poor brake performance.**
- **Refill with the same type of brake fluid that is already in the system. Mixing brake fluids may result in a harmful chemical reaction, leading to poor brake performance.**
- **When refilling, be careful that water does not enter the brake fluid reservoir. Water will significantly lower the boiling point of the brake fluid and could cause vapor lock.**

ECA13540

NOTICE

Brake fluid may damage painted surfaces and plastic parts. Therefore, always clean up any spilt brake fluid immediately.

5. Bleed:
   - Brake system
     Refer to “BLEEDING THE HYDRAULIC BRAKE SYSTEM (ABS)” on page 3-14.
6. Check:
   - Brake fluid level
     Below the minimum level mark “a” → Add the specified brake fluid to the proper level.
     Refer to “CHECKING THE BRAKE FLUID LEVEL” on page 3-15.

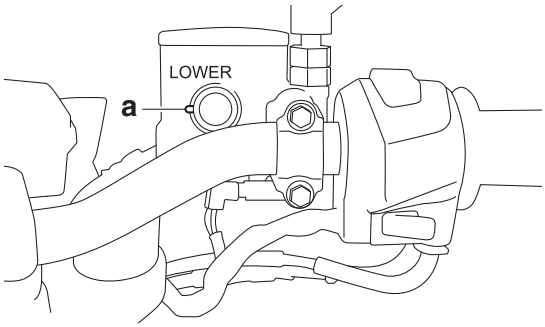

7. Check:
   - Brake lever operation
     Soft or spongy feeling → Bleed the brake system.
     Refer to “BLEEDING THE HYDRAULIC BRAKE SYSTEM (ABS)” on page 3-14.

EAS30179

REMOVING THE FRONT BRAKE MASTER CYLINDER

TIP

Before removing the front brake master cylinder, drain the brake fluid from the entire brake system.

1. Disconnect:
   - Front brake light switch connectors
     (from the front brake light switch)
2. Remove:
   - Front brake light switch
3. Remove:
   - Brake hose union bolt “1”
   - Brake hose gaskets “2”
   - Brake hose “3”

TIP

To collect any remaining brake fluid, place a container under the master cylinder and the end of the brake hose.

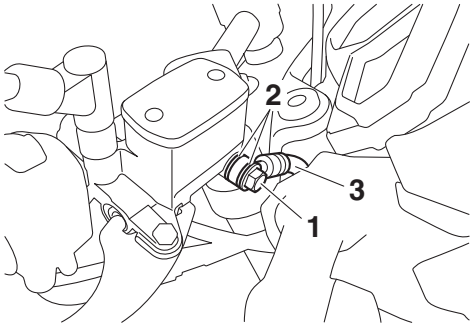

EAS30725

CHECKING THE FRONT BRAKE MASTER CYLINDER

1. Check:
   - Brake master cylinder
     Damage/scratches/wear → Replace.
   - Brake fluid delivery passages
     (brake master cylinder body)
     Obstruction → Blow out with compressed air.
2. Check:
   - Brake master cylinder kit
     Damage/scratches/wear → Replace.
3. Check:
   - Brake master cylinder reservoir “1”
   - Brake master cylinder reservoir diaphragm holder “2”
     Cracks/damage → Replace.
   - Brake master cylinder reservoir diaphragm “3”
     Damage/wear → Replace.

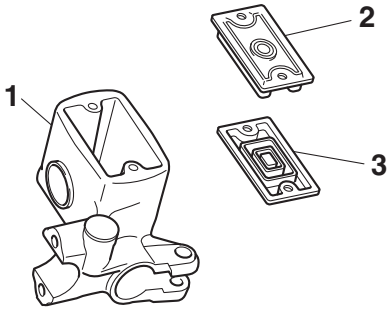

4. Check:
   - Brake hose
     Cracks/damage/wear → Replace.

EAS30181
ASSEMBLING THE FRONT BRAKE MASTER CYLINDER

EWA13520
WARNING

- **Before installation, all internal brake components should be cleaned and lubricated with clean or new brake fluid.**
- **Never use solvents on internal brake components.**

Specified brake fluid
DOT 4

EAS30182
INSTALLING THE FRONT BRAKE MASTER CYLINDER

1. Install:
   - Front brake master cylinder assembly
   - Front brake master cylinder holder

Front brake master cylinder holder bolt
10 Nm (1.0 m·kgf, 7.2 ft·lbf)

TIP

- Install the front brake master cylinder holder with the “UP” mark “a” facing up.
- Align the mating surfaces of the front brake master cylinder holder with the punch mark “b” on the handlebar.
- First, tighten the upper bolt, then the lower bolt.

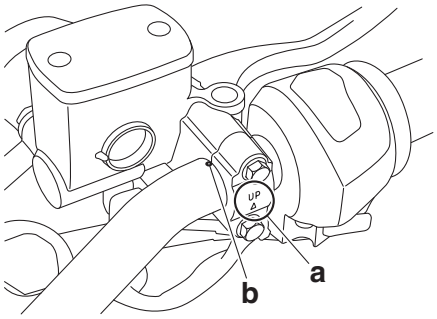

2. Install:
   - Brake hose
   - Brake hose gaskets New
   - Brake hose union bolt

Front brake hose union bolt (master cylinder side)
29 Nm (2.9 m·kgf, 21 ft·lbf)

EWA13531
WARNING

Proper brake hose routing is essential to insure safe vehicle operation.

TIP

- Attach the brake hose so that its angle is 19° to 25° against the straight line in parallel with the ceiling plane of the master cylinder.
- While holding the brake hose, tighten the union bolt as shown.
- Turn the handlebar to the left and right to make sure the brake hose does not touch other parts (e.g., wire harness, cables, leads). Correct if necessary.

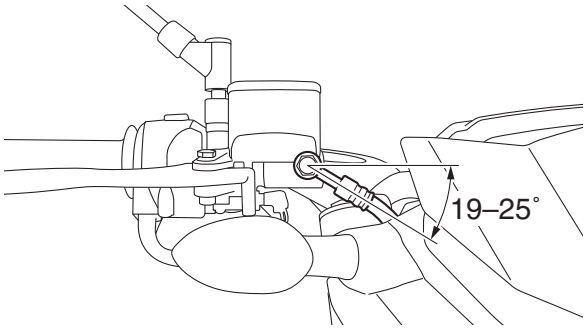

3. Fill:
   - Brake master cylinder reservoir
     (with the specified amount of the specified brake fluid)

Specified brake fluid
DOT 4

EWA13540

WARNING

- **Use only the designated brake fluid. Other brake fluids may cause the rubber seals to deteriorate, causing leakage and poor brake performance.**
- **Refill with the same type of brake fluid that is already in the system. Mixing brake fluids may result in a harmful chemical reaction, leading to poor brake performance.**
- **When refilling, be careful that water does not enter the brake master cylinder reservoir. Water will significantly lower the boiling point of the brake fluid and could cause vapor lock.**

ECA13540

NOTICE

Brake fluid may damage painted surfaces and plastic parts. Therefore, always clean up any spilt brake fluid immediately.

4. Bleed:
   - Brake system
     Refer to “BLEEDING THE HYDRAULIC BRAKE SYSTEM (ABS)” on page 3-14.
5. Check:
   - Brake fluid level
     Below the minimum level mark “a” → Add the specified brake fluid to the proper level.
     Refer to “CHECKING THE BRAKE FLUID LEVEL” on page 3-15.

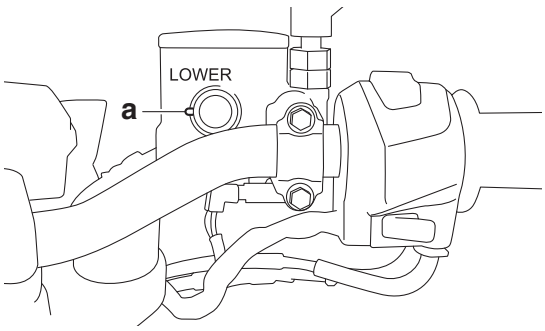

6. Check:
   - Brake lever operation
     Soft or spongy feeling → Bleed the brake system.
     Refer to “BLEEDING THE HYDRAULIC BRAKE SYSTEM (ABS)” on page 3-14.

EAS20031

REAR BRAKE

Removing the rear brake pads

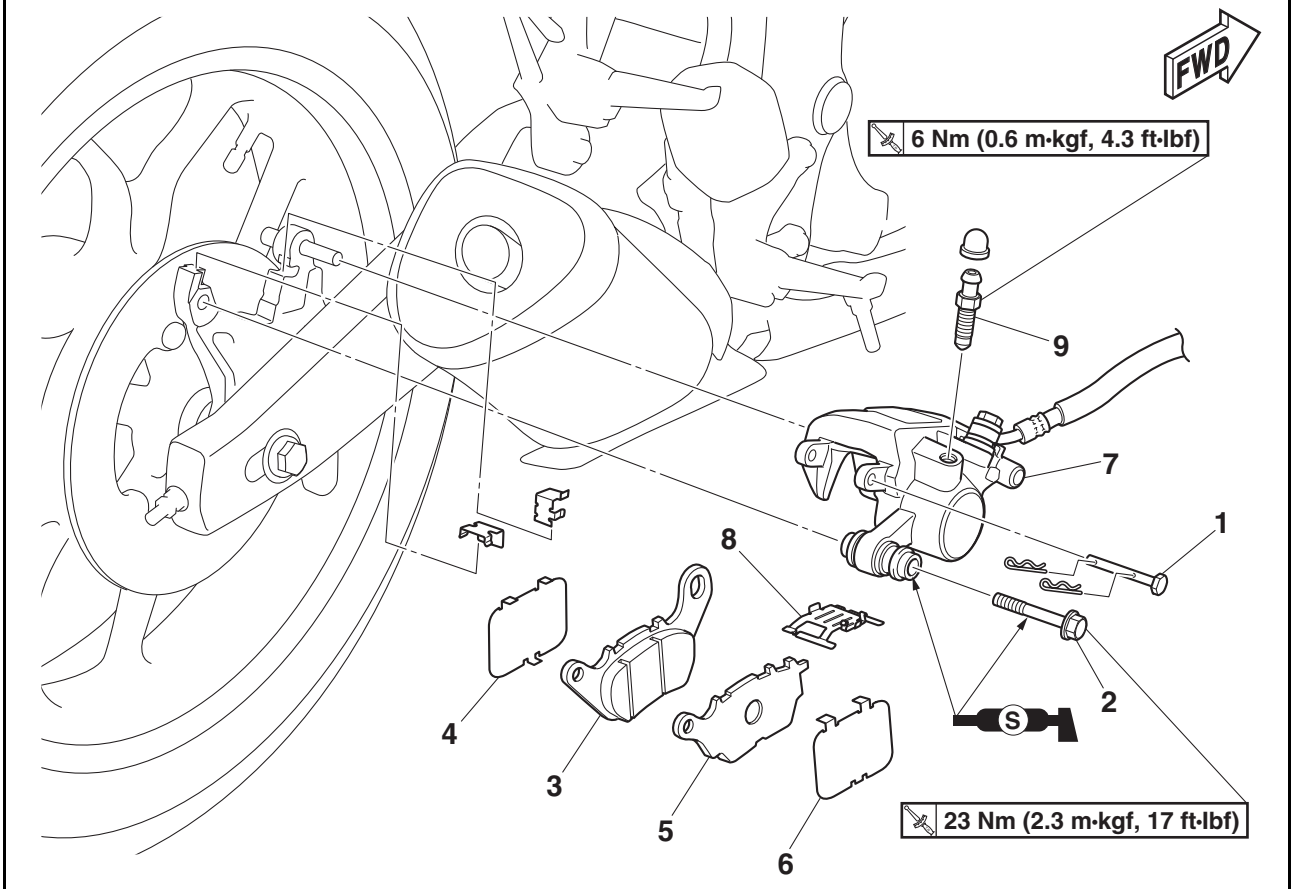

Order	Job/Parts to remove	Q'ty	Remarks
1	Brake pad pin	1	
2	Rear brake caliper bolt	1	
3	Brake pad (inner)	1	
4	Brake pad shim (inner)	1	
5	Brake pad (outer)	1	
6	Brake pad shim (outer)	1	
7	Rear brake caliper	1	
8	Brake pad spring	1	
9	Brake caliper bleed screw	1	

Removing the rear brake master cylinder

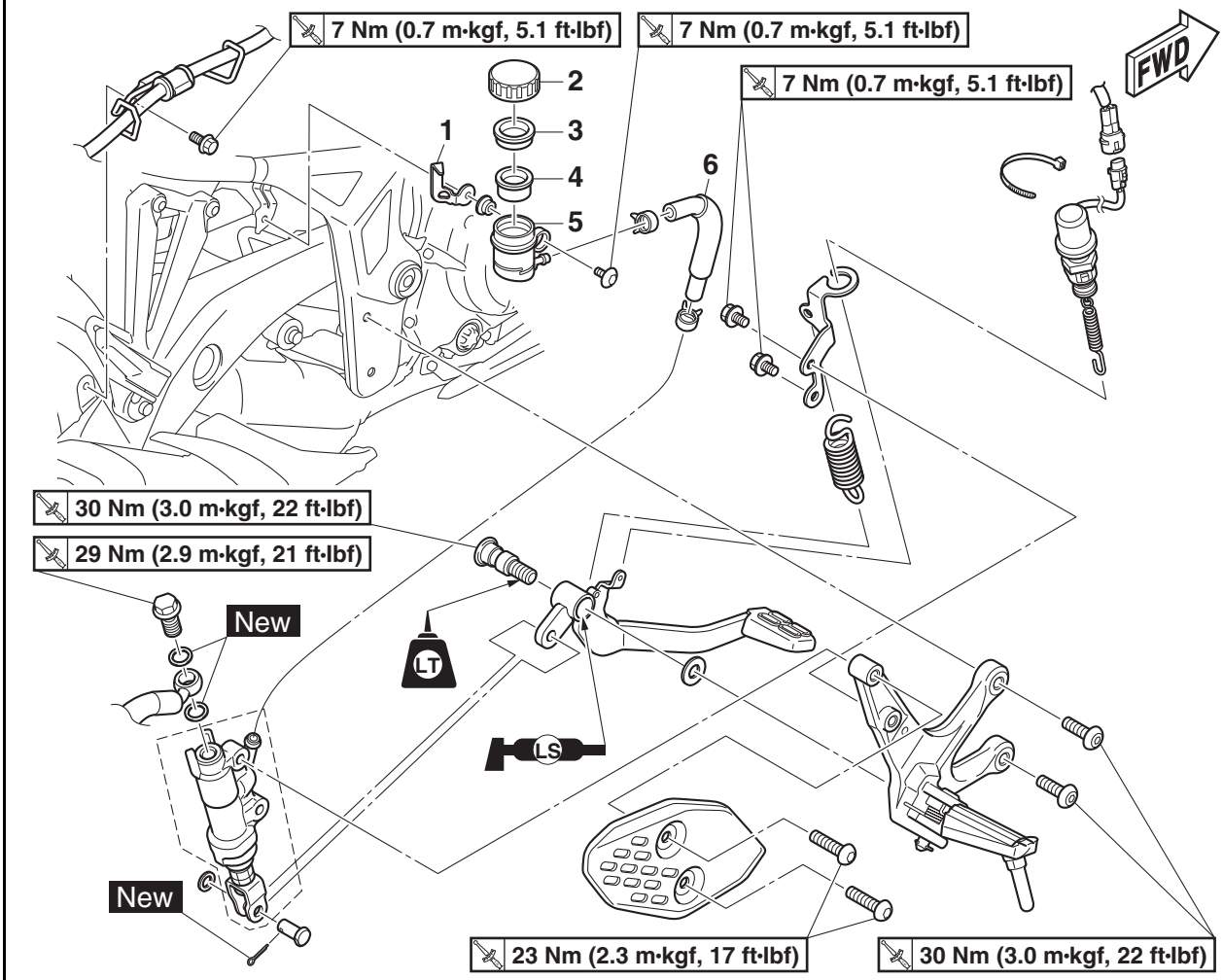

Order	Job/Parts to remove	Q'ty	Remarks
	Brake fluid		Drain. Refer to "BLEEDING THE HYDRAULIC BRAKE SYSTEM (ABS)" on page 3-14.
	Side panel assemblies (right)		Refer to "GENERAL CHASSIS (2)" on page 4-3.
1	Brake fluid reservoir holder	1	
2	Brake fluid reservoir cap	1	
3	Brake fluid reservoir diaphragm holder	1	
4	Brake fluid reservoir diaphragm	1	
5	Brake fluid reservoir	1	
6	Brake fluid reservoir hose	1	

Removing the rear brake master cylinder

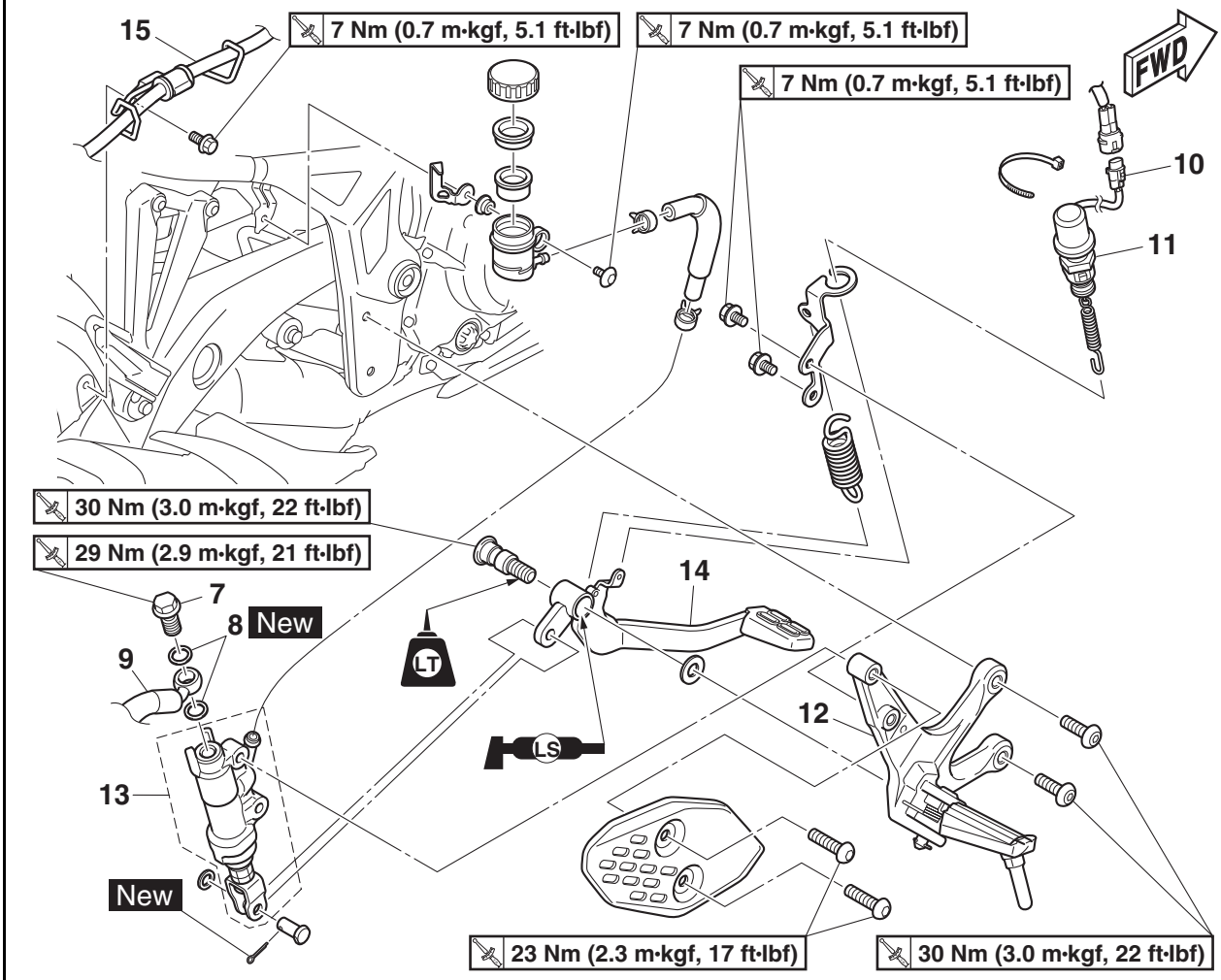

Order	Job/Parts to remove	Q'ty	Remarks
7	Rear brake hose union bolt (master cylinder side)	1	
8	Brake hose gasket	2	
9	Brake hose	1	Disconnect.
10	Rear brake light switch coupler	1	Disconnect.
11	Rear brake light switch	1	
12	Footrest assembly (right)	1	
13	Rear brake master cylinder	1	
14	Brake pedal	1	
15	Rear brake hose guide	1	

Disassembling the rear brake master cylinder

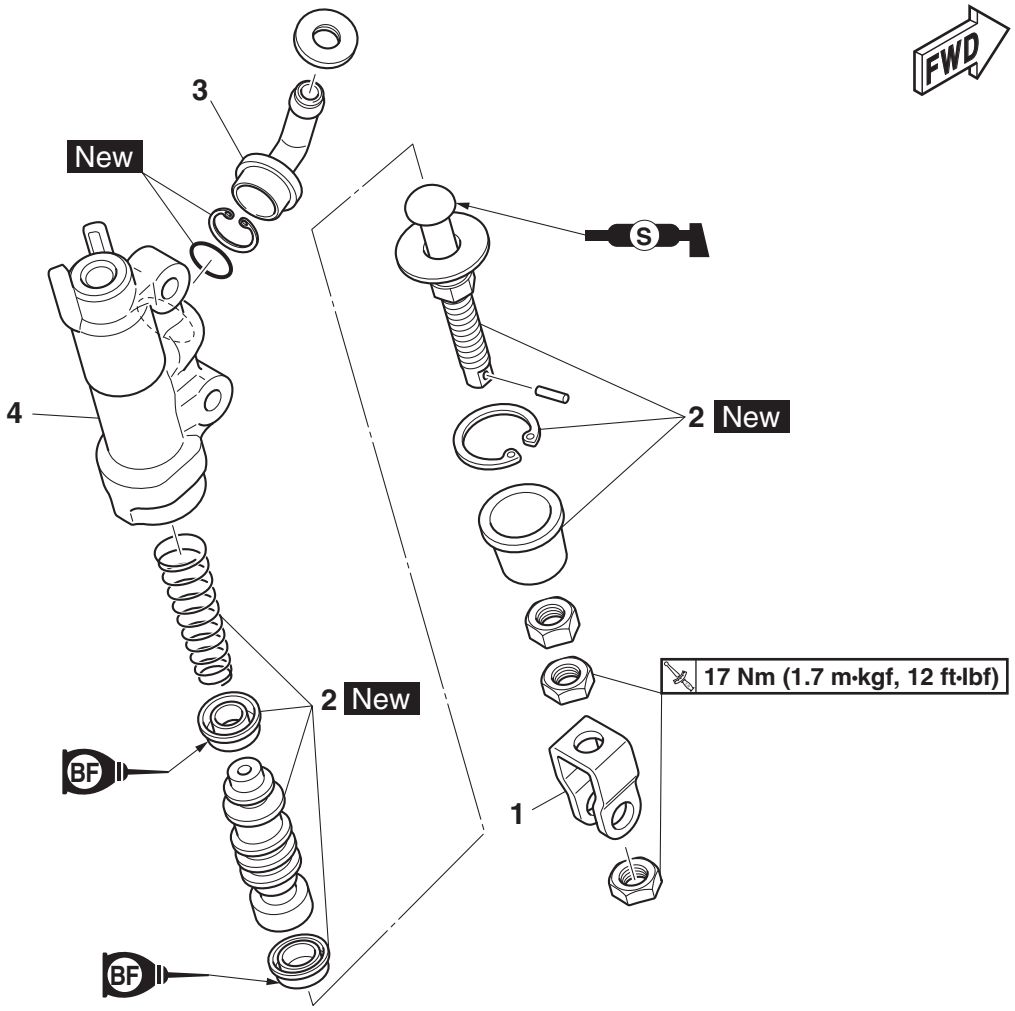

Order	Job/Parts to remove	Q'ty	Remarks
1	Brake master cylinder joint	1	
2	Brake master cylinder kit	1	
3	Hose joint	1	
4	Brake master cylinder body	1	

Removing the rear brake caliper

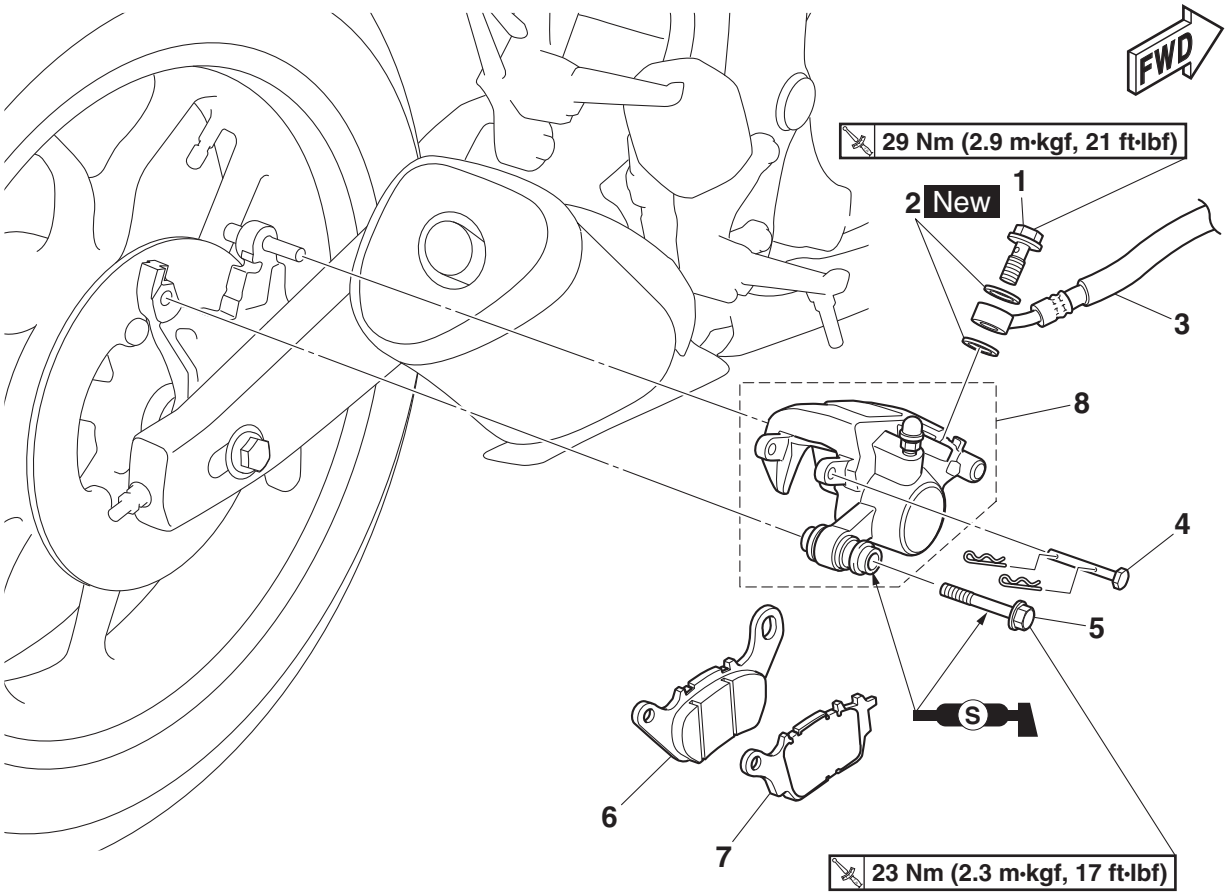

Order	Job/Parts to remove	Q'ty	Remarks
	Brake fluid		Drain. Refer to "BLEEDING THE HYDRAULIC BRAKE SYSTEM (ABS)" on page 3-14.
1	Rear brake hose union bolt (brake caliper side)	1	
2	Brake hose gasket	2	
3	Rear brake hose (hydraulic unit to brake caliper)	1	
4	Brake pad pin	1	
5	Rear brake caliper bolt	1	
6	Brake pad (inner)	1	
7	Brake pad (outer)	1	
8	Rear brake caliper	1	

Disassembling the rear brake caliper

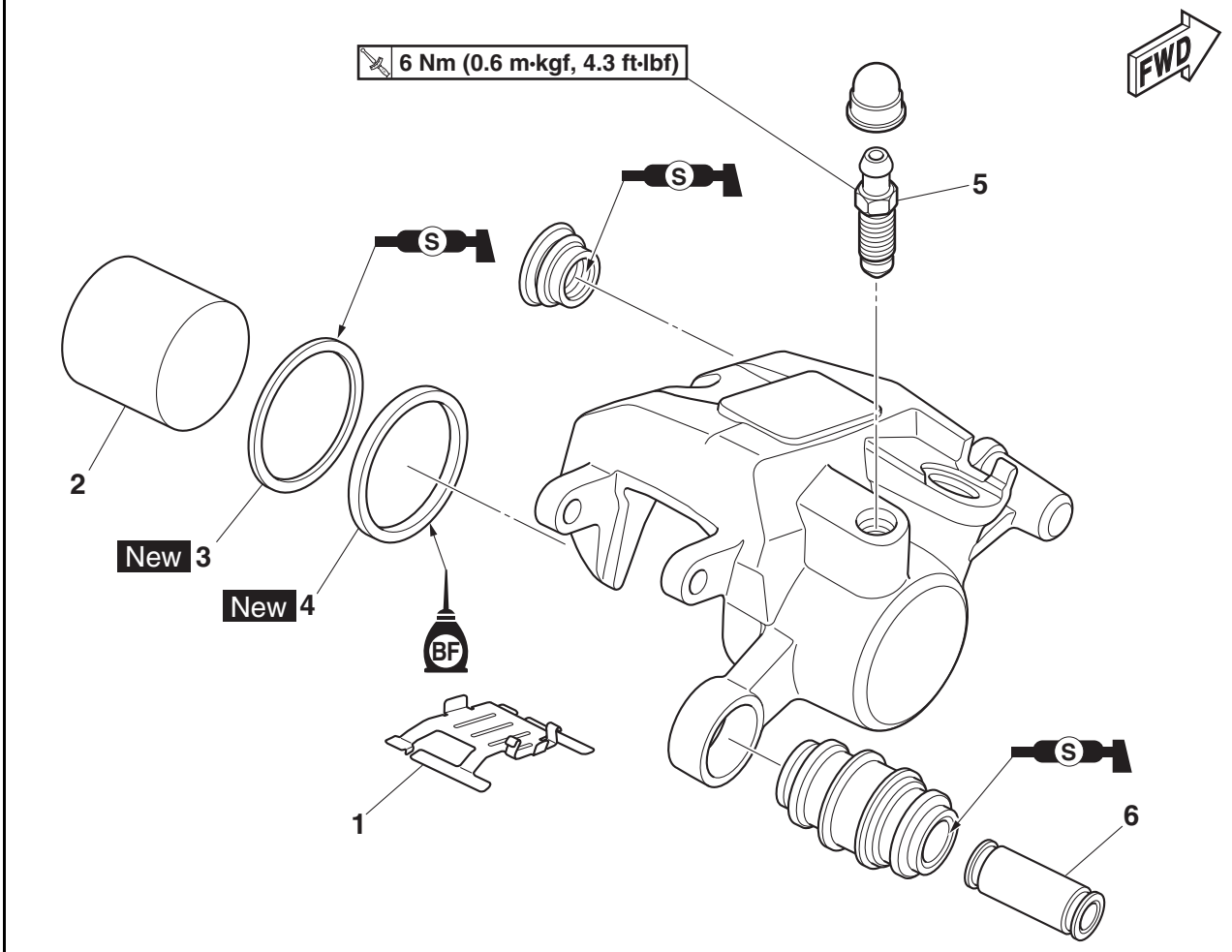

Order	Job/Parts to remove	Q'ty	Remarks
1	Brake pad spring	1	
2	Brake caliper piston	1	
3	Brake caliper piston dust seal	1	
4	Brake caliper piston seal	1	
5	Brake caliper bleed screw	1	
6	Spacer	1	

EAS30183
INTRODUCTION
EWA14101
WARNING

Disc brake components rarely require disassembly. Therefore, always follow these preventive measures:
- **Never disassemble brake components unless absolutely necessary.**
- **If any connection on the hydraulic brake system is disconnected, the entire brake system must be disassembled, drained, cleaned, properly filled, and bled after reassembly.**
- **Never use solvents on internal brake components.**
- **Use only clean or new brake fluid for cleaning brake components.**
- **Brake fluid may damage painted surfaces and plastic parts. Therefore, always clean up any spilt brake fluid immediately.**
- **Avoid brake fluid coming into contact with the eyes as it can cause serious injury.**

FIRST AID FOR BRAKE FLUID ENTERING THE EYES:
- **Flush with water for 15 minutes and get immediate medical attention.**

EAS30184
CHECKING THE REAR BRAKE DISC
1. Remove:
   - Rear wheel
     Refer to “REAR WHEEL” on page 4-26.
2. Check:
   - Rear brake disc
     Damage/galling → Replace.
3. Measure:
   - Brake disc deflection
     Out of specification → Correct the brake disc deflection or replace the brake disc.
     Refer to “CHECKING THE FRONT BRAKE DISC” on page 4-40.

Brake disc runout limit (as measured on wheel)
0.15 mm (0.0059 in)

4. Measure:
   - Brake disc thickness
     Measure the brake disc thickness at a few different locations.
     Out of specification → Replace.
     Refer to “CHECKING THE FRONT BRAKE DISC” on page 4-40.

Brake disc thickness limit
4.0 mm (0.16 in)

5. Adjust:
   - Brake disc deflection
     Refer to “CHECKING THE FRONT BRAKE DISC” on page 4-40.

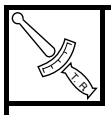

Rear brake disc bolt
23 Nm (2.3 m·kgf, 17 ft·lbf)
LOCTITE®

6. Install:
   - Rear wheel
     Refer to “REAR WHEEL” on page 4-26.

EAS30185
REPLACING THE REAR BRAKE PADS
TIP

When replacing the brake pads, it is not necessary to disconnect the brake hose or disassemble the brake caliper.

1. Measure:
   - Brake pad wear limit “a”
     Out of specification → Replace the brake pads as a set.

Brake pad lining thickness (inner)
7.7 mm (0.30 in)
Limit
0.8 mm (0.03 in)
Brake pad lining thickness (outer)
7.7 mm (0.30 in)
Limit
0.8 mm (0.03 in)

A

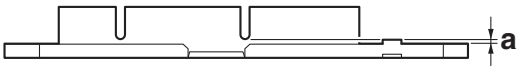

B

A. Inner
B. Outer

2. Install:
   - Brake pad shims
     (onto the brake pads)
   - Brake pad spring
     (into the rear brake caliper)
   - Brake pads

TIP

Always install new brake pads, brake pad shims, and brake pad spring as a set.

▼▼▼▼▼▼▼▼▼▼▼▼▼▼▼▼▼▼▼▼▼▼▼▼▼▼▼▼▼▼▼▼▼▼

a. Connect a clear plastic hose "1" tightly to the bleed screw "2". Put the other end of the hose into an open container.
b. Loosen the bleed screw and push the brake caliper piston into the brake caliper with your finger.

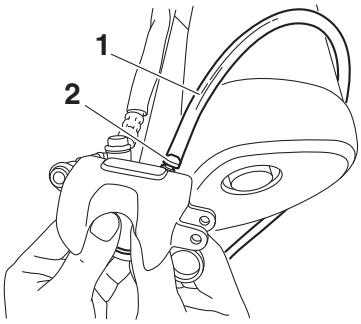

c. Tighten the bleed screw.

	Brake caliper bleed screw **6 Nm (0.6 m·kgf, 4.3 ft·lbf)**

d. Install the brake pad spring, brake pad shims and brake pads.

ECA18210

NOTICE

- **Do not allow grease to contact the brake pads.**
- **Remove any excess grease.**

TIP

The longer tangs "a" of the brake pad spring must point in the direction of the brake caliper piston.

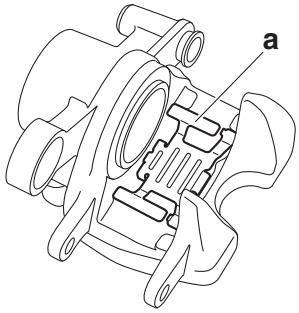

▲▲▲▲▲▲▲▲▲▲▲▲▲▲▲▲▲▲▲▲▲▲▲▲▲▲▲▲▲▲▲▲▲▲

3. Lubricate:
   - Rear brake caliper bolt

	Recommended lubricant **Silicone grease**

ECA18210

NOTICE

- **Do not allow grease to contact the brake pads.**
- **Remove any excess grease.**

4. Install:
   - Rear brake caliper
   - Rear brake caliper bolt

	Rear brake caliper bolt **23 Nm (2.3 m·kgf, 17 ft·lbf)**

5. Check:
   - Brake fluid level
     Below the minimum level mark "a" → Add the specified brake fluid to the proper level.
     Refer to "CHECKING THE BRAKE FLUID LEVEL" on page 3-15.

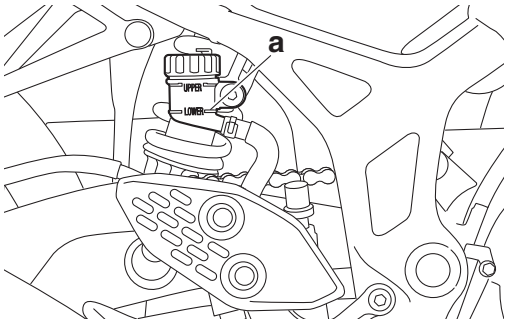

6. Check:
   - Brake pedal operation
     Soft or spongy feeling → Bleed the brake system.

Refer to “BLEEDING THE HYDRAULIC BRAKE SYSTEM (ABS)” on page 3-14.

EAS30186
REMOVING THE REAR BRAKE CALIPER

TIP

Before disassembling the brake caliper, drain the brake fluid from the entire brake system.

1. Remove:
   - Rear brake hose union bolt “1”
   - Brake hose gaskets “2”
   - Brake hose “3”

TIP

Put the end of the brake hose into a container and pump out the brake fluid carefully.

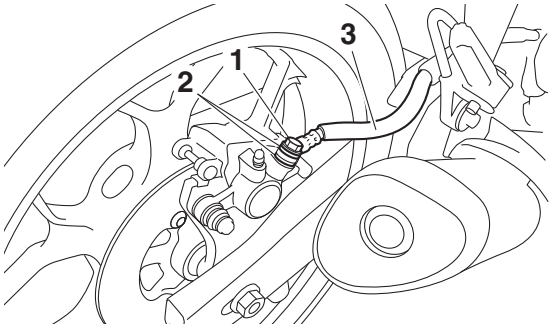

EAS30187
DISASSEMBLING THE REAR BRAKE CALIPER

1. Remove:
   - Brake caliper piston “1”
   - Brake caliper piston dust seal “2”
   - Brake caliper piston seal “3”

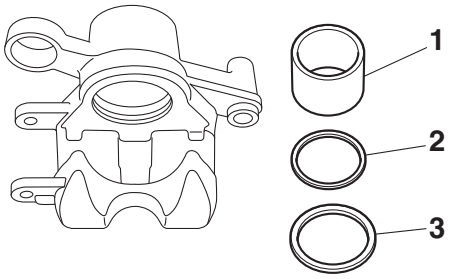

▼▼▼▼▼▼▼▼▼▼▼▼▼▼▼▼▼▼▼▼▼▼▼▼▼▼▼▼▼▼▼▼▼▼

a. Blow compressed air into the brake hose joint opening “a” to force out the piston from the brake caliper.

EWA13550

WARNING

- **Cover the brake caliper piston with a rag. Be careful not to get injured when the piston is expelled from the brake caliper.**
- **Never try to pry out the brake caliper piston.**

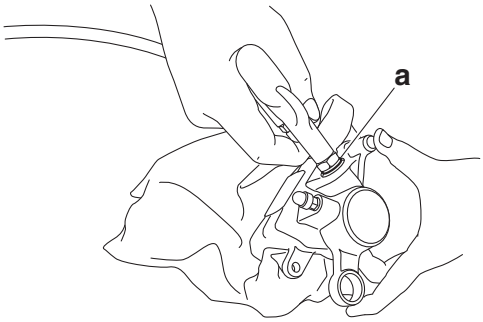

b. Remove the brake caliper piston dust seal and brake caliper piston seal.

▲▲▲▲▲▲▲▲▲▲▲▲▲▲▲▲▲▲▲▲▲▲▲▲▲▲▲▲▲▲▲▲▲▲

EAS30188
CHECKING THE REAR BRAKE CALIPER

Recommended brake component replacement schedule	
Brake pads	If necessary
Piston seal	Every two years
Piston dust seal	Every two years
Brake hoses	Every four years
Brake fluid	Every two years and whenever the brake is disassembled

1. Check:
   - Brake caliper piston “1”
     Rust/scratches/wear → Replace the brake caliper piston.
   - Brake caliper cylinder “2”
     Scratches/wear → Replace the brake caliper assembly.
   - Brake caliper body “3”
     Cracks/damage → Replace the brake caliper assembly.
   - Brake fluid delivery passages (brake caliper body)
     Obstruction → Blow out with compressed air.

EWA17070

WARNING

Whenever a brake caliper is disassembled, replace the brake caliper piston dust seal and brake caliper piston seal.

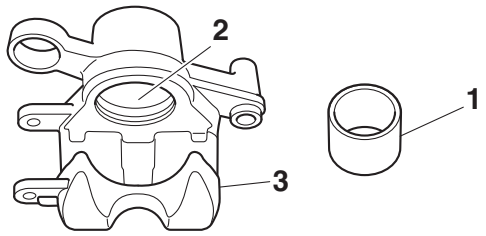

2. Check:
   - Rear brake caliper bracket “1”
     Cracks/damage → Replace.
     Refer to “REAR WHEEL” on page 4-26.

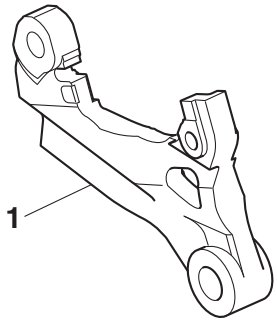

EAS30189

ASSEMBLING THE REAR BRAKE CALIPER

EWA17080

WARNING

- **Before installation, all internal brake components should be cleaned and lubricated with clean or new brake fluid.**
- **Never use solvents on internal brake components as they will cause the brake caliper piston dust seal and brake caliper piston seal to swell and distort.**
- **Whenever a brake caliper is disassembled, replace the brake caliper piston dust seal and brake caliper piston seal.**

Specified brake fluid
DOT 4

EAS30190

INSTALLING THE REAR BRAKE CALIPER

1. Lubricate:
   - Rear brake caliper bolt

Recommended lubricant
Silicone grease

2. Install:
   - Brake pad shims
     (onto the brake pads)
   - Brake pads
   - Rear brake caliper “1”
     Refer to “REPLACING THE REAR BRAKE PADS” on page 4-53.
   - Brake hose gaskets “2” New
   - Brake hose “3”
   - Rear brake hose union bolt “4”

Rear brake caliper bolt
23 Nm (2.3 m·kgf, 17 ft·lbf)
Rear brake hose union bolt (brake caliper side)
29 Nm (2.9 m·kgf, 21 ft·lbf)

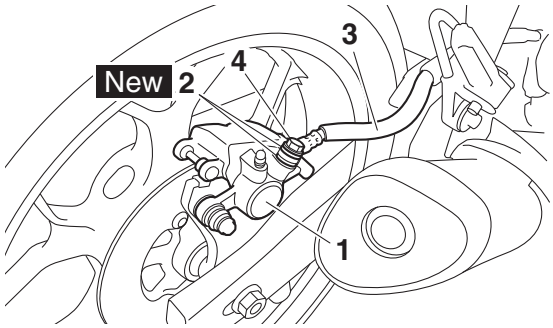

EWA13531

WARNING

Proper brake hose routing is essential to insure safe vehicle operation.

ECA19080

NOTICE

When installing the brake hose onto the brake caliper “1”, make sure the brake pipe “a” passes between the projections “b” on the brake caliper.

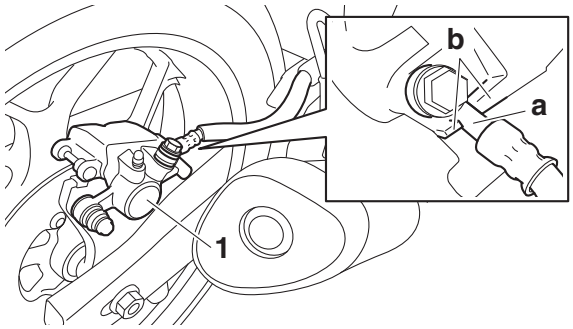

3. Fill:
   - Brake fluid reservoir
     (with the specified amount of the specified brake fluid)

Specified brake fluid
DOT 4

EWA13090

WARNING

- **Use only the designated brake fluid. Other brake fluids may cause the rubber seals to deteriorate, causing leakage and poor brake performance.**
- **Refill with the same type of brake fluid that is already in the system. Mixing brake fluids may result in a harmful chemical reaction, leading to poor brake performance.**
- **When refilling, be careful that water does not enter the brake fluid reservoir. Water will significantly lower the boiling point of the brake fluid and could cause vapor lock.**

ECA13540

NOTICE

Brake fluid may damage painted surfaces and plastic parts. Therefore, always clean up any spilt brake fluid immediately.

4. Bleed:
   - Brake system
     Refer to "BLEEDING THE HYDRAULIC BRAKE SYSTEM (ABS)" on page 3-14.
5. Check:
   - Brake fluid level
     Below the minimum level mark "a" → Add the specified brake fluid to the proper level.
     Refer to "CHECKING THE BRAKE FLUID LEVEL" on page 3-15.

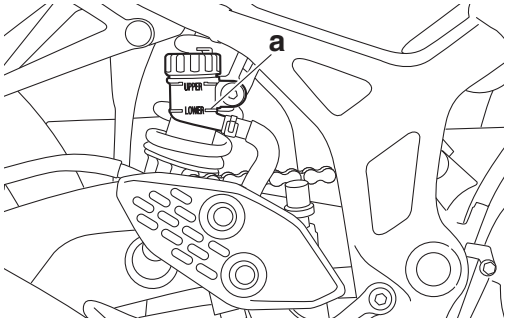

6. Check:
   - Brake pedal operation
     Soft or spongy feeling → Bleed the brake system.
     Refer to "BLEEDING THE HYDRAULIC BRAKE SYSTEM (ABS)" on page 3-14.

EAS30193

REMOVING THE REAR BRAKE MASTER CYLINDER

1. Remove:
   - Brake hose union bolt "1"
   - Brake hose gaskets "2"
   - Brake hose "3"

TIP

To collect any remaining brake fluid, place a container under the master cylinder and the end of the brake hose.

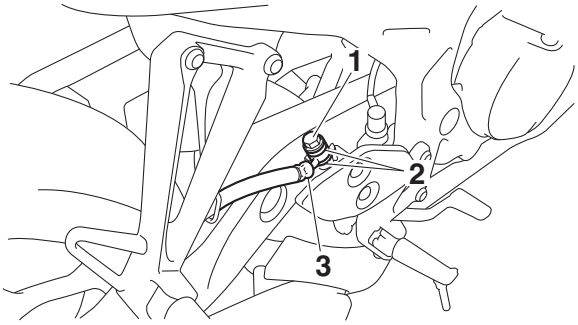

EAS30194

CHECKING THE REAR BRAKE MASTER CYLINDER

1. Check:
   - Brake master cylinder
     Damage/scratches/wear → Replace.
   - Brake fluid delivery passages (brake master cylinder body)
     Obstruction → Blow out with compressed air.
2. Check:
   - Brake master cylinder kit
     Damage/scratches/wear → Replace.
3. Check:
   - Brake fluid reservoir "1"
   - Brake fluid reservoir diaphragm holder "2"
     Cracks/damage → Replace.
   - Brake fluid reservoir diaphragm "3"
     Damage/wear → Replace.

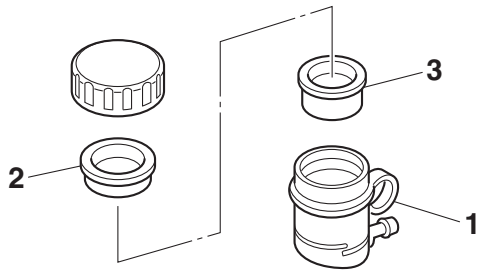

4. Check:
   - Brake hose
   - Brake fluid reservoir hose
     Cracks/damage → Replace.

EAS30195
ASSEMBLING THE REAR BRAKE MASTER CYLINDER

EWA13520
WARNING

- **Before installation, all internal brake components should be cleaned and lubricated with clean or new brake fluid.**
- **Never use solvents on internal brake components.**

Specified brake fluid
DOT 4

1. Install:
   - Brake hose joint
   - Brake master cylinder kit New
   - Brake master cylinder joint “1”

TIP

The rear brake master cylinder joint installation length “a” should be 74.8 mm (2.94 in).

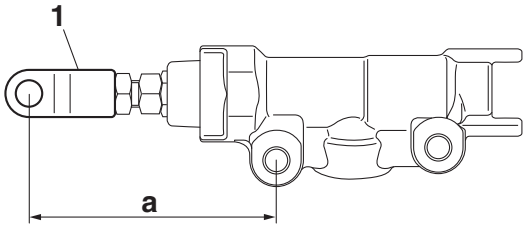

EAS30196
INSTALLING THE REAR BRAKE MASTER CYLINDER

1. Install:
   - Rear brake hose guide “1”

TIP

Make sure that the projection “a” on the rear brake hose guide contacts the swingarm.

Rear brake hose guide bolt
7 Nm (0.7 m·kgf, 5.1 ft·lbf)

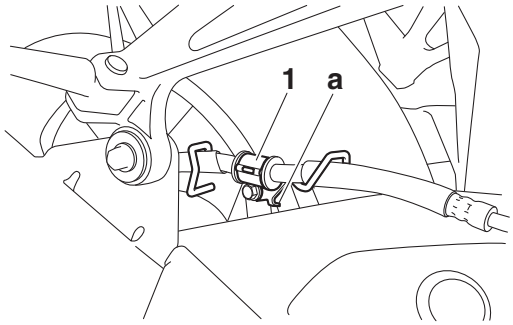

2. Install:
   - Brake hose “1”
   - Brake hose gaskets “2” New
   - Brake hose union bolt “3”

Rear brake hose union bolt (master cylinder side)
29 Nm (2.9 m·kgf, 21 ft·lbf)

EWA13531
WARNING

Proper brake hose routing is essential to insure safe vehicle operation.

ECA14160
NOTICE

When installing the brake hose onto the brake master cylinder, make sure the brake pipe touches the projection “a” as shown.

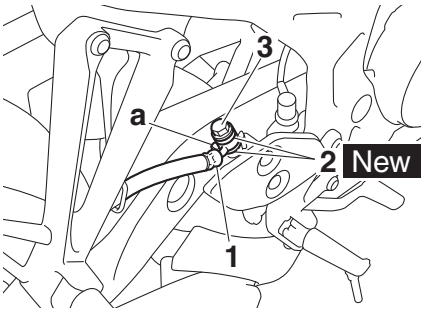

3. Fill:
   - Brake fluid reservoir
     (with the specified amount of the specified brake fluid)

Specified brake fluid
DOT 4

EWA13090
WARNING

- **Use only the designated brake fluid. Other brake fluids may cause the rubber seals to deteriorate, causing leakage and poor brake performance.**
- **Refill with the same type of brake fluid that is already in the system. Mixing brake fluids may result in a harmful chemical reaction, leading to poor brake performance.**
- **When refilling, be careful that water does not enter the brake fluid reservoir. Water will significantly lower the boiling point of the brake fluid and could cause vapor lock.**

ECA13540

NOTICE

Brake fluid may damage painted surfaces and plastic parts. Therefore, always clean up any spilt brake fluid immediately.

4. Bleed:
   - Brake system
     Refer to “BLEEDING THE HYDRAULIC BRAKE SYSTEM (ABS)” on page 3-14.
5. Check:
   - Brake fluid level
     Below the minimum level mark “a” → Add the specified brake fluid to the proper level.
     Refer to “CHECKING THE BRAKE FLUID LEVEL” on page 3-15.

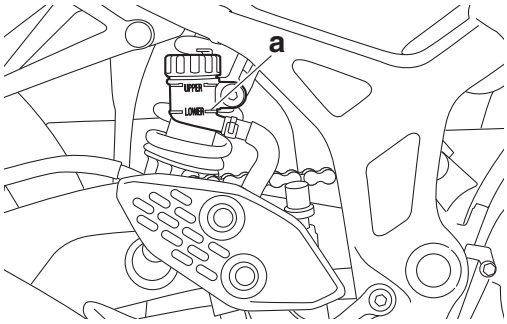

6. Adjust:
   - Rear brake light operation timing
     Refer to “ADJUSTING THE REAR BRAKE LIGHT SWITCH” on page 3-26.

EAS20032

ABS (ANTI-LOCK BRAKE SYSTEM)

Removing the hydraulic unit assembly

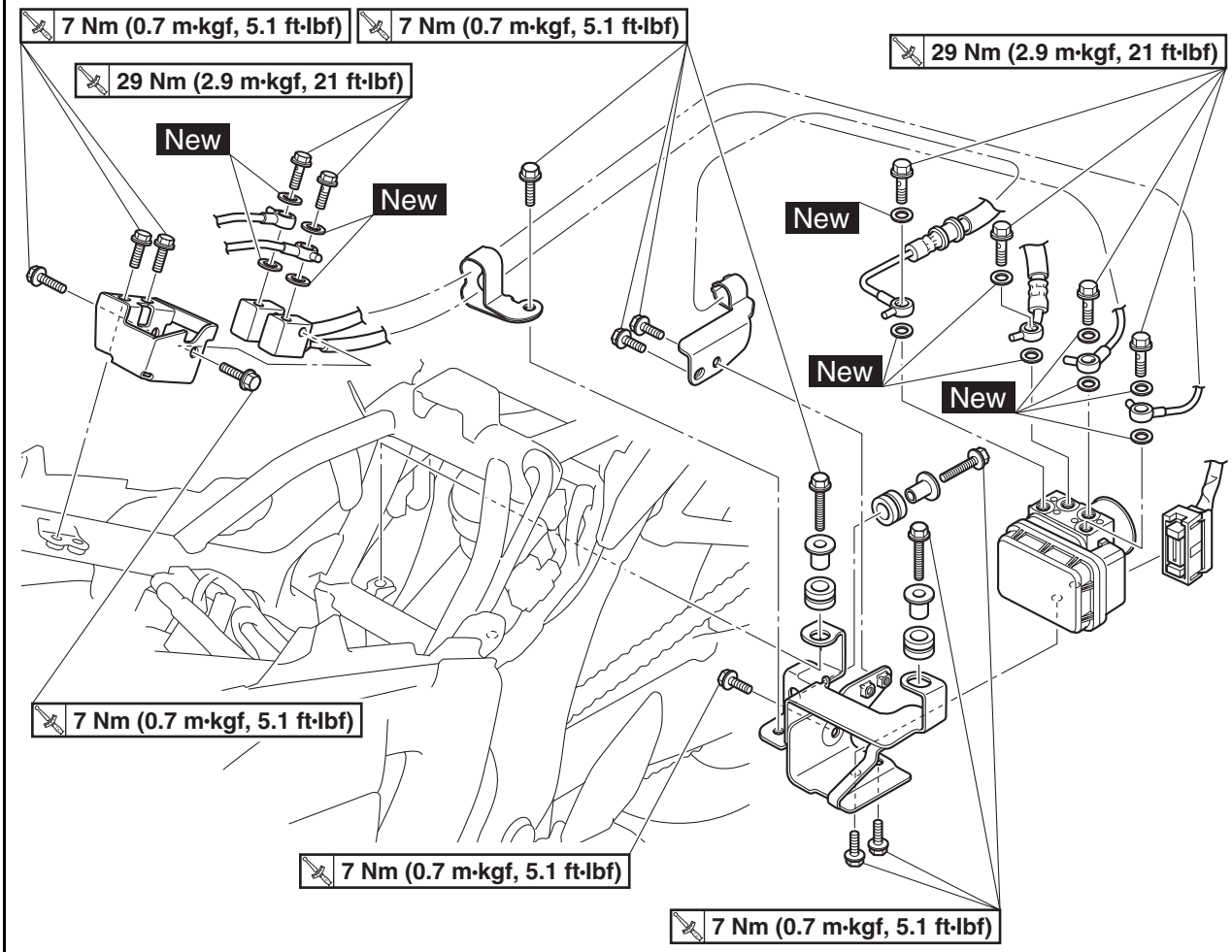

Order	Job/Parts to remove	Q'ty	Remarks
	Brake fluid		Drain. Refer to"BLEEDING THE HYDRAULIC BRAKE SYSTEM (ABS)" on page 3-14.
	Rider seat		Refer to "GENERAL CHASSIS (1)" on page 4-1.
	Side panel		Refer to "GENERAL CHASSIS (2)" on page 4-3.
	Fuel tank cover assembly		Refer to "GENERAL CHASSIS (3)" on page 4-8.
	Fuel tank		Refer to "FUEL TANK" on page 7-1.
	Air filter case		Refer to "GENERAL CHASSIS (5)" on page 4-15.
	Drive chain guard		Refer to "SWINGARM AND REAR SHOCK ABSORBER ASSEMBLY" on page 4-87.

Removing the hydraulic unit assembly

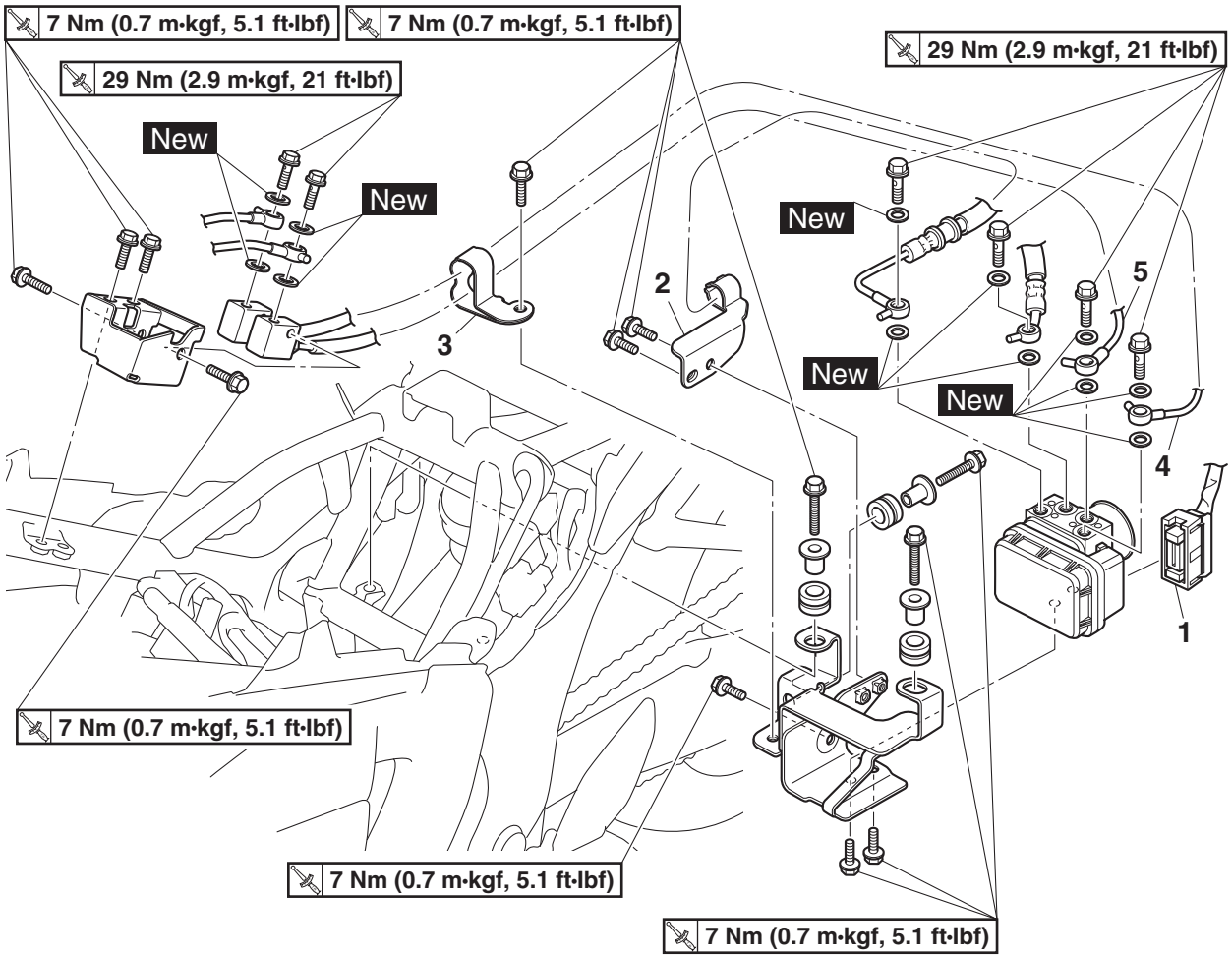

Order	Job/Parts to remove	Q'ty	Remarks
1	ABS ECU coupler	1	
2	Rear brake hose holder	1	
3	Front brake hose holder	1	
4	Front brake hose (hydraulic unit to brake hose joint)	1	
5	Front brake hose (brake hose joint to hydraulic unit)	1	

Removing the hydraulic unit assembly

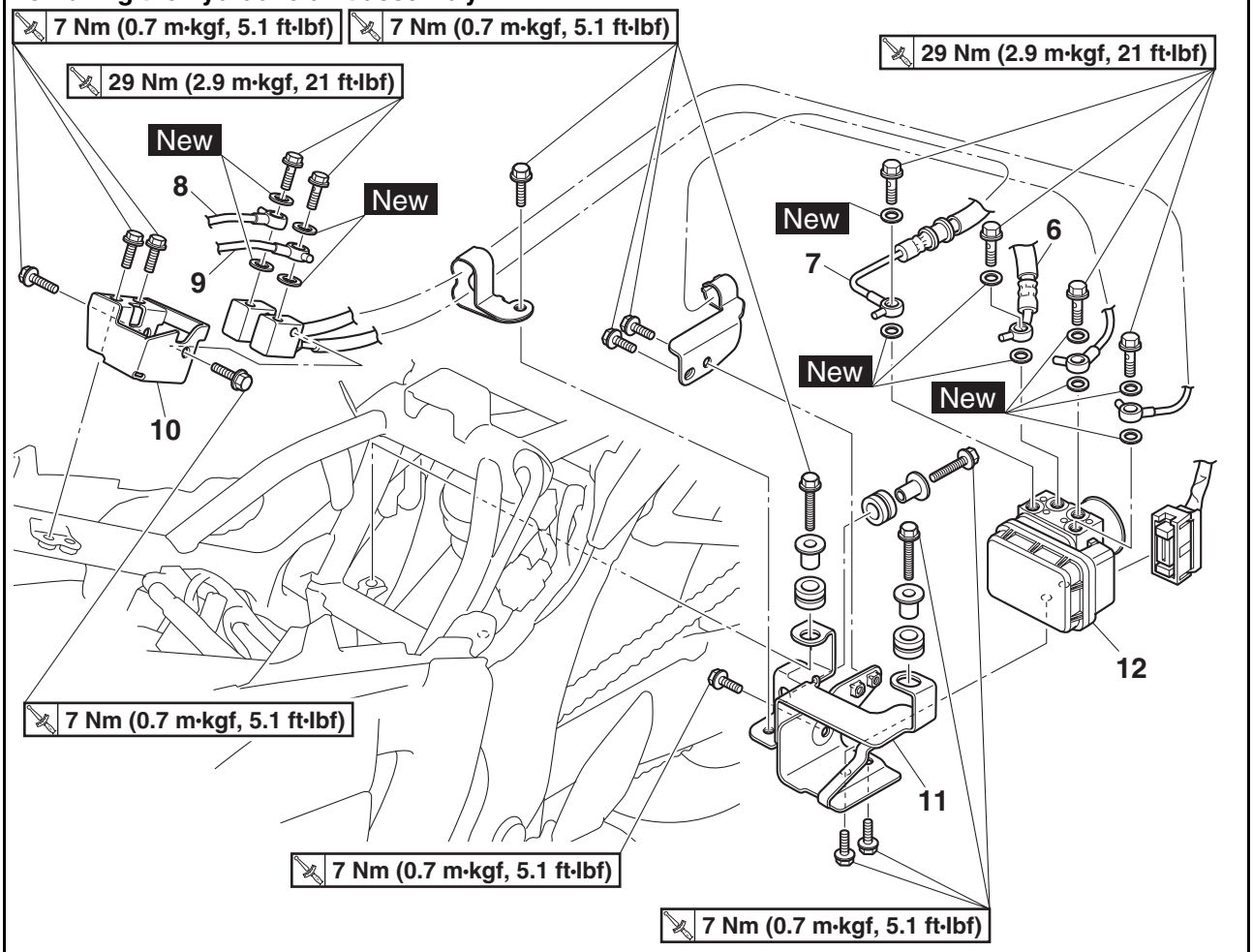

Order	Job/Parts to remove	Q'ty	Remarks
6	Rear brake hose (brake master cylinder to hydraulic unit)	1	
7	Rear brake hose (hydraulic unit to brake caliper)	1	
8	Front brake hose (brake hose joint to hydraulic unit)	1	
9	Front brake hose (brake master cylinder to brake hose joint)	1	
10	Brake hose gasket	8	
11	Hydraulic unit bracket	1	
12	Hydraulic unit assembly	1	

EAS30197
REMOVING THE HYDRAULIC UNIT ASSEMBLY

ECA21091
NOTICE

Unless necessary, avoid removing and installing the brake hoses of the hydraulic unit assembly.

EWA13930
WARNING

Refill with the same type of brake fluid that is already in the system. Mixing fluids may result in a harmful chemical reaction, leading to poor braking performance.

ECA18241
NOTICE

- **Handle the ABS components with care since they have been accurately adjusted. Keep them away from dirt and do not subject them to shocks.**
- **Do not turn the main switch to "ON" when removing the hydraulic unit assembly.**
- **Do not clean with compressed air.**
- **Do not reuse the brake fluid.**
- **Brake fluid may damage painted surfaces and plastic parts. Therefore, always clean up any spilt brake fluid immediately.**
- **Do not allow any brake fluid to contact the couplers. Brake fluid may damage the couplers and cause bad contacts.**
- **If the union bolts for the hydraulic unit assembly have been removed, be sure to tighten them to the specified torque and bleed the brake system.**

1. Disconnect:
   - ABS ECU coupler "1"

TIP

Pull the lock lever "a" of the ABS ECU coupler in the direction of the arrow shown, and then disconnect the coupler.

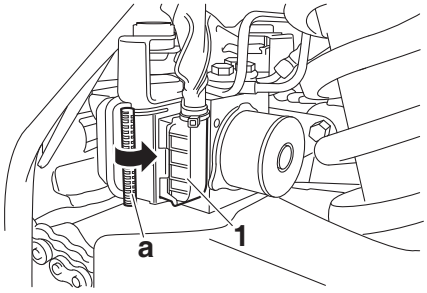

2. Remove:
   - Brake hoses

TIP

Do not operate the brake lever and brake pedal while removing the brake hoses.

ECA14530
NOTICE

When removing the brake hoses, cover the area around the hydraulic unit to catch any spilt brake fluid. Do not allow the brake fluid to contact other parts.

3. Remove:
   - Hydraulic unit assembly "1"

TIP

- To avoid brake fluid leakage and to prevent foreign materials from entering the hydraulic unit assembly, insert a rubber plug "a" or a bolt (M10 × 1.25) into each brake hose union bolt hole.
- When using a bolt, do not tighten the bolt until the bolt head touches the hydraulic unit. Otherwise, the brake hose union bolt seating surface could be deformed.

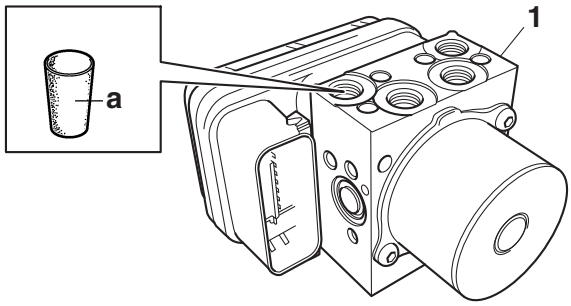

EAS30198
CHECKING THE HYDRAULIC UNIT ASSEMBLY

1. Check:
   - Hydraulic unit assembly
     Cracks/damage → Replace the hydraulic unit assembly and the brake hoses that are connected to the assembly as a set.

EAS30200
INSTALLING THE HYDRAULIC UNIT ASSEMBLY

1. Install:
   - Hydraulic unit assembly

	Hydraulic unit bolt **7 Nm (0.7 m·kgf, 5.1 ft·lbf)**

TIP

Do not allow any foreign materials to enter the hydraulic unit assembly or the brake hoses when installing the hydraulic unit assembly.

ECA21110

NOTICE

Do not remove the rubber plugs or bolts (M10 × 1.25) installed in the brake hose union bolt holes before installing the hydraulic unit assembly.

2. Remove:
   - Rubber plugs or bolts (M10 × 1.25)
3. Install:
   - Rear brake hose (brake master cylinder to hydraulic unit) “1”
   - Front brake hose (brake hose joint to hydraulic unit) “2”
   - Front brake hose (hydraulic unit to brake hose joint) “3”
   - Rear brake hose (hydraulic unit to brake caliper) “4”

Front brake hose union bolt
29 Nm (2.9 m·kgf, 21ft·lbf)
Rear brake hose union bolt
29 Nm (2.9 m·kgf, 21ft·lbf)

ECA21121

NOTICE

If the brake hose union bolt does not turn easily, replace the hydraulic unit assembly, brake hoses, and related parts as a set.

▼▼▼▼▼▼▼▼▼▼▼▼▼▼▼▼▼▼▼▼▼▼▼▼▼▼▼▼▼▼▼▼▼▼

a. Temporarily install the brake hoses as shown in the illustration.
b. Position the front brake hose (brake hose joint to hydraulic unit) “2” so that its projection “a” contacts the rear brake hose (brake master cylinder to hydraulic unit) “1”, and then temporarily tighten the union bolt for the brake hose (brake hose joint to hydraulic unit).
c. Temporarily tighten the union bolt for the rear brake hose (brake master cylinder to hydraulic unit) “1”.

TIP

Make sure that the pipe section “b” of the brake hose (rear brake master cylinder to hydraulic unit) does not contact the hydraulic unit.

d. Position the front brake hose (hydraulic unit to brake hose joint) “3” so that its projection “c” contacts the front brake hose (brake hose joint to hydraulic unit) “2”, and then temporarily tighten the union bolt for the front brake hose (hydraulic unit to brake hose joint).
e. Position the rear brake hose (hydraulic unit to brake caliper) “4” so that its projection “d” contacts the rear brake hose bracket, and then temporarily tighten the union bolt for the rear brake hose (hydraulic unit to brake caliper).
f. Tighten the brake hose union bolts to specification.

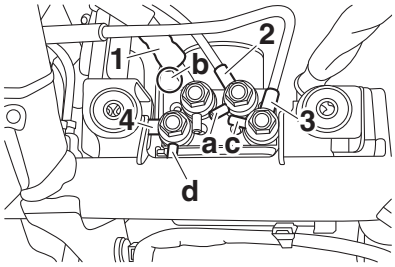

▲▲▲▲▲▲▲▲▲▲▲▲▲▲▲▲▲▲▲▲▲▲▲▲▲▲▲▲▲▲▲▲▲▲

4. Connect:
   - ABS ECU coupler “1”

TIP

- Connect the ABS ECU coupler, and then push the lock lever “a” of the coupler in the direction of the arrow shown.
- Make sure that the ABS ECU coupler is connected in the correct position as shown in illustration “A”.

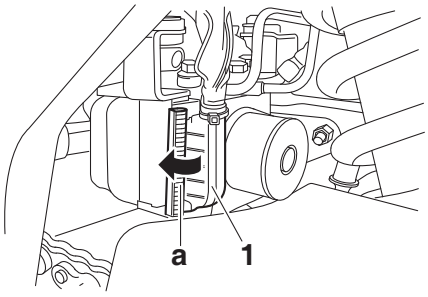

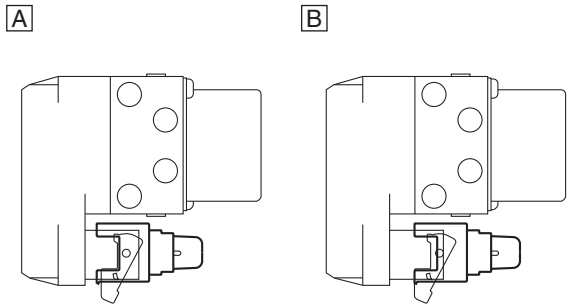

A. The ABS ECU coupler is connected correctly.
B. The ABS ECU coupler is not connected.

5. Fill:
   - Brake master cylinder reservoir
   - Brake fluid reservoir
     (with the specified amount of the specified brake fluid)

Specified brake fluid
DOT 4

EWA13090

WARNING

- **Use only the designated brake fluid. Other brake fluids may cause the rubber seals to deteriorate, causing leakage and poor brake performance.**
- **Refill with the same type of brake fluid that is already in the system. Mixing brake fluids may result in a harmful chemical reaction, leading to poor brake performance.**
- **When refilling, be careful that water does not enter the brake fluid reservoir. Water will significantly lower the boiling point of the brake fluid and could cause vapor lock.**

ECA13540

NOTICE

Brake fluid may damage painted surfaces and plastic parts. Therefore, always clean up any spilt brake fluid immediately.

6. Bleed:
   - Brake system
     Refer to “BLEEDING THE HYDRAULIC BRAKE SYSTEM (ABS)” on page 3-14.
7. Check the operation of the hydraulic unit according to the brake lever and the brake pedal response. (Refer to “HYDRAULIC UNIT OPERATION TESTS” on page 4-65.)

ECA14770

NOTICE

Always check the operation of the hydraulic unit according to the brake lever and the brake pedal response.

8. Delete the fault codes. (Refer to “[B-3] DELETING THE FAULT CODES” on page 8-108.)
9. Perform a trial run. (Refer to “CHECKING THE ABS WARNING LIGHT” on page 4-68.)

EAS30930

HYDRAULIC UNIT OPERATION TESTS

The reaction-force pulsating action generated in the brake lever and brake pedal when the ABS is activated can be tested when the vehicle is stopped.

The hydraulic unit operation can be tested using the following two methods.

- Brake line routing confirmation: this test checks the function of the ABS after the system was disassembled, adjusted, or serviced.
- ABS reaction-force confirmation: this test generates the same reaction-force pulsating action that is generated in the brake lever and brake pedal when the ABS is activated.

Brake line routing confirmation

EWA13120

WARNING

Securely support the vehicle so that there is no danger of it falling over.

TIP

- For the brake line routing confirmation, use the diagnosis mode of the Yamaha diagnostic tool.
- Before performing the brake line routing confirmation, make sure that no malfunctions have been detected in the ABS ECU and that the wheels are not rotating.

1. Place the vehicle on a suitable stand.
2. Turn the main switch to “OFF”.
3. Remove:
   - Passenger seat
   - Rider seat
     Refer to “GENERAL CHASSIS (1)” on page 4-1.
4. Check:
   - Battery voltage
     Lower than 12.8 V → Charge or replace the battery.

Battery voltage
Higher than 12.8 V

TIP

If the battery voltage is lower than 12.8 V, charge the battery, and then perform brake line routing confirmation.

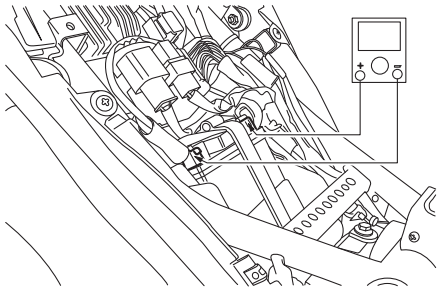

5. Removing the protective cap “1”, and then connect the Yamaha diagnostic tool to the Yamaha diagnostic tool test coupler (4P).

	Yamaha diagnostic tool 90890-03231

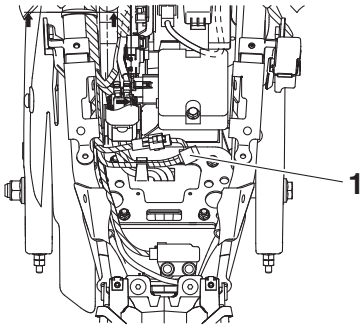

6. Start the Yamaha diagnostic tool and display the diagnosis mode screen.
7. Select code No. 2, “Brake line routing confirmation”.
8. Click “Action” “1”, and then operate the brake lever “2” and brake pedal “3” simultaneously.

TIP

- The hydraulic unit operates 1 second after the brake lever and brake pedal are operated simultaneously and continues for approximately 5 seconds.
- The operation of the hydraulic unit can be confirmed using the indicator.
  On: The hydraulic unit is operating.
  Flashing: The conditions for operating the hydraulic unit have not been met.
  Off: The brake lever and brake pedal are not being operated.

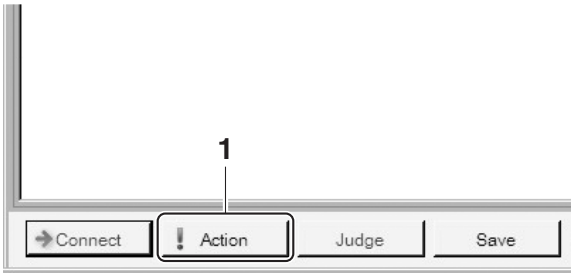

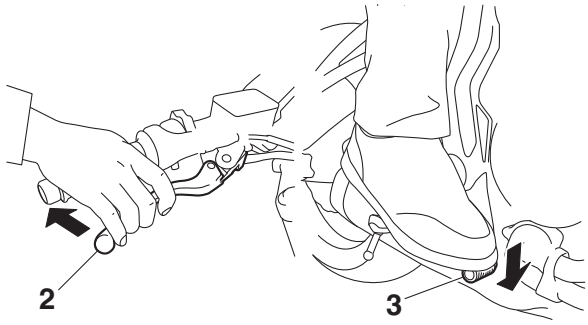

9. Check:
   - Hydraulic unit operation
     Click “Action”, a single pulse will be generated in the brake lever “1”, brake pedal “2”, and again in the brake lever “1”, in this order.

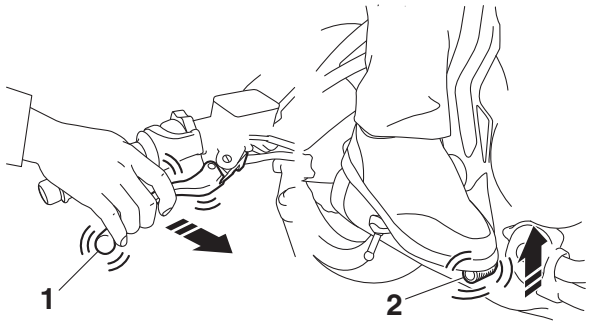

TIP

“ON” and “OFF” on the tool screen indicate when the brakes are being applied and released respectively.

ECA18280

NOTICE

- **Check that the pulse is felt in the brake lever, brake pedal, and again in the brake lever, in this order.**
- **If the pulse is felt in the brake pedal before it is felt in the brake lever, check that the brake hoses and brake pipes are connected correctly to the hydraulic unit assembly.**
- **If the pulse is hardly felt in either the brake lever or brake pedal, check that the brake hoses and brake pipes are connected correctly to the hydraulic unit assembly.**

10. If the operation of the hydraulic unit is normal, delete all of the fault codes.

ABS reaction-force confirmation

EWA13120

WARNING

Securely support the vehicle so that there is no danger of it falling over.

TIP

- For the ABS reaction-force confirmation, use the diagnosis mode of the Yamaha diagnostic tool. For more information, refer to the operation manual of the Yamaha diagnostic tool.
- Before performing the ABS reaction-force confirmation, make sure that no malfunctions have been detected in the ABS ECU and that the wheels are not rotating.

1. Place the vehicle on a suitable stand.
2. Turn the main switch to “OFF”.
3. Remove:
   - Passenger seat
   - Rider seat
     Refer to “GENERAL CHASSIS (1)” on page 4-1.
4. Check:
   - Battery voltage
     Lower than 12.8 V → Charge or replace the battery.

	Battery voltage **Higher than 12.8 V**

TIP

If the battery voltage is lower than 12.8 V, charge the battery, and then perform ABS reaction-force confirmation.

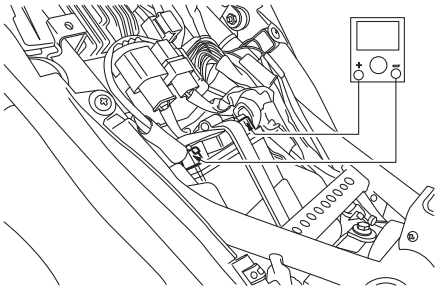

5. Removing the protective cap “1”, and then connect the Yamaha diagnostic tool to the ABS test coupler (4P).

	Yamaha diagnostic tool **90890-03231**

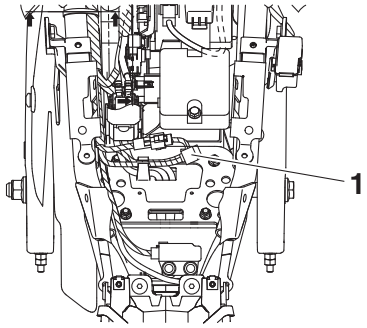

6. Start the Yamaha diagnostic tool and display the diagnosis mode screen.
7. Select code No. 1, “ABS reaction-force confirmation”.
8. Click “Action” “1”, and then operate the brake lever “2” and brake pedal “3” simultaneously.

TIP

- The hydraulic unit operates 1 second after the brake lever and brake pedal are operated simultaneously and continues for approximately 5 seconds.
- The operation of the hydraulic unit can be confirmed using the indicator.
  On: The hydraulic unit is operating.
  Flashing: The conditions for operating the hydraulic unit have not been met.
  Off: The brake lever and brake pedal are not being operated.

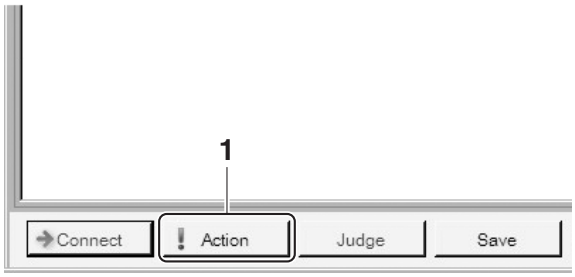

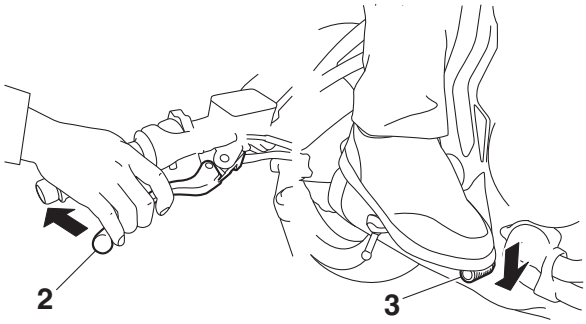

9. A reaction-force pulsating action is generated in the brake lever “1” and continues for a few seconds.

TIP

- The reaction-force pulsating action consists of quick pulses.
- Be sure to continue operating the brake lever and brake pedal even after the pulsating action has stopped.
- “ON” and “OFF” on the tool screen indicate when the brakes are being applied and released respectively.

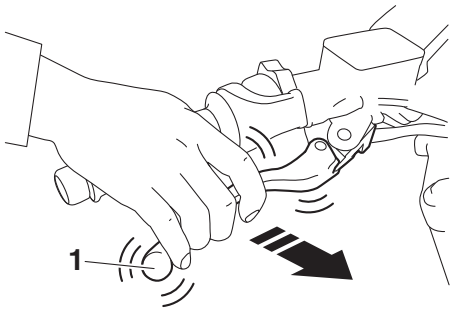

10. After the pulsating action has stopped in the brake lever, it is generated in the brake pedal “1” and continues for a few seconds.

TIP

- The reaction-force pulsating action consists of quick pulses.
- Be sure to continue operating the brake lever and brake pedal even after the pulsating action has stopped.
- “ON” and “OFF” on the tool screen indicate when the brakes are being applied and released respectively.

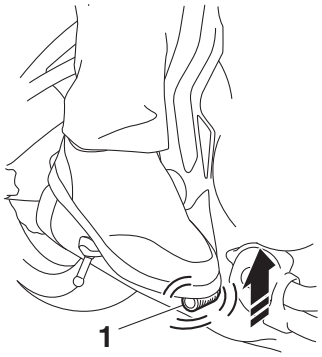

11. After the pulsating action has stopped in the brake pedal, it is generated in the brake lever and continues for a few seconds.

TIP

- The reaction-force pulsating action consists of quick pulses.
- “ON” and “OFF” on the tool screen indicate when the brakes are being applied and released respectively.

ECA18280

NOTICE

- **Check that the pulse is felt in the brake lever, brake pedal, and again in the brake lever, in this order.**
- **If the pulse is felt in the brake pedal before it is felt in the brake lever, check that the brake hoses and brake pipes are connected correctly to the hydraulic unit assembly.**
- **If the pulse is hardly felt in either the brake lever or brake pedal, check that the brake hoses and brake pipes are connected correctly to the hydraulic unit assembly.**

12. Turn the main switch to “OFF”.
13. Remove the Yamaha diagnostic tool from the Yamaha diagnostic tool coupler, and then install the protective cap.
14. Turn the main switch to “ON”.
15. Set the start/engine stop switch to “◯”.
16. Check for brake fluid leakage around the hydraulic unit.
    Brake fluid leakage → Replace the hydraulic unit, brake hoses, and related parts as a set.
17. If the operation of the hydraulic unit is normal, delete all of the fault codes.

EAS30202

CHECKING THE ABS WARNING LIGHT

After all checks and servicing are completed, ensure that the ABS warning light goes off by walking the vehicle at a speed of faster than 7 km/h (4.4 mph) or performing a trial run.

EAS20033

HANDLEBAR

Removing the handlebar

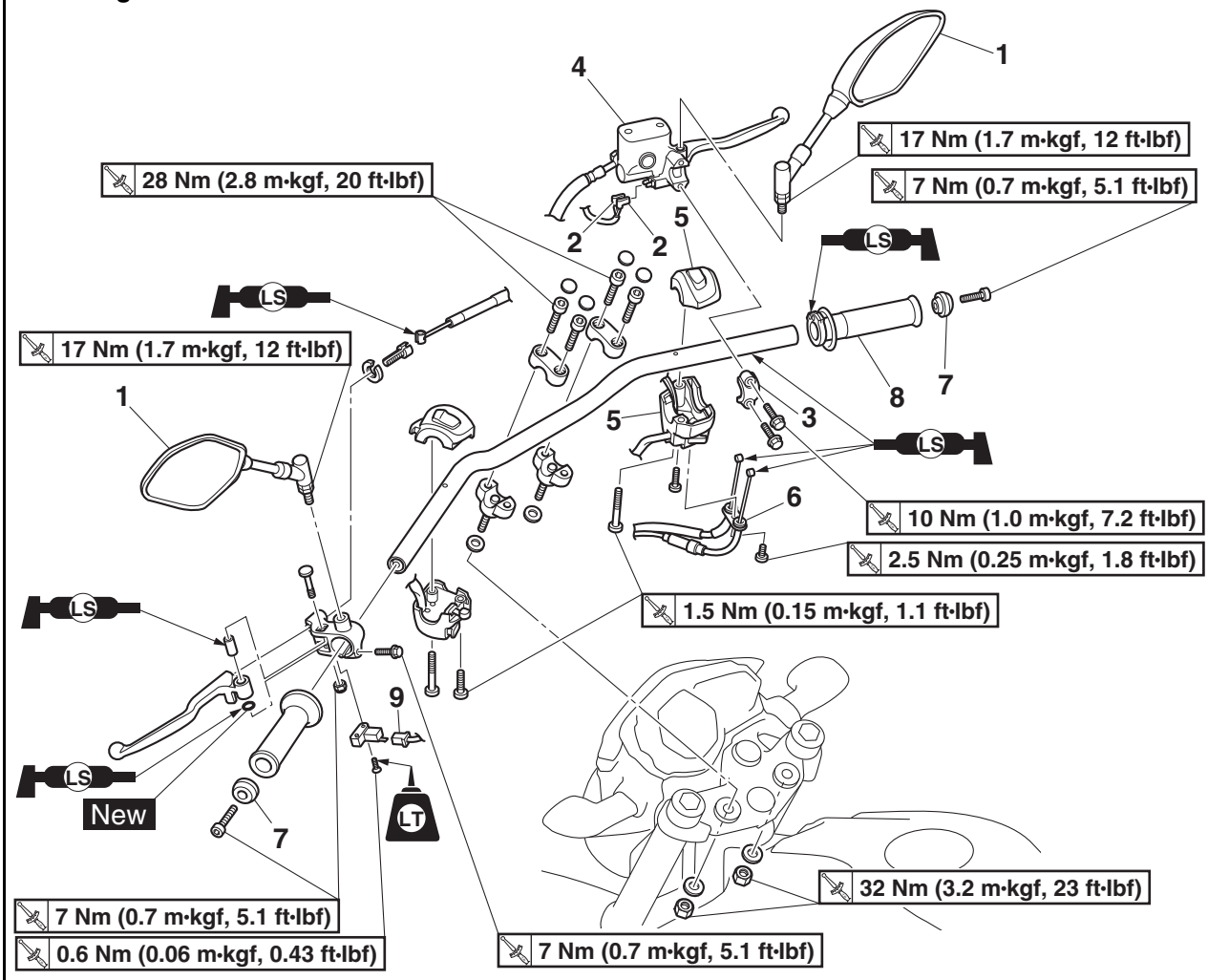

Order	Job/Parts to remove	Q'ty	Remarks
1	Rearview mirror	2	
2	Front brake light switch connector	2	Disconnect.
3	Front brake master cylinder holder	1	
4	Front brake master cylinder	1	
5	Handlebar switch (right)	1	
6	Throttle cable	2	Disconnect.
7	Grip end	2	
8	Throttle grip	1	
9	Clutch switch coupler	1	Disconnect.

Removing the handlebar

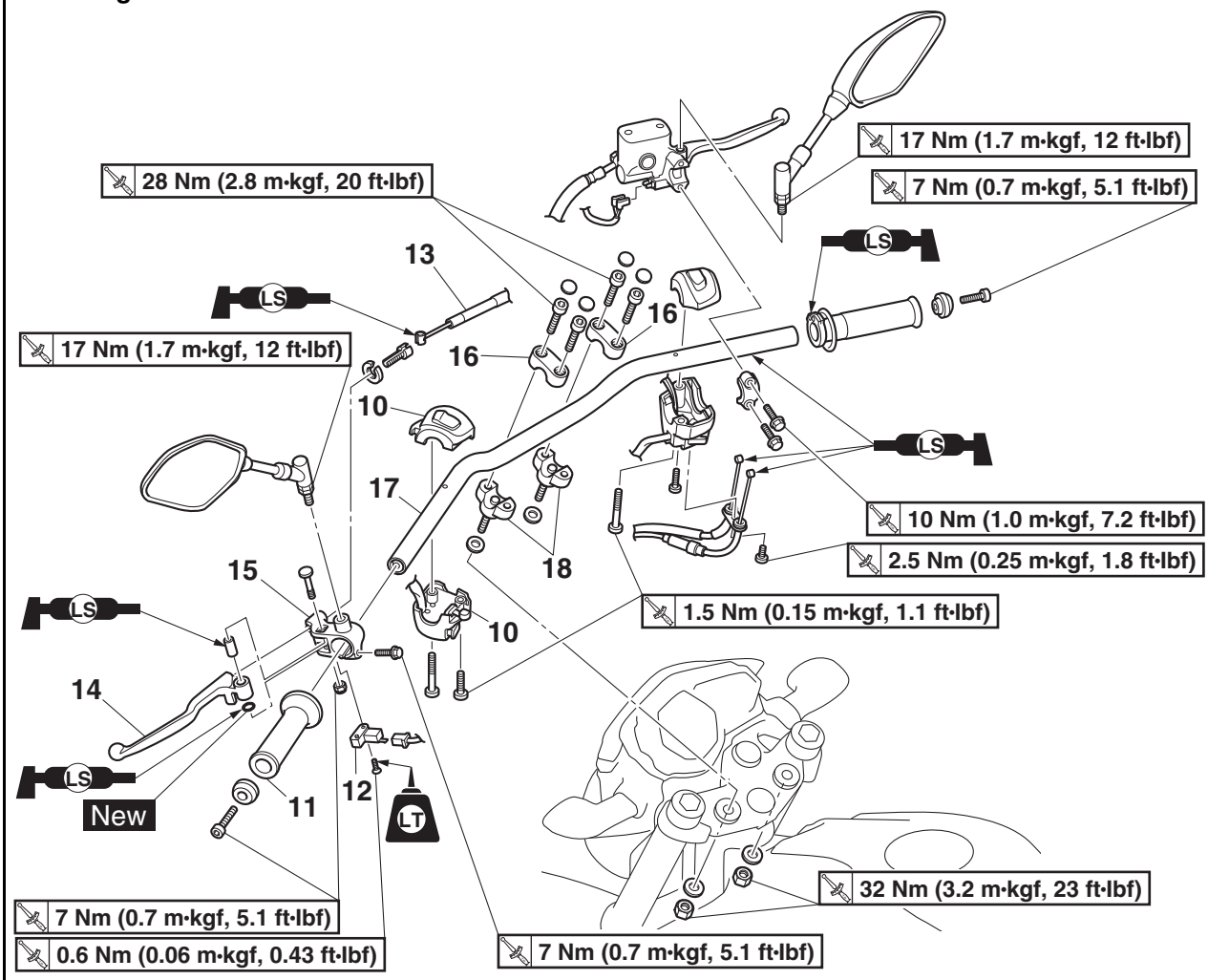

Order	Job/Parts to remove	Q'ty	Remarks
10	Handlebar switch (left)	1	
11	Handlebar grip	1	
12	Clutch switch	1	
13	Clutch cable	1	Disconnect.
14	Clutch lever	1	
15	Clutch lever holder	1	
16	Upper handlebar holder	2	
17	Handlebar	1	
18	Lower handlebar holder	2	

EAS30203
REMOVING THE HANDLEBAR
1. Stand the vehicle on a level surface.

EWA13120
WARNING
Securely support the vehicle so that there is no danger of it falling over.

2. Remove:
   - Grip end

TIP
While holding the grip end, loosen the grip end bolt.

3. Remove:
   - Handlebar grip “1”

TIP
Blow compressed air between the handlebar and the handlebar grip, and gradually push the grip off the handlebar.

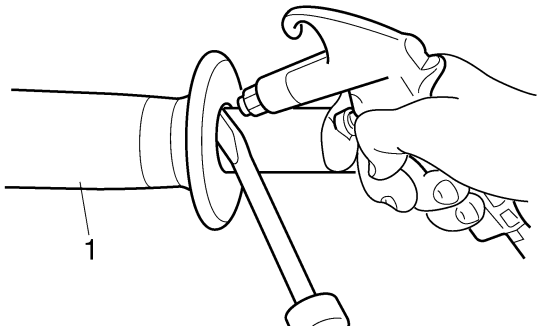

EAS30204
CHECKING THE HANDLEBAR
1. Check:
   - Handlebar
     Bends/cracks/damage → Replace.

EWA13690
WARNING
Do not attempt to straighten a bent handlebar as this may dangerously weaken it.

EAS30205
INSTALLING THE HANDLEBAR
1. Stand the vehicle on a level surface.

EWA13120
WARNING
Securely support the vehicle so that there is no danger of it falling over.

2. Install:
   - Lower handlebar holder “1” (temporarily tighten)
   - Handlebar “2”
   - Upper handlebar holders “3”

Upper handlebar holder bolt
28 Nm (2.8 m·kgf, 20 ft·lbf)

ECA18300
NOTICE
First, tighten the bolts on the front side of the handlebar holder, and then on the rear side.

TIP
- The upper handlebar holders should be installed with the arrow marks “a” facing forward.
- Align the punch mark “b” on the handlebar with the left side upper surface of the right lower handlebar holder.

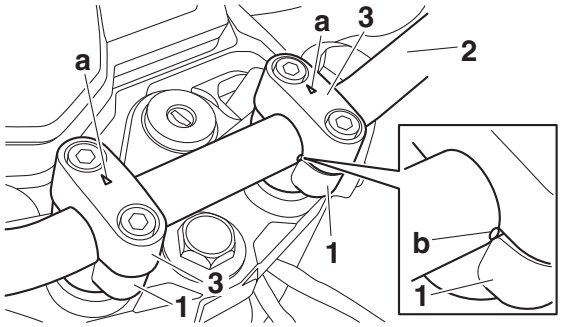

3. Tighten:
   - Lower handlebar holder nuts

Lower handlebar holder nut
32 Nm (3.2 m·kgf, 23 ft·lbf)

4. Install:
   - Clutch lever holder “1”
   - Clutch lever
   - Clutch switch

Clutch lever holder pinch bolt
7 Nm (0.7 m·kgf, 5.1 ft·lbf)
Clutch lever pivot nut
7 Nm (0.7 m·kgf, 5.1 ft·lbf)
Clutch switch screw
0.6 Nm (0.06 m·kgf, 0.43 ft·lbf)
LOCTITE®

TIP
- Align the projection “a” on the clutch lever holder with the punch mark “b” on the handlebar.
- Fit the projection “c” on the bottom of the bolt head into the slot “d” in the bolt hole in the clutch lever holder.

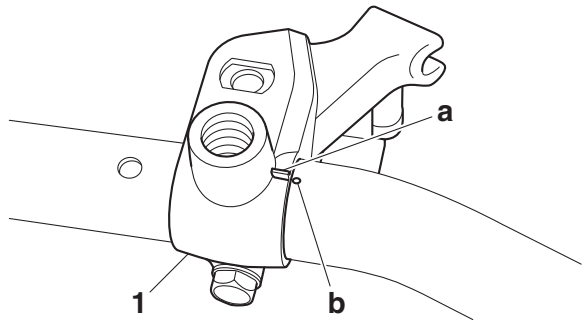

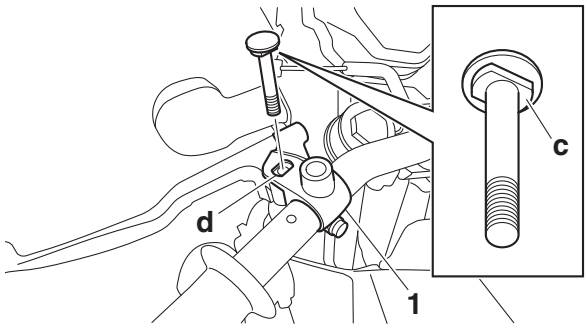

5. Connect:
   - Clutch cable

TIP

Lubricate the end of the clutch cable with a thin coat of lithium-soap-based grease.

6. Install:
   - Handlebar switch (left) "1"

	Handlebar switch screw (left) **1.5 Nm (0.15 m·kgf, 1.1 ft·lbf)**

TIP

- Align the projection "a" on the left handlebar switch with the hole "b" in the handlebar.
- First, tighten the front screw, then tighten the rear screw.

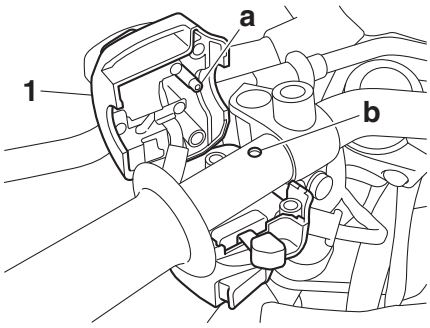

7. Install:
   - Handlebar grip "1"
   - Grip end (left) "2"

	Grip end bolt **7 Nm (0.7 m·kgf, 5.1 ft·lbf)**

▼▼▼▼▼▼▼▼▼▼▼▼▼▼▼▼▼▼▼▼▼▼▼▼▼▼▼▼▼▼▼▼▼▼

a. Apply a thin coat of rubber adhesive onto the end of the handlebar.
b. Slide the handlebar grip over the end of the handlebar.
c. Wipe off any excess rubber adhesive with a clean rag.

EWA13700

WARNING

Do not touch the handlebar grip until the rubber adhesive has fully dried.

TIP

- Align the projection "a" on the grip end with the slot "b" in the handlebar weight.
- While holding the grip end, tighten the grip end bolt.
- There should be 2–5 mm (0.08–0.20 in) of clearance "c" between the handlebar grip and the grip end.

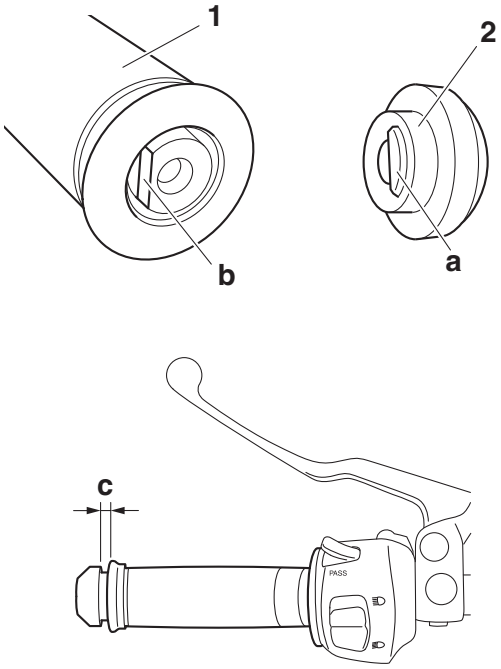

▲▲▲▲▲▲▲▲▲▲▲▲▲▲▲▲▲▲▲▲▲▲▲▲▲▲▲▲▲▲▲▲▲▲

8. Install:
   - Front brake master cylinder "1"
   - Front brake master cylinder holder "2"

	Front brake master cylinder holder bolt **10 Nm (1.0 m·kgf, 7.2 ft·lbf)**

TIP

- Install the brake master cylinder holder with the "UP" mark "a" facing up.

- Align the mating surfaces of the front brake master cylinder holder with the punch mark “b” on the handlebar.
- First, tighten the upper bolt, then tighten the lower bolt.

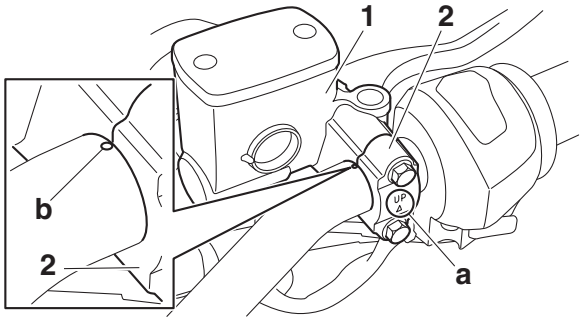

9. Install:
   - Throttle grip “1”
   - Throttle cables
   - Handlebar switch (right) “2”

Handlebar switch screw (right)
1.5 Nm (0.15 m·kgf, 1.1 ft·lbf)
Throttle cable guide screw (handlebar side)
2.5 Nm (0.25 m·kgf, 1.8 ft·lbf)

TIP

- Lubricate the inside of the throttle grip with a thin coat of lithium-soap-based grease and install it onto the handlebar.
- Route the throttle cables through the slots in the throttle grip, and then install the cables.
- Align the projection “a” on the right handlebar switch with the hole “b” on the handlebar.
- First, tighten the front screw, then tighten the rear screw.

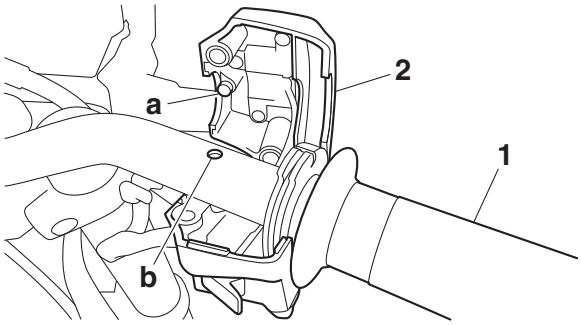

10. Install:
   - Grip end (right) “1”

Grip end bolt
7 Nm (0.7 m·kgf, 5.1 ft·lbf)

TIP

- Align the projection “a” on the grip end with the slot “b” in the handlebar weight.
- While holding the grip end, tighten the grip end bolt.
- There should be 1–5 mm (0.04–0.20 in) of clearance “c” between the throttle grip and the right grip end.

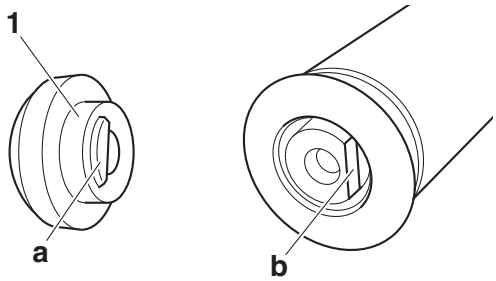

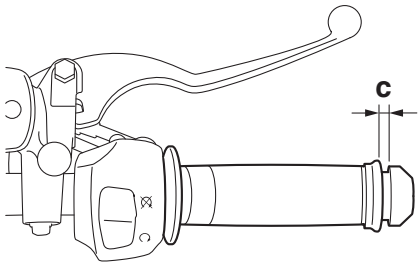

11. Check:
   - Cable routing

TIP

Make sure the main switch lead, brake hose, throttle cables, clutch cable, and handlebar switch leads are routed properly. Refer to “CABLE ROUTING” on page 2-43.

12. Adjust:
   - Clutch lever free play
     Refer to “ADJUSTING THE CLUTCH LEVER FREE PLAY” on page 3-12.

Clutch lever free play
10.0–15.0 mm (0.39–0.59 in)

13. Adjust:
   - Throttle grip free play
     Refer to “CHECKING THE THROTTLE GRIP OPERATION” on page 3-26.

Throttle grip free play
3.0–5.0 mm (0.12–0.20 in)

EAS20034

FRONT FORK

Removing the front fork legs

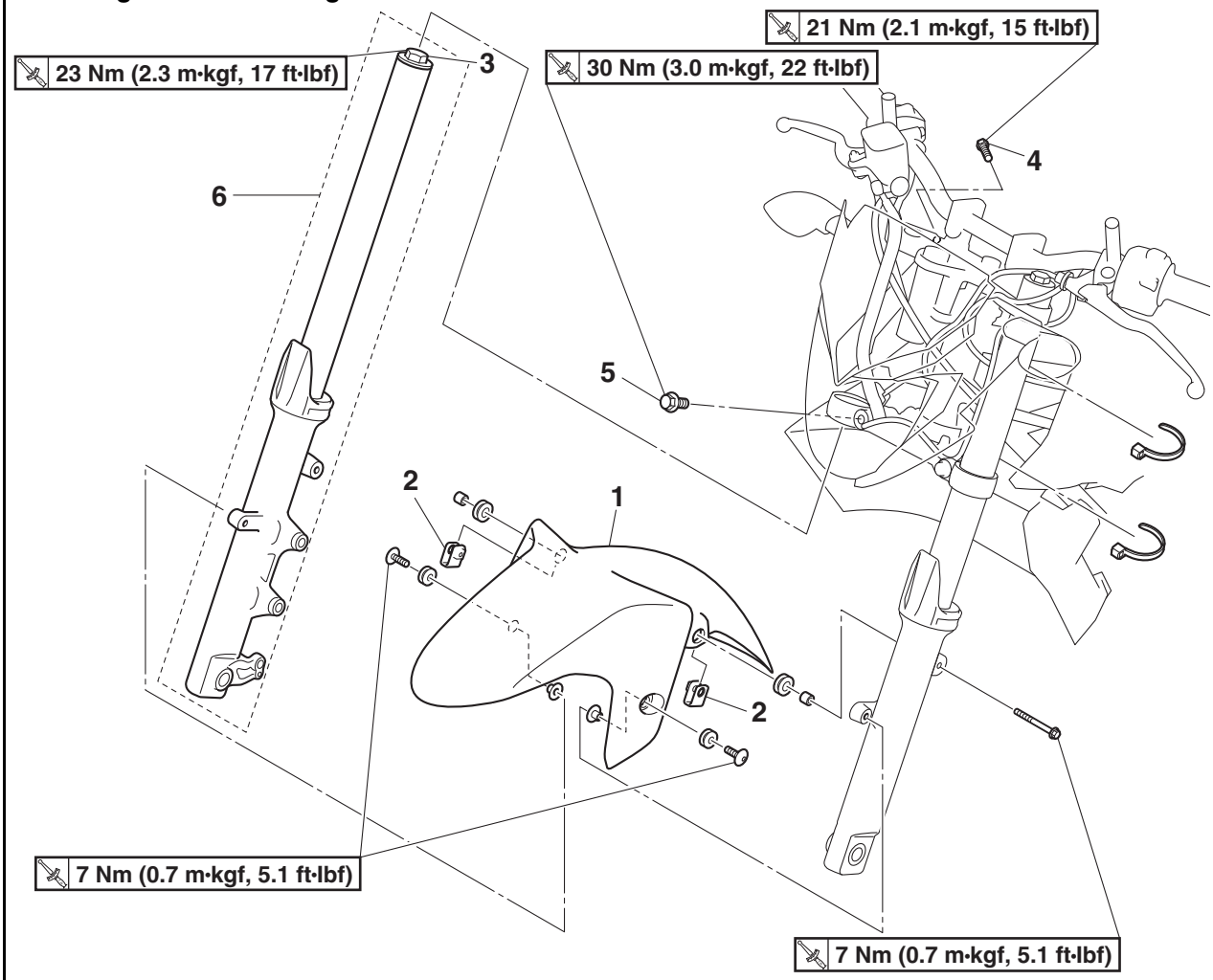

Order	Job/Parts to remove	Q'ty	Remarks
			The following procedure applies to both of the front fork legs.
	Front wheel		Refer to "FRONT WHEEL" on page 4-18.
1	Front fender	1	
2	Front fender bracket	2	
3	Front fork cap bolt	1	Loosen.
4	Upper bracket pinch bolt	1	Loosen.
5	Lower bracket pinch bolt	1	Loosen.
6	Front fork leg	1	

Disassembling the front fork legs

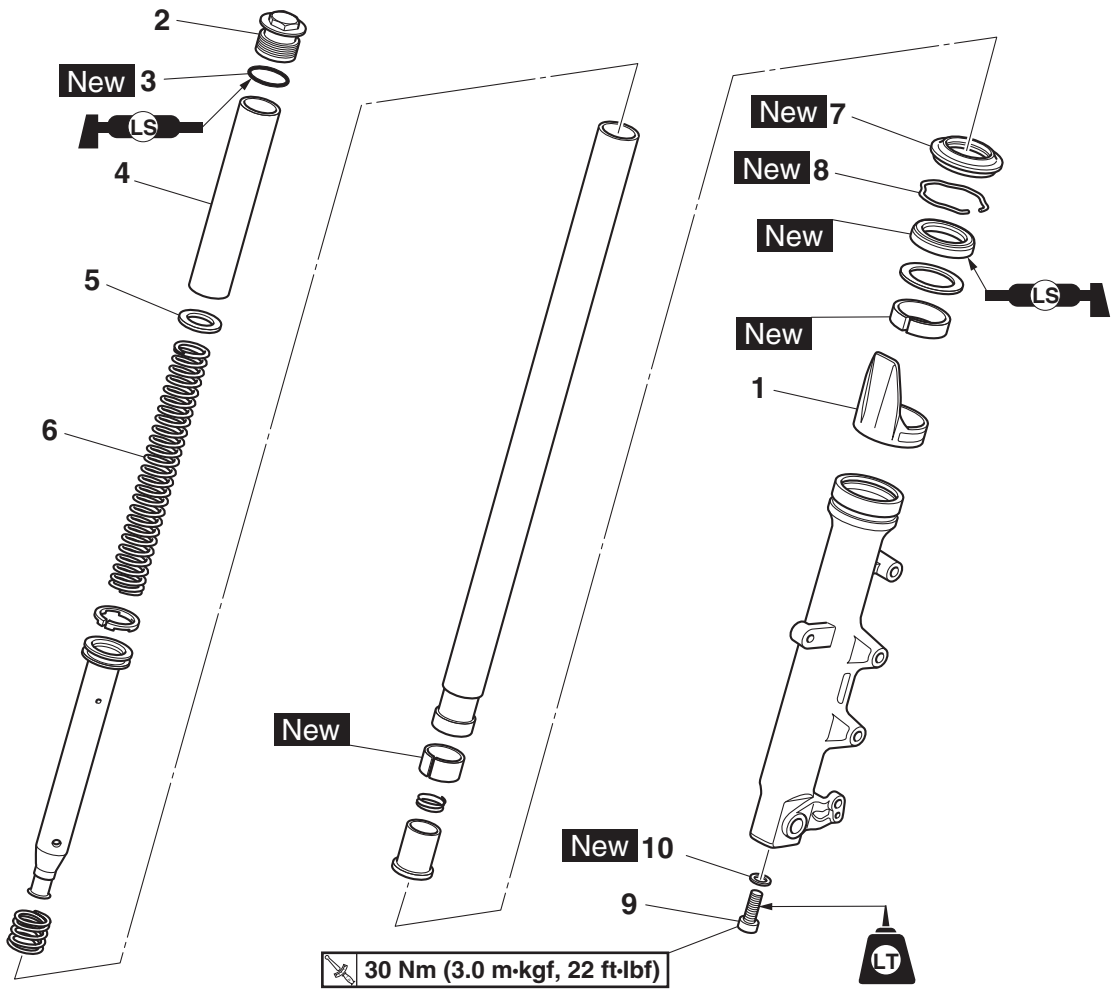

Order	Job/Parts to remove	Q'ty	Remarks
			The following procedure applies to both of the front fork legs.
1	Protector	1	Removing the protector only when necessary.
2	Front fork cap bolt	1	
3	O-ring	1	
4	Spacer	1	
5	Spring seat	1	
6	Fork spring	1	
7	Dust seal	1	
8	Oil seal clip	1	
9	Front fork damper rod bolt	1	
10	Copper washer	1	

Disassembling the front fork legs

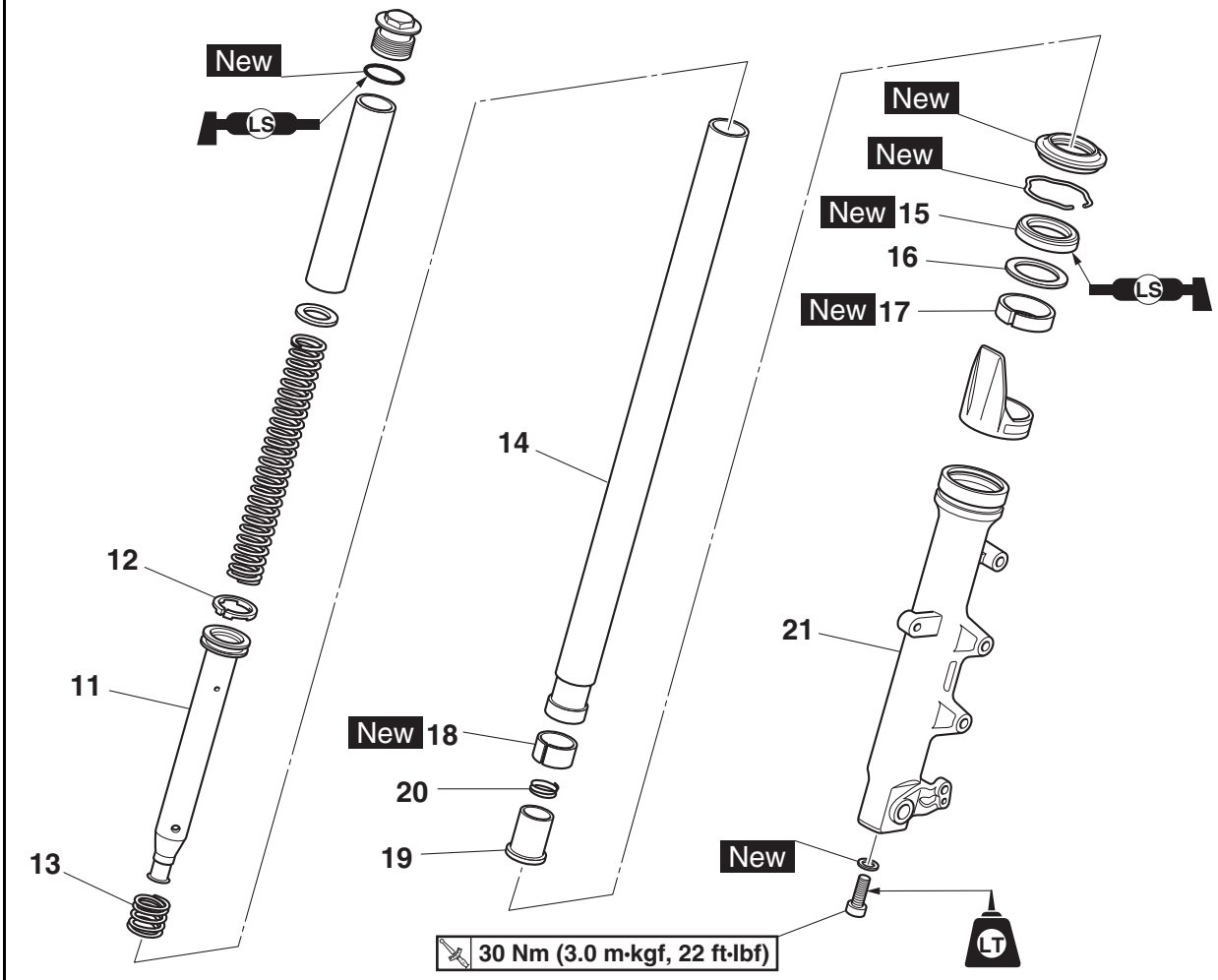

Order	Job/Parts to remove	Q'ty	Remarks
11	Damper rod	1	
12	Damper rod ring	1	
13	Rebound spring	1	
14	Inner tube	1	
15	Oil seal	1	
16	Washer	1	
17	Outer tube bushing	1	
18	Inner tube bushing	1	
19	Oil flow stopper	1	
20	Spring	1	
21	Outer tube	1	

EAS30206
REMOVING THE FRONT FORK LEGS

The following procedure applies to both of the front fork legs.

1. Stand the vehicle on a level surface.

EWA13120
WARNING

Securely support the vehicle so that there is no danger of it falling over.

2. Loosen:
   - Front fork cap bolt “1”
   - Upper bracket pinch bolt “2”
   - Lower bracket pinch bolt “3”

EWA13640
WARNING

Before loosening the upper and lower bracket pinch bolts, support the front fork leg.

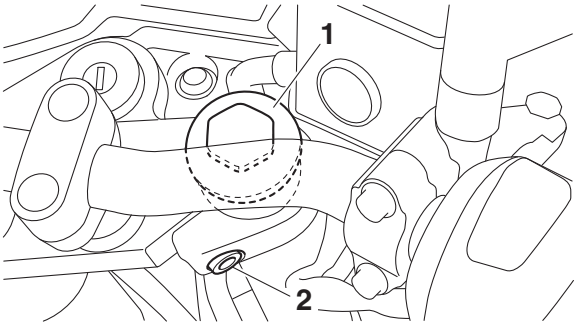

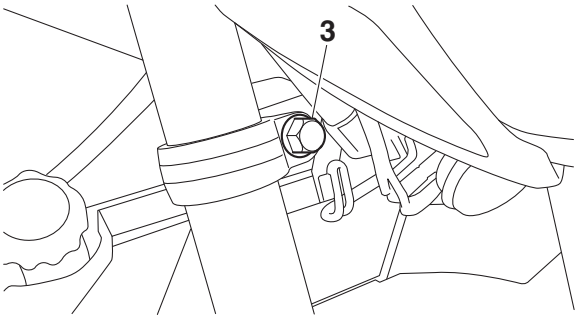

EAS30207
DISASSEMBLING THE FRONT FORK LEGS

The following procedure applies to both of the front fork legs.

1. Drain:
   - Fork oil

TIP

Stroke the outer tube several times while draining the fork oil.

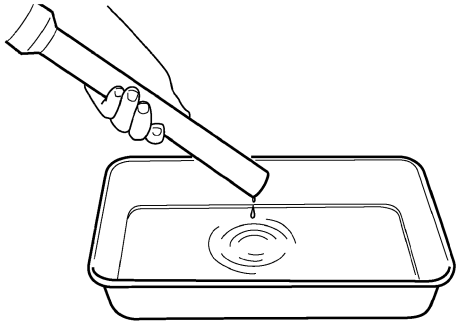

2. Remove:
   - Dust seal “1”
   - Oil seal clip “2”
     (with a flathead screwdriver)

ECA14180
NOTICE

Do not scratch the inner tube.

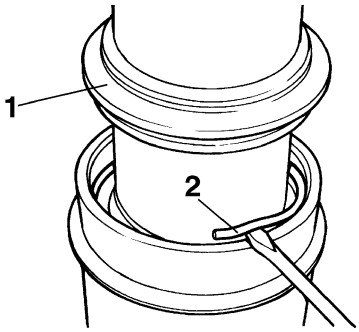

3. Remove:
   - Front fork damper rod bolt “1”
   - Copper washer

TIP

While holding the damper rod with the damper rod holder “2” and T-handle “3”, loosen the front fork damper rod bolt.

Damper rod holder
90890-01460
T-handle
90890-01326
T-handle 3/8" drive 60 cm long
YM-01326

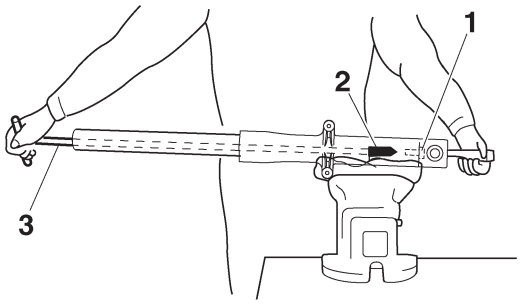

4. Remove:
   - Inner tube

▼▼▼▼▼▼▼▼▼▼▼▼▼▼▼▼▼▼▼▼▼▼▼▼▼▼▼▼▼▼▼▼▼▼▼▼

a. Hold the front fork leg horizontally.
b. Securely clamp the brake caliper bracket in a vise with soft jaws.
c. Separate the inner tube from the outer tube by pulling the inner tube forcefully but carefully.

ECA14190

NOTICE

- **Excessive force will damage the oil seal and bushing. A damaged oil seal or bushing must be replaced.**
- **Avoid bottoming the inner tube into the outer tube during the above procedure, as the oil flow stopper will be damaged.**

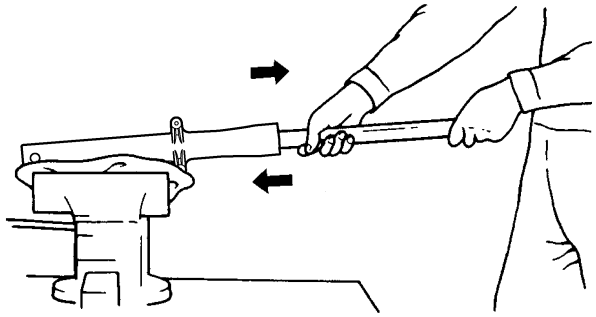

▲▲▲▲▲▲▲▲▲▲▲▲▲▲▲▲▲▲▲▲▲▲▲▲▲▲▲▲▲▲▲▲▲▲▲▲

EAS30208

CHECKING THE FRONT FORK LEGS

The following procedure applies to both of the front fork legs.

1. Check:
   - Inner tube
   - Outer tube
     Bends/damage/scratches → Replace.

EWA13650

WARNING

Do not attempt to straighten a bent inner tube as this may dangerously weaken it.

2. Measure:
   - Fork spring free length “a”
     Out of specification → Replace.

	Fork spring free length **297.8 mm (11.72 in)** **Limit** **292.0 mm (11.50 in)**

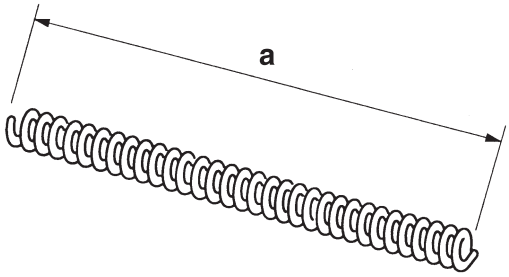

3. Check:
   - Damper rod
     Damage/wear → Replace.
     Obstruction → Blow out all of the oil passages with compressed air.
   - Oil flow stopper
     Damage → Replace.

ECA20550

NOTICE

When disassembling and assembling the front fork leg, do not allow any foreign material to enter the front fork.

EAS30209

ASSEMBLING THE FRONT FORK LEGS

The following procedure applies to both of the front fork legs.

EWA13660

WARNING

- **Make sure the oil levels in both front fork legs are equal.**
- **Uneven oil levels can result in poor handling and a loss of stability.**

TIP

- When assembling the front fork leg, be sure to replace the following parts:
  –Inner tube bushing
  –Outer tube bushing
  –Oil seal
  –Oil seal clip
  –Dust seal
  –O-ring
  –Copper washer
- Before assembling the front fork leg, make sure all of the components are clean.

1. Install:
   - Oil flow stopper spring “1”
   - Oil flow stopper “2”
   - Damper rod ring “3”
   - Rebound spring
   - Damper rod “4”
   - Inner tube bushing “5” New

▼▼▼▼▼▼▼▼▼▼▼▼▼▼▼▼▼▼▼▼▼▼▼▼▼▼▼▼▼▼▼▼▼▼▼▼

a. Install the oil flow stopper spring into the oil flow stopper.

TIP

Make sure that the oil flow stopper spring is installed securely into the grooves “a” in the oil flow stopper.

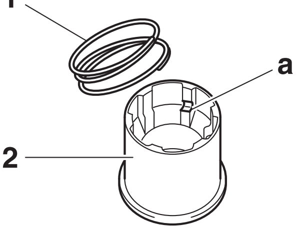

b. Install the damper rod ring onto the damper rod.

TIP

Fit the damper rod ring into the damper rod groove so that the side of the ring with the projections is facing in the direction shown in the illustration.

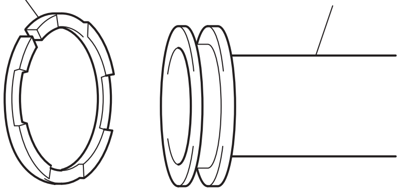

c. Install the damper rod and rebound spring to the inner tube.

TIP

Allow the damper rod to slide slowly down the inner tube until it protrudes from the bottom of the inner tube. Be careful not to damage the inner tube.

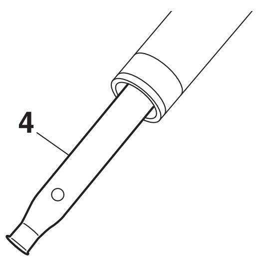

d. Install the oil flow stopper and inner tube bushing onto the inner tube “6”.

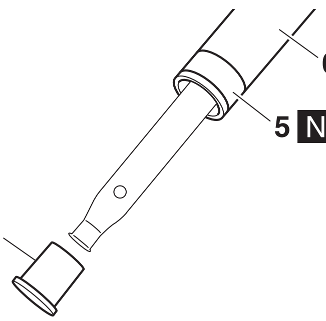

▲▲▲▲▲▲▲▲▲▲▲▲▲▲▲▲▲▲▲▲▲▲▲▲▲▲▲▲▲▲▲▲▲▲▲▲

2. Lubricate:
   - Inner tube’s outer surface

	Recommended oil **Yamaha fork oil 10WT**

3. Install:
   - Inner tube
     (in the outer tube)
4. Install:
   - Copper washer New
   - Front fork damper rod bolt
5. Tighten:
   - Front fork damper rod bolt “1”

	Front fork damper rod bolt **30 Nm (3.0 m·kgf, 22 ft·lbf)** **LOCTITE®**

TIP

While holding the damper rod assembly with the damper rod holder “2” and T-handle “3”, tighten the front fork damper rod bolt.

	Damper rod holder **90890-01460** **T-handle** **90890-01326** **T-handle 3/8" drive 60 cm long** **YM-01326**

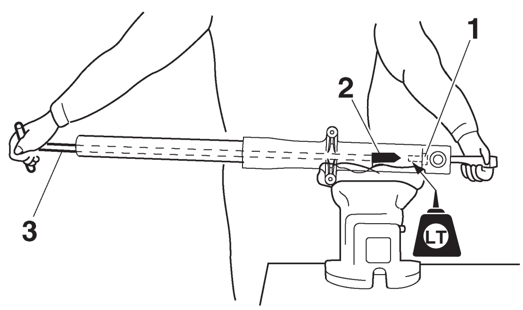

6. Install:
   - Outer tube bushing “1” New
   - Washer “2”
     (with the fork seal driver attachment “3” and fork seal driver weight “4”)

Fork seal driver weight
90890-01367
Replacement hammer
YM-A9409-7
Fork seal driver attachment (ø41)
90890-01381
Replacement 41 mm
YM-A5142-2

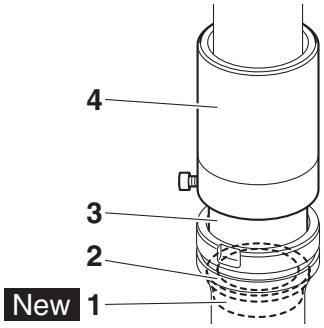

7. Install:
   - Oil seal “1” New
     (with the fork seal driver attachment “2” and fork seal driver weight “3”)

ECA14220

NOTICE

Make sure the numbered side of the oil seal faces up.

TIP

- Lubricate the outer surface of the inner tube with fork oil.
- Before installing the oil seal, cover the top of the front fork leg with a plastic bag to protect the oil seal during installation.

Fork seal driver weight
90890-01367
Replacement hammer
YM-A9409-7
Fork seal driver attachment (ø41)
90890-01381
Replacement 41 mm
YM-A5142-2

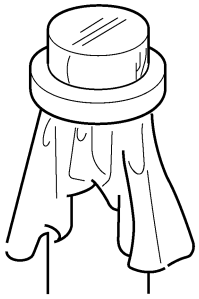

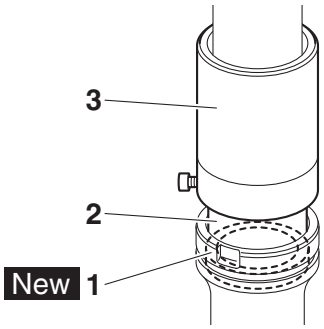

8. Install:
   - Oil seal clip “1” New

TIP

Adjust the oil seal clip so that it fits into the outer tube’s groove.

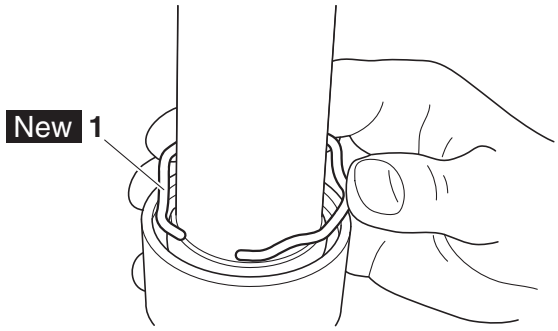

9. Install:
   - Dust seal “1” New
     (with the fork seal driver weight “2”)

Fork seal driver weight
90890-01367
Replacement hammer
YM-A9409-7

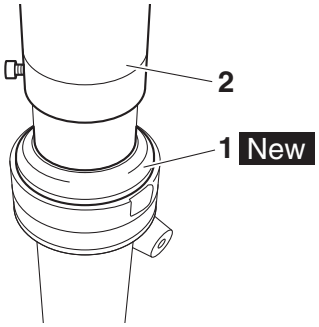

10.Fill:
- Front fork leg
  (with the specified amount of the recommended fork oil)

Quantity **487.0 cm³ (16.47 US oz, 17.18 Imp.oz)** **Recommended oil** **Fork oil 10W or equivalent**

11.Measure:
- Front fork leg oil level "a"
  (from the top of the inner tube, with the outer tube fully compressed and without the fork spring)
  Out of specification → Correct.

Level **121.0 mm (4.8 in)**

TIP
- While filling the front fork leg, keep it upright.
- After filling, slowly pump the front fork leg up and down to distribute the fork oil.

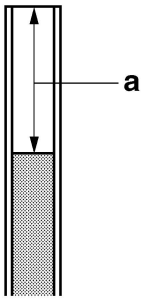

12.Install:
- Fork spring
- Spring seat
- Spacer
- Front fork cap bolt
  (along with the O-ring New)

TIP
- Temporarily tighten the front fork cap bolt.
- Tighten the front fork cap bolt specified torque, when installing the front fork with lower bracket.

EAS30210
INSTALLING THE FRONT FORK LEGS

The following procedure applies to both of the front fork legs.

1. Install:
   - Front fork leg "1"
     Temporarily tighten the lower bracket pinch bolt "2".

Installed length (lower bracket to end of inner tube) "b" **241.0 mm (9.49 in)**

TIP

Put the mark "a" to specification length, and then install the front fork legs to align the mark "a" with top of lower bracket "3".

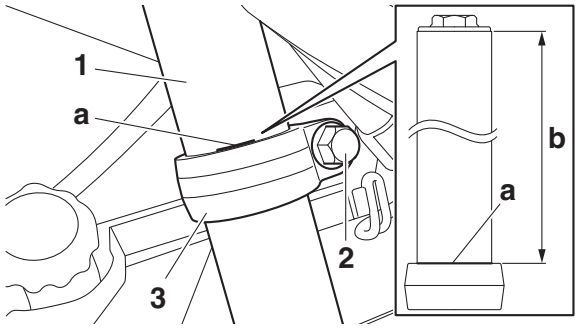

2. Tighten:
   - Lower bracket pinch bolt
   - Front fork cap bolt
   - Upper bracket pinch bolt

Lower bracket pinch bolt **30 Nm (3.0 m·kgf, 22 ft·lbf)** **Front fork cap bolt** **23 Nm (2.3 m·kgf, 17 ft·lbf)** **Upper bracket pinch bolt** **21 Nm (2.1 m·kgf, 15 ft·lbf)**

3. Install:
   - Front fender bracket "1"
   - Front fender

Front fender bolt (rear) **7 Nm (0.7 m·kgf, 5.1 ft·lbf)** **Front fender bolt (front)** **7 Nm (0.7 m·kgf, 5.1 ft·lbf)**

TIP

Align the edge “a” of each front fender bracket with the stopper “b” on the front fork “2”. Make sure to fit the front fender bracket under the stopper on the front fork.

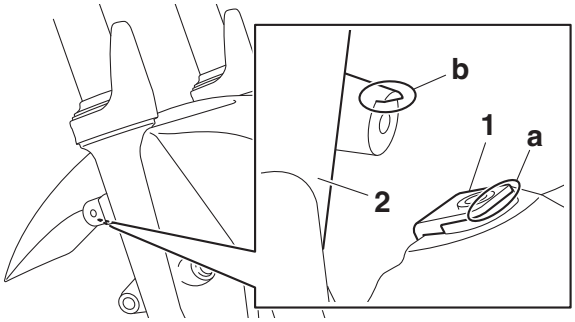

EAS20035

STEERING HEAD

Removing the upper bracket and lower bracket

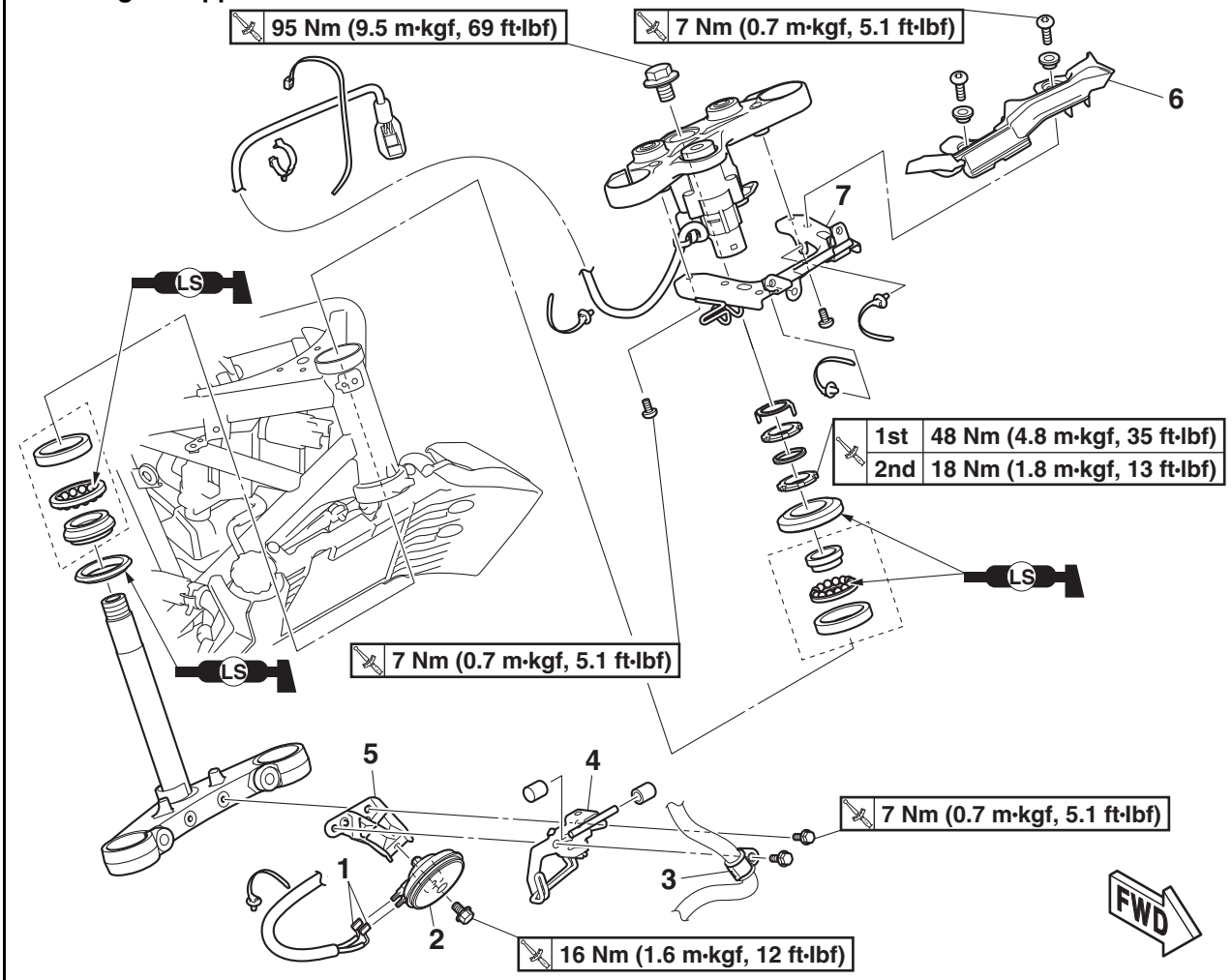

Order	Job/Parts to remove	Q'ty	Remarks
	Headlight assemblies		Refer to "GENERAL CHASSIS (4)" on page 4-12.
	Front wheel		Refer to "FRONT WHEEL" on page 4-18.
	Handlebar		Refer to "HANDLEBAR" on page 4-69.
	Front fork legs		Refer to "FRONT FORK" on page 4-74.
	Fuel tank		Refer to "FUEL TANK" on page 7-1.
1	Horn connector	2	Disconnect.
2	Horn	1	
3	Brake hose joint	1	
4	Lower headlight bracket	1	
5	Horn bracket	1	
6	Meter support	1	
7	Cable guide (left)	1	

Removing the upper bracket and lower bracket

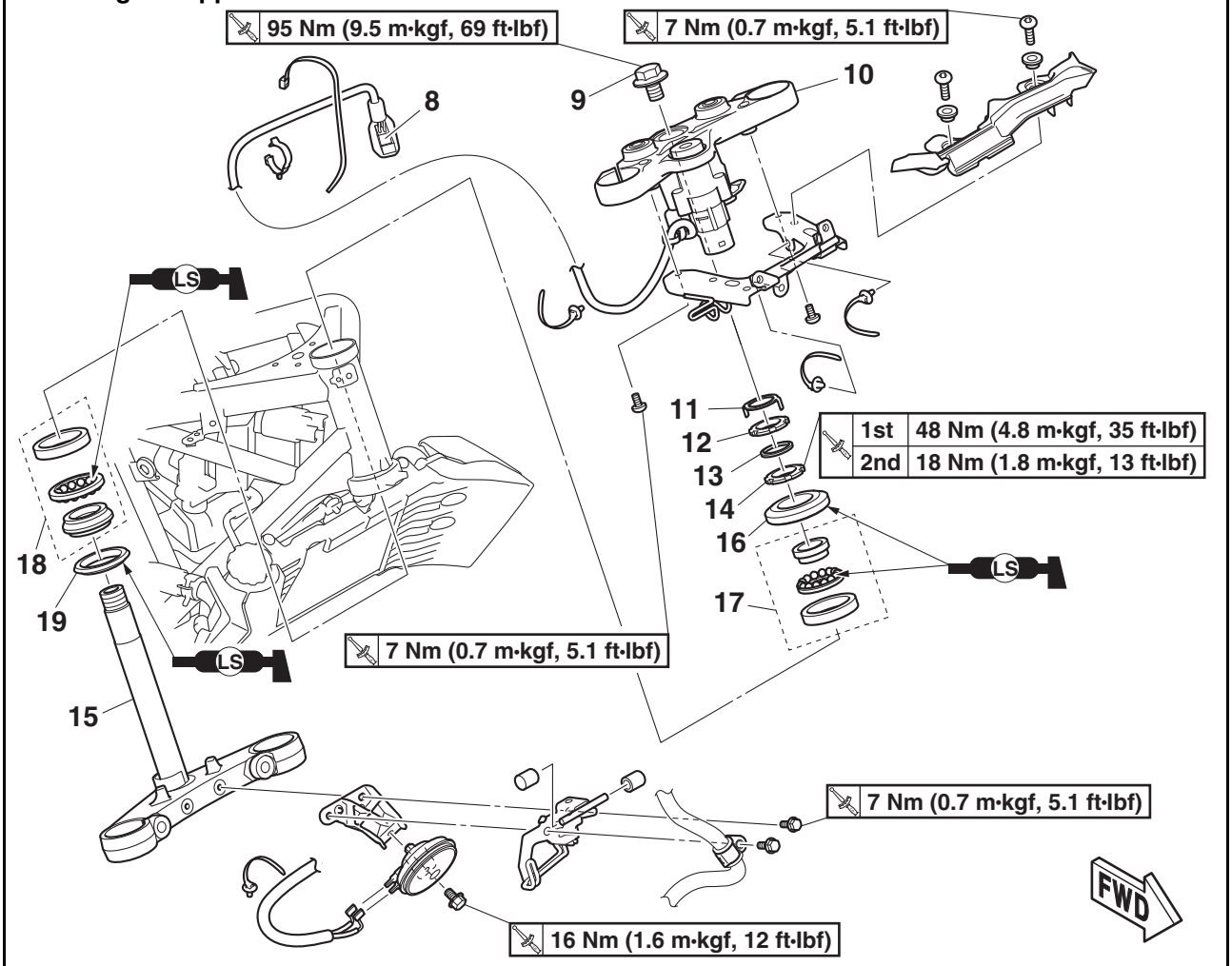

Order	Job/Parts to remove	Q'ty	Remarks
8	Main switch coupler	1	Disconnect.
9	Steering stem bolt	1	
10	Upper bracket	1	
11	Lock washer	1	
12	Upper ring nut	1	
13	Rubber washer	1	
14	Lower ring nut	1	
15	Lower bracket	1	
16	Bearing cover	1	
17	Upper bearing	1	
18	Lower bearing	1	
19	Lower bearing dust seal	1	

EAS30213
REMOVING THE LOWER BRACKET
1. Stand the vehicle on a level surface.

EWA13120
WARNING

Securely support the vehicle so that there is no danger of it falling over.

2. Remove:
 - Upper ring nut
 - Rubber washer
 - Lower ring nut "1"
 - Lower bracket

EWA13730
WARNING

Securely support the lower bracket so that there is no danger of it falling.

TIP

Remove the lower ring nut with the steering nut wrench "2".

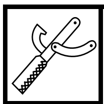

Steering nut wrench
90890-01403
Exhaust flange nut wrench
YU-A9472

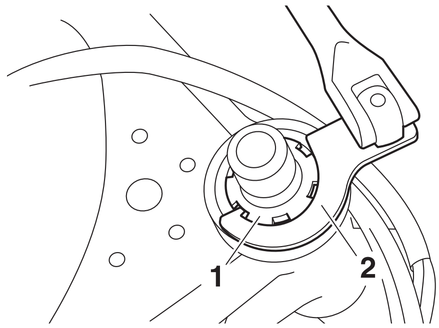

EAS30214
CHECKING THE STEERING HEAD
1. Wash:
 - Bearings
 - Bearing races

Recommended cleaning solvent
Kerosene

2. Check:
 - Bearings
 - Bearing races
 Damage/pitting → Replace the bearings and bearing races as a set.
3. Replace:
 - Bearings
 - Bearing races

▼▼▼▼▼▼▼▼▼▼▼▼▼▼▼▼▼▼▼▼▼▼▼▼▼▼▼▼▼▼▼▼▼▼

a. Remove the bearing races from the steering head pipe "1" with a long rod "2" and hammer.
b. Remove the bearing race "3" from the lower bracket with a floor chisel "4" and hammer.
c. Install a new dust seal and new bearing races.

ECA14270
NOTICE

If the bearing race is not installed properly, the steering head pipe could be damaged.

TIP

- Always replace the bearings and bearing races as a set.
- Whenever the steering head is disassembled, replace the dust seal.

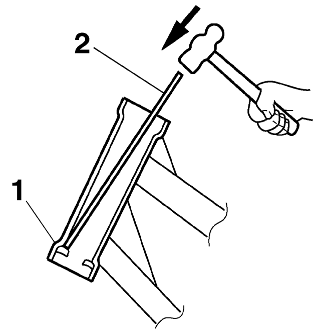

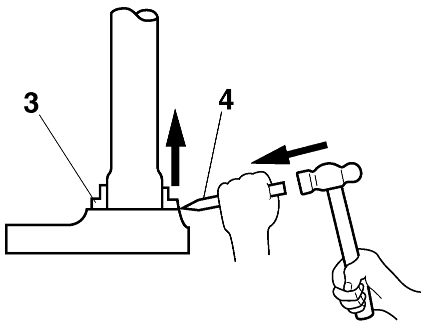

▲▲▲▲▲▲▲▲▲▲▲▲▲▲▲▲▲▲▲▲▲▲▲▲▲▲▲▲▲▲▲▲▲▲

4. Check:
 - Upper bracket
 - Lower bracket
 (along with the steering stem)
 Bends/cracks/damage → Replace.

EAS30216
INSTALLING THE STEERING HEAD
1. Lubricate:
 - Upper bearing
 - Lower bearing
 - Bearing cover
 - Lower bearing dust seal

	Recommended lubricant **Lithium-soap-based grease**

2. Install:
   - Lower ring nut “1”
   - Rubber washer “2”
   - Upper ring nut “3”
   - Lock washer “4”
     Refer to “CHECKING AND ADJUSTING THE STEERING HEAD” on page 3-18.

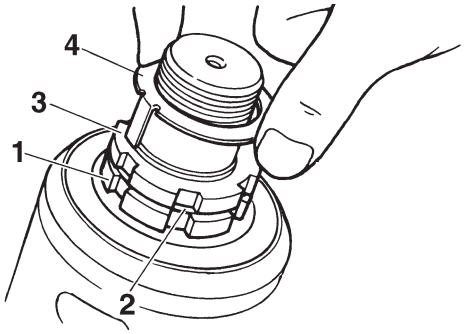

EAS20197

SWINGARM AND REAR SHOCK ABSORBER ASSEMBLY

Removing the swingarm and rear shock absorber assembly

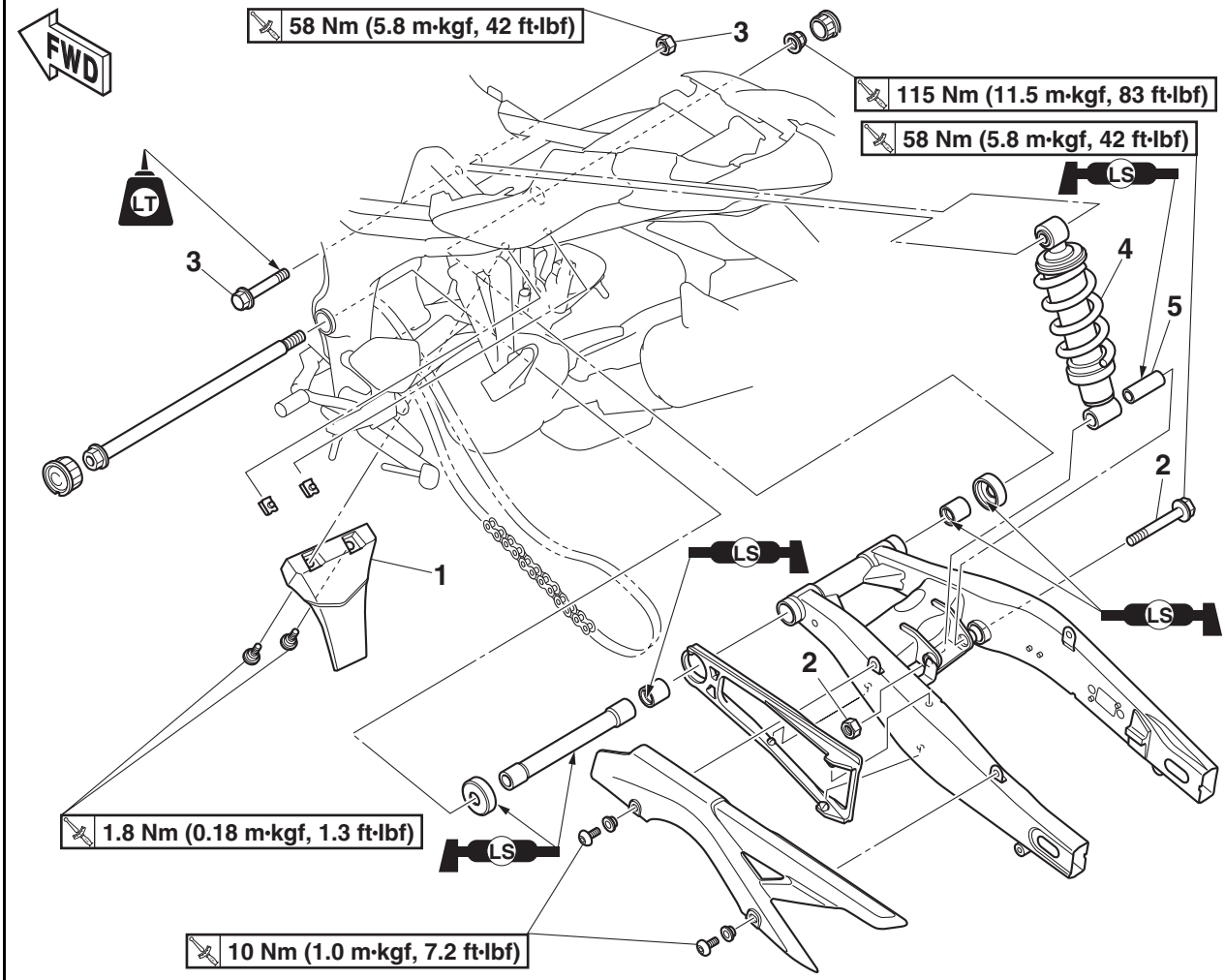

Order	Job/Parts to remove	Q'ty	Remarks
	Side panel assemblies		Refer to "GENERAL CHASSIS (2)" on page 4-3.
	Rear wheel		Refer to "REAR WHEEL" on page 4-26.
	Rear brake hose guide		Refer to "REAR BRAKE" on page 4-47.
1	Mudguard	1	
2	Rear shock absorber assembly nut/bolt (lower side)	1/1	
3	Rear shock absorber assembly nut/bolt (upper side)	1/1	
4	Rear shock absorber assembly	1	
5	Spacer	1	

Removing the swingarm and rear shock absorber assembly

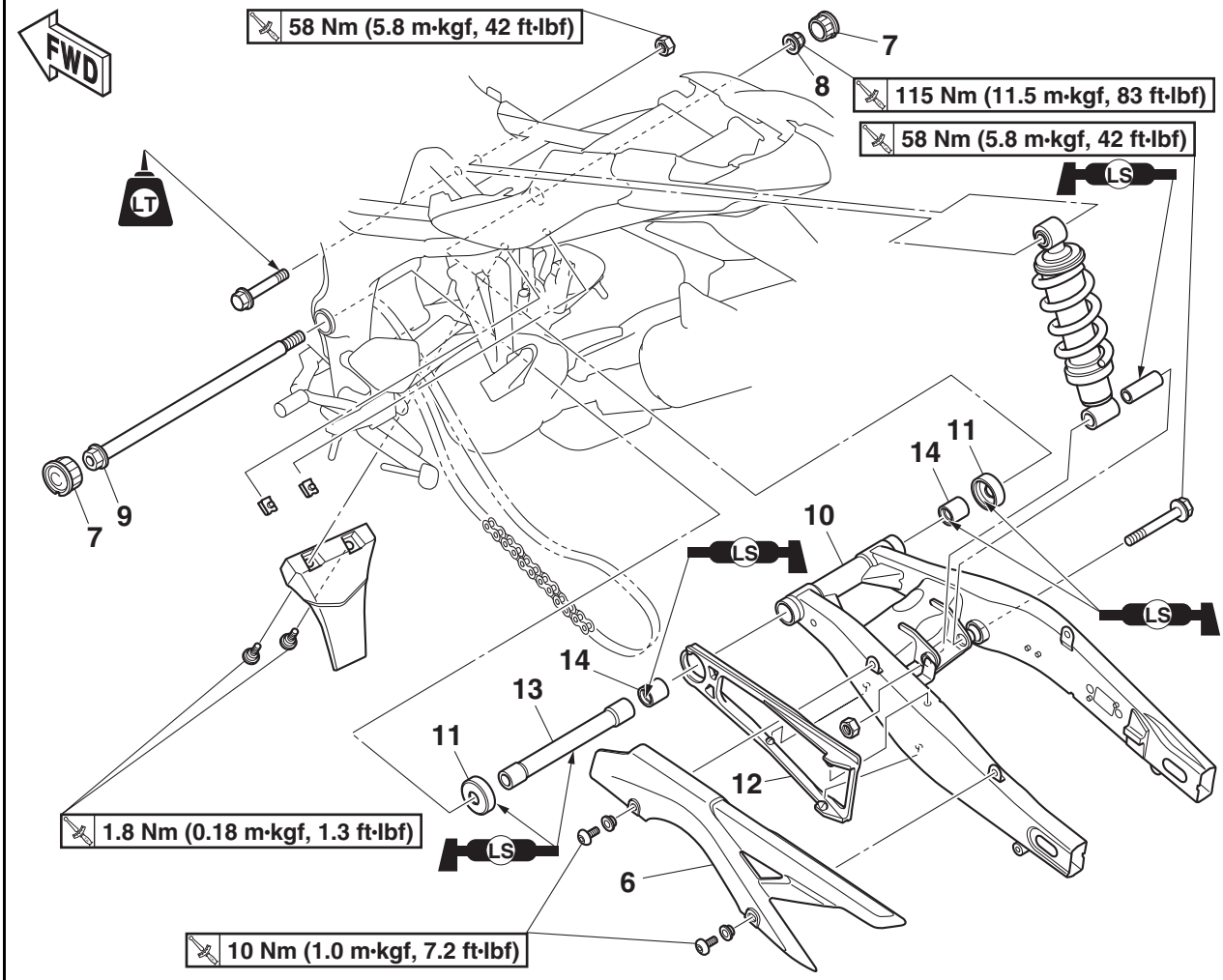

Order	Job/Parts to remove	Q'ty	Remarks
6	Drive chain guard	1	
7	Pivot shaft cap	2	
8	Pivot shaft nut	1	
9	Pivot shaft	1	
10	Swingarm	1	
11	Dust cover	2	
12	Drive chain guide	1	
13	Spacer	1	
14	Bearing	2	

EAS31304
REMOVING THE REAR SHOCK ABSORBER ASSEMBLY

1. Stand the vehicle on a level surface.

EWA13120
WARNING

Securely support the vehicle so that there is no danger of it falling over.

TIP

Place the vehicle on a suitable stand so that the rear wheel is elevated.

EAS31305
CHECKING THE REAR SHOCK ABSORBER ASSEMBLY

1. Check:
   - Rear shock absorber rod
     Bends/damage → Replace the rear shock absorber assembly.
   - Rear shock absorber assembly
     Oil leaks → Replace the rear shock absorber assembly.
   - Spring
     Damage/wear → Replace the rear shock absorber assembly.
   - Bolts
     Bends/damage/wear → Replace.

EAS31306
REMOVING THE SWINGARM

1. Stand the vehicle on a level surface.

EWA13120
WARNING

Securely support the vehicle so that there is no danger of it falling over.

TIP

Place the vehicle on a suitable stand so that the rear wheel is elevated.

2. Measure:
   - Swingarm side play
   - Swingarm vertical movement

▼▼▼▼▼▼▼▼▼▼▼▼▼▼▼▼▼▼▼▼▼▼▼▼▼▼▼▼▼▼▼▼▼▼▼▼

a. Measure the tightening torque of the pivot shaft nut.

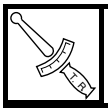	**Pivot shaft nut** **115 Nm (11.5 m·kgf, 83 ft·lbf)**

b. Check the swingarm side play “A” by moving the swingarm from side to side.
   If the swingarm has side-to-side play, check the spacer, bearings, and dust covers.
c. Check the swingarm vertical movement “B” by moving the swingarm up and down.
   If the swingarm vertical movement is not smooth or if there is binding, check the pivot shaft, spacer, bearings, and dust covers.

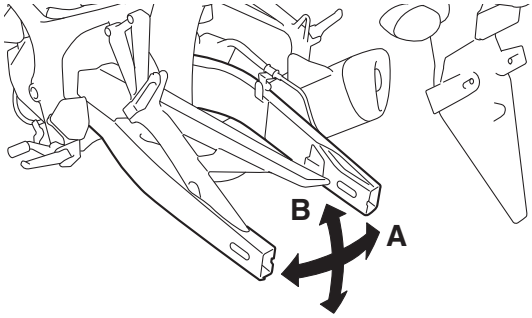

▲▲▲▲▲▲▲▲▲▲▲▲▲▲▲▲▲▲▲▲▲▲▲▲▲▲▲▲▲▲▲▲▲▲▲▲

3. Remove:
   - Swingarm

EAS31307
CHECKING THE SWINGARM

1. Check:
   - Swingarm
     Bends/cracks/damage → Replace.
2. Check:
   - Pivot shaft
     Roll the pivot shaft on a flat surface.
     Bends → Replace.

EWA13770
WARNING

Do not attempt to straighten a bent pivot shaft.

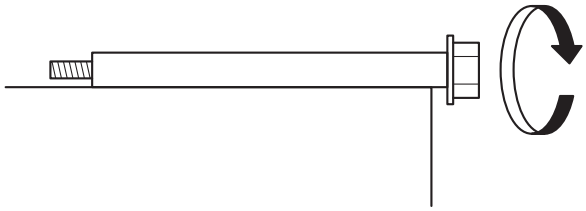

3. Wash:
   - Pivot shaft
   - Dust covers
   - Spacer
   - Bearings

	Recommended cleaning solvent **Kerosene**

4. Check:
   - Dust covers “1”
   - Spacer “2”
     Damage/scratches → Replace.

- Bearings “3”
  Damage/pitting → Replace.

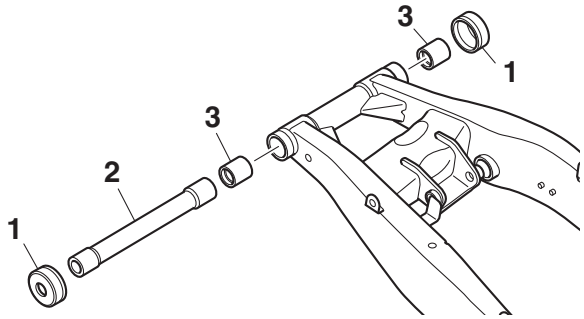

EAS31308
INSTALLING THE SWINGARM

1. Lubricate:
   - Spacer
   - Dust covers
   - Bearings

	Recommended lubricant **Lithium-soap-based grease**

2. Install:
   - Bearings “1”
   - Spacer “2”
   - Dust covers “3”
     (to the swingarm)

	Installed depth “a” **0.5–1.5 mm (0.02–0.06 in)**

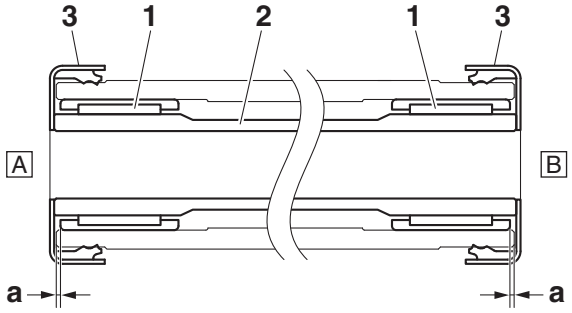

A. Left side
B. Right side

3. Install:
   The following procedure applies to both of the pivot shaft cap.
   - Pivot shaft cap “1”

TIP

Face the slot “a” in the pivot shaft cap downward so that it is positioned within the range shown in the illustration.

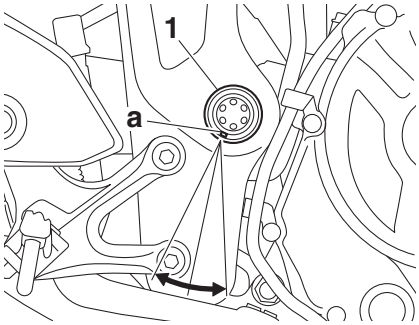

4. Adjust:
   - Drive chain slack
     Refer to “ADJUSTING THE DRIVE CHAIN SLACK” on page 3-17.

	Drive chain slack **35.0–45.0 mm (1.38–1.77 in)** **Drive chain slack (fully extension of rear suspension)** **40.0–50.0 mm (1.57–1.97 in)**

EAS31366
INSTALLING THE REAR SHOCK ABSORBER ASSEMBLY

1. Install:
   - Spacer “1”
   - Rear shock absorber assembly “2”

	Rear shock absorber assembly nut (upper side) **58 Nm (5.8 m·kgf, 42 ft·lbf)** **Rear shock absorber assembly bolt (lower side)** **58 Nm (5.8 m·kgf, 42 ft·lbf)**

▼▼▼▼▼▼▼▼▼▼▼▼▼▼▼▼▼▼▼▼▼▼▼▼▼▼▼▼▼▼▼▼▼▼

To ensure that the seal lip “a” is positioned correctly, install the spacer into the rear shock absorber assembly as follows.

a. Push the spacer into the rear shock absorber assembly past the seal as shown in illustration “A”.
b. Push the spacer in the opposite direction to the proper installation position as shown in illustration “B”.

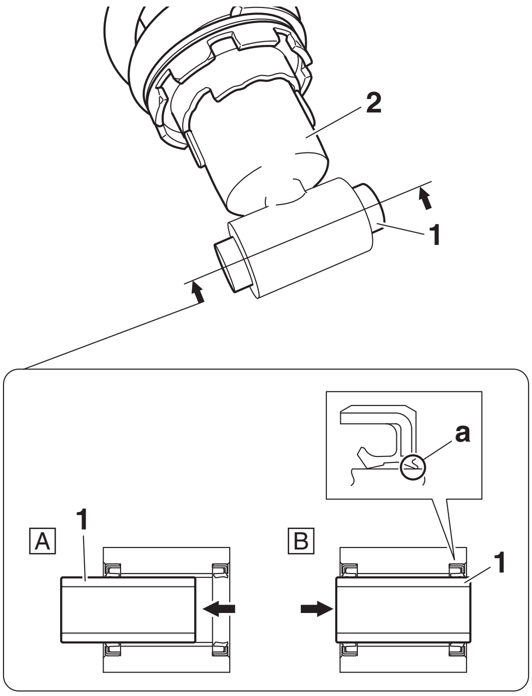
2
1
a
A
1
B
1

▲▲▲▲▲▲▲▲▲▲▲▲▲▲▲▲▲▲▲▲▲▲▲▲▲▲▲▲▲▲▲▲▲▲

EAS20038

CHAIN DRIVE

Removing the drive sprocket and drive chain

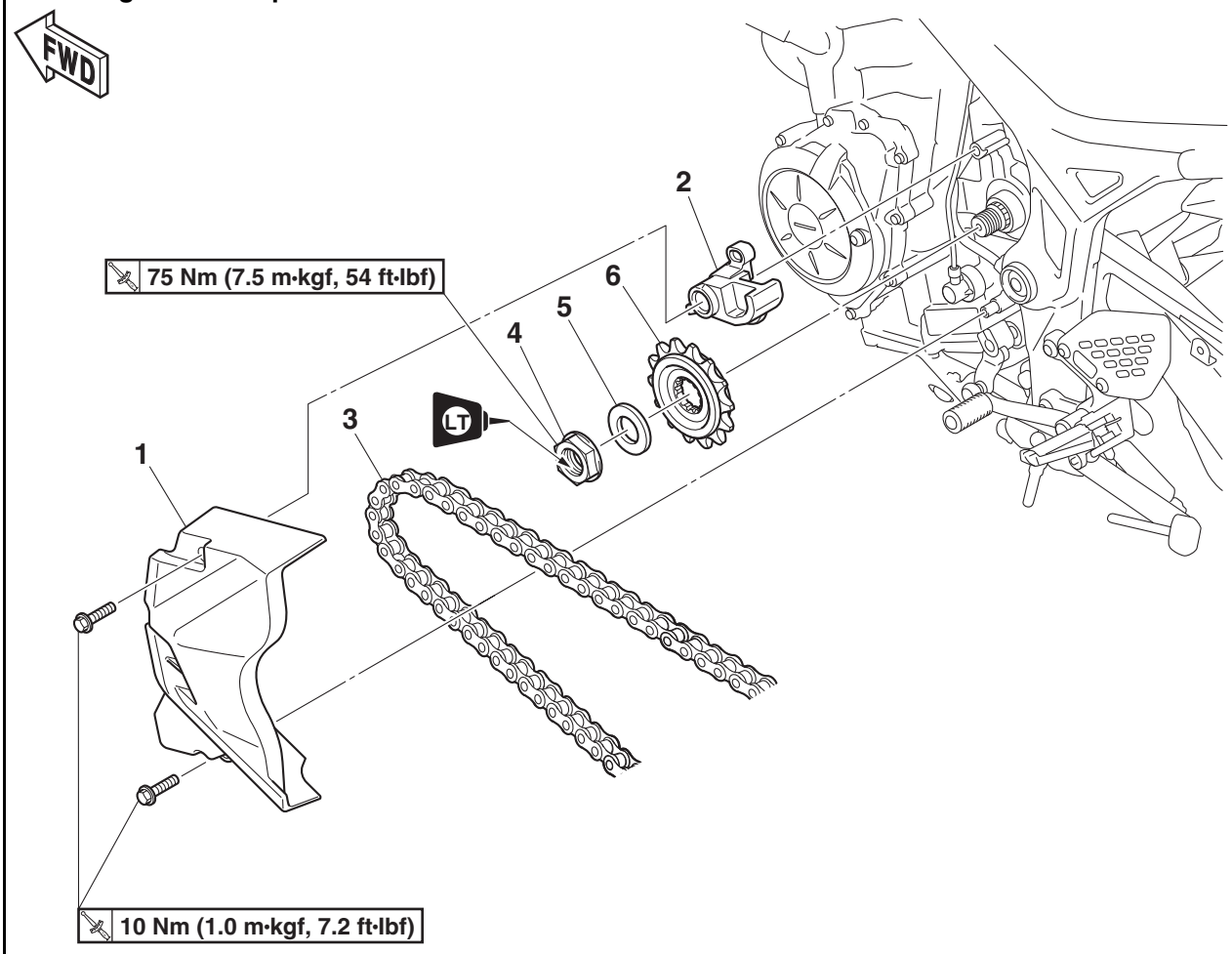

Order	Job/Parts to remove	Q'ty	Remarks
	Coolant reservoir		Refer to "RADIATOR" on page 6-1.
	Swingarm		Refer to "SWINGARM AND REAR SHOCK ABSORBER ASSEMBLY" on page 4-87.
1	Drive sprocket cover	1	
2	Drive chain guide	1	
3	Drive chain	1	
4	Drive sprocket nut	1	
5	Washer	1	
6	Drive sprocket	1	

EAS30229
REMOVING THE DRIVE CHAIN
1. Stand the vehicle on a level surface.

EWA13120
WARNING

Securely support the vehicle so that there is no danger of it falling over.

TIP

Place the vehicle on a suitable stand so that the rear wheel is elevated.

EAS30230
CHECKING THE DRIVE CHAIN
1. Measure:
   - 15-link section “a” of the drive chain
     Out of specification → Replace the drive chain.

15-link length limit
239.3 mm (9.42 in)

▼▼▼▼▼▼▼▼▼▼▼▼▼▼▼▼▼▼▼▼▼▼▼▼▼▼▼▼▼▼▼▼▼▼

a. Measure the length “b” between the inner sides of the pins and the length “c” between the outer sides of the pins on a 15-link section of the drive chain as shown in the illustration.
b. Calculate the length “a” of the 15-link section of the drive chain using the following formula.
   Drive chain 15-link section length “a” = (length “b” between pin inner sides + length “c” between pin outer sides)/2

TIP

- When measuring a 15-link section of the drive chain, make sure that the drive chain is taut.
- Perform this procedure 2–3 times, at a different location each time.

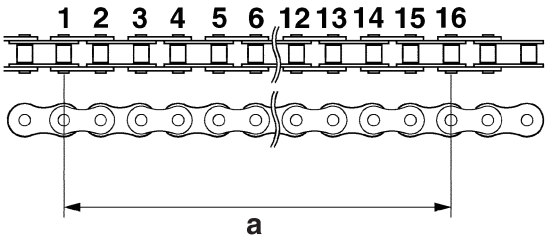

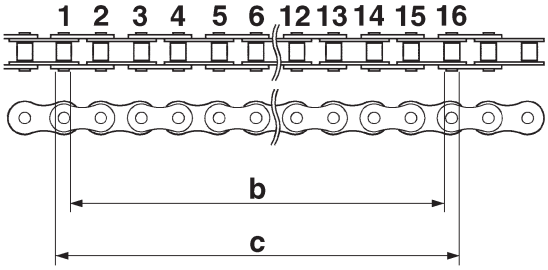

▲▲▲▲▲▲▲▲▲▲▲▲▲▲▲▲▲▲▲▲▲▲▲▲▲▲▲▲▲▲▲▲▲▲

2. Check:
   - Drive chain
     Stiffness → Clean and lubricate or replace.

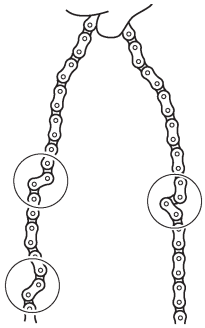

3. Clean:
   - Drive chain

▼▼▼▼▼▼▼▼▼▼▼▼▼▼▼▼▼▼▼▼▼▼▼▼▼▼▼▼▼▼▼▼▼▼

a. Wipe the drive chain with a clean cloth.
b. Put the drive chain in kerosene and remove any remaining dirt.
c. Remove the drive chain from the kerosene and completely dry it.

ECA19090
NOTICE

- **This vehicle has a drive chain with small rubber O-rings “1” between the drive chain side plates. Never use high-pressure water or air, steam, gasoline, certain solvents (e.g., benzine), or a coarse brush to clean the drive chain. High-pressure methods could force dirt or water into the drive chain’s internals, and solvents will deteriorate the O-rings. A coarse brush can also damage the O-rings. Therefore, use only kerosene to clean the drive chain.**
- **Do not soak the drive chain in kerosene for more than ten minutes, otherwise the O-rings can be damaged.**

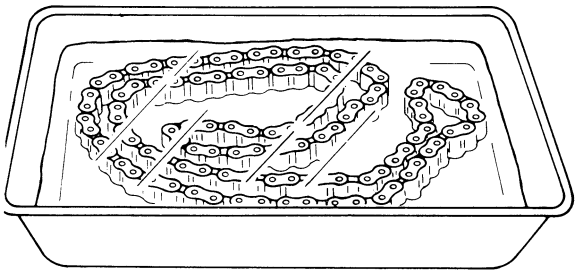

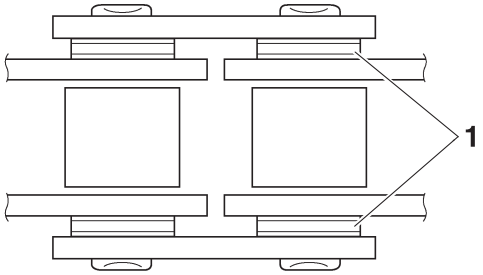

▲▲▲▲▲▲▲▲▲▲▲▲▲▲▲▲▲▲▲▲▲▲▲▲▲▲▲▲▲▲▲▲▲▲

4. Check:
   - O-rings “1”
     Damage → Replace the drive chain.
   - Drive chain rollers “2”
     Damage/wear → Replace the drive chain.
   - Drive chain side plates “3”
     Damage/wear/cracks → Replace the drive chain.

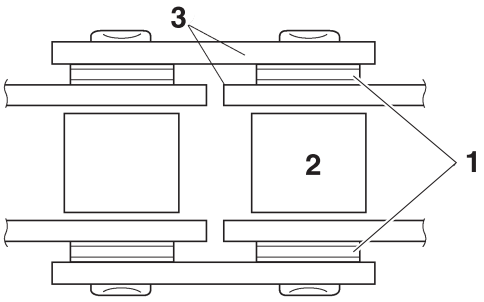

5. Lubricate:
   - Drive chain

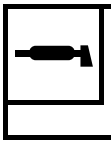

Recommended lubricant
Chain lubricant suitable for O-ring chains

EAS30231
CHECKING THE DRIVE SPROCKET

1. Check:
   - Drive sprocket
     More than 1/4 tooth “a” wear → Replace the drive chain sprocket, drive chain, and rear wheel sprocket as a set.
     Bent teeth → Replace the drive chain sprocket, drive chain, and rear wheel sprocket as a set.

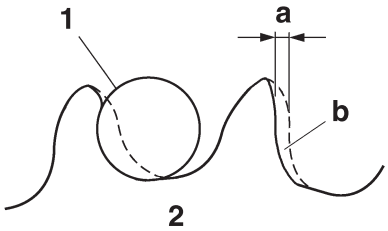

b. Correct
1. Drive chain roller
2. Drive sprocket

EAS30232
CHECKING THE REAR WHEEL SPROCKET

Refer to “CHECKING AND REPLACING THE REAR WHEEL SPROCKET” on page 4-31.

EAS30233
CHECKING THE REAR WHEEL DRIVE HUB

Refer to “CHECKING THE REAR WHEEL DRIVE HUB” on page 4-30.

EAS31116
INSTALLING THE DRIVE SPROCKET

1. Install:
   - Drive sprocket “1”
   - Washer
   - Drive sprocket nut

Drive sprocket nut
75 Nm (7.5 m·kgf, 54 ft·lbf)
LOCTITE®

TIP

- Install the drive sprocket with the mark “a” facing outward.
- Before installing the drive sprocket nut, remove any grease or oil from the nut.
- While applying the rear brake, tighten the drive sprocket nut.

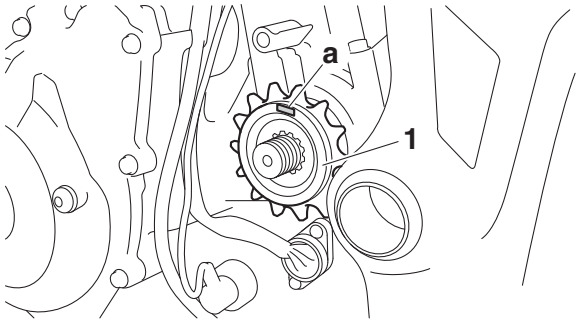

EAS30234

INSTALLING THE DRIVE CHAIN

1. Install:
   - Drive chain
   - Drive chain guide
   - Drive sprocket cover

TIP

Route the gear position switch lead, oil pressure switch lead, and fuel tank breather hose through the guide on the drive sprocket cover. Refer to “CABLE ROUTING” on page 2-43.

2. Adjust:
   - Drive chain slack
     Refer to“ADJUSTING THE DRIVE CHAIN SLACK” on page 3-17.

Drive chain slack
35.0–45.0 mm (1.38–1.77 in)
Drive chain slack (fully extension of rear suspension)
40.0–50.0 mm (1.57–1.97 in)

ECA13550

NOTICE

A drive chain that is too tight will overload the engine and other vital parts, and one that is too loose can skip and damage the swingarm or cause an accident. Therefore, keep the drive chain slack within the specified limits.

ENGINE

ENGINE INSPECTION 5-1
MEASURE THE COMPRESSION PRESSURE 5-1

ENGINE REMOVAL 5-3
INSTALLING THE ENGINE 5-10
ASSEMBLING THE MUFFLER 5-11
INSTALLING THE EXHAUST PIPE AND MUFFLER ASSEMBLY 5-11

CAMSHAFTS 5-13
REMOVING THE CAMSHAFTS 5-15
CHECKING THE CAMSHAFTS 5-16
CHECKING THE CAMSHAFT SPROCKETS 5-17
CHECKING THE TIMING CHAIN TENSIONER 5-17
INSTALLING THE CAMSHAFTS 5-18
INSTALLING THE CYLINDER HEAD COVER 5-21

CYLINDER HEAD 5-22
REMOVING THE CYLINDER HEAD 5-25
CHECKING THE TIMING CHAIN GUIDE (EXHAUST SIDE) 5-25
CHECKING THE CYLINDER HEAD 5-25
INSTALLING THE CYLINDER HEAD 5-25

VALVES AND VALVE SPRINGS 5-27
REMOVING THE VALVES 5-28
CHECKING THE VALVES AND VALVE GUIDES 5-28
CHECKING THE VALVE SEATS 5-30
CHECKING THE VALVE SPRINGS 5-31
CHECKING THE VALVE LIFTERS 5-32
INSTALLING THE VALVES 5-32

CYLINDER AND PISTONS 5-35
REMOVING THE PISTONS 5-36
CHECKING THE CYLINDERS AND PISTONS 5-36
CHECKING THE PISTON RINGS 5-37
CHECKING THE PISTON PINS 5-38
INSTALLING THE PISTONS AND CYLINDER 5-38

GENERATOR AND STARTER CLUTCH 5-41
REMOVING THE GENERATOR 5-43
REMOVING THE STARTER CLUTCH 5-43
CHECKING THE STARTER CLUTCH 5-43
INSTALLING THE STARTER CLUTCH 5-44
INSTALLING THE GENERATOR 5-45

ELECTRIC STARTER 5-46
CHECKING THE STARTER MOTOR 5-48
ASSEMBLING THE STARTER MOTOR 5-49
INSTALLING THE STARTER MOTOR 5-49

CLUTCH 5-50
REMOVING THE CLUTCH 5-53
CHECKING THE FRICTION PLATES 5-53
CHECKING THE CLUTCH PLATES 5-54
CHECKING THE CLUTCH SPRINGS 5-54
CHECKING THE CLUTCH HOUSING 5-54
CHECKING THE CLUTCH BOSS 5-54
CHECKING THE PRESSURE PLATE 5-55
CHECKING THE PRIMARY DRIVE GEAR 5-55
CHECKING THE PRIMARY DRIVEN GEAR 5-55
CHECKING THE PULL LEVER SHAFT AND PULL ROD 5-55
INSTALLING THE CLUTCH 5-55

SHIFT SHAFT 5-58
CHECKING THE SHIFT SHAFT 5-61
CHECKING THE STOPPER LEVER 5-61
INSTALLING THE SHIFT SHAFT 5-61
INSTALLING THE SHIFT ROD 5-61

OIL PUMP 5-63
CHECKING THE OIL PUMP IDLE GEAR 5-65
CHECKING THE OIL PUMP 5-65
CHECKING THE RELIEF VALVE 5-65
ASSEMBLING THE OIL PUMP 5-65
INSTALLING THE OIL PUMP 5-66

OIL PAN 5-67
CHECKING THE OIL STRAINER 5-69
INSTALLING THE OIL PAN 5-69

CRANKCASE 5-70
DISASSEMBLING THE CRANKCASE 5-73
CHECKING THE BALANCER DRIVE GEAR 5-74
CHECKING THE TIMING CHAIN AND TIMING CHAIN GUIDE (INTAKE SIDE) 5-74
CHECKING THE CRANKCASE 5-74
CHECKING THE OIL NOZZLES 5-74
ASSEMBLING THE CRANKCASE 5-74
INSTALLING THE OIL PRESSURE SWITCH AND GEAR POSITION SWITCH 5-77

CRANKSHAFT AND BALANCER SHAFT 5-79
REMOVING THE BALANCER SHAFT JOURNAL BEARINGS 5-82
REMOVING THE CRANKSHAFT JOURNAL BEARINGS 5-82
REMOVING THE CONNECTING RODS 5-82
CHECKING THE BALANCER SHAFT 5-82
CHECKING THE CRANKSHAFT 5-84
CHECKING THE CONNECTING RODS 5-85
INSTALLING THE CONNECTING RODS 5-87
INSTALLING THE CRANKSHAFT 5-88
ASSEMBLING THE BALANCER SHAFT ASSEMBLY 5-88
INSTALLING THE BALANCER SHAFT ASSEMBLY 5-89

TRANSMISSION 5-90
CHECKING THE SHIFT FORKS 5-94
CHECKING THE SHIFT DRUM ASSEMBLY 5-94
CHECKING THE TRANSMISSION 5-94
ASSEMBLING THE MAIN AXLE AND DRIVE AXLE 5-95
INSTALLING THE TRANSMISSION 5-95

EAS20041

ENGINE INSPECTION

EAS30249

MEASURE THE COMPRESSION PRESSURE

The following procedure applies to all of the cylinders.

TIP

Insufficient compression pressure will result in a loss of performance.

1. Measure:
   - Valve clearance
     Out of specification → Adjust.
     Refer to "ADJUSTING THE VALVE CLEARANCE" on page 3-5.
2. Start the engine, warm it up for several minutes, and then turn it off.
3. Remove:
   - Rider seat
     Refer to "GENERAL CHASSIS (1)" on page 4-1.
   - Side panel assemblies
     Refer to "GENERAL CHASSIS (2)" on page 4-3.
   - Fuel tank cover assembly
     Refer to "GENERAL CHASSIS (3)" on page 4-8.
   - Fuel tank
     Refer to "FUEL TANK" on page 7-1.
4. Disconnect:
   - Spark plug caps "1"

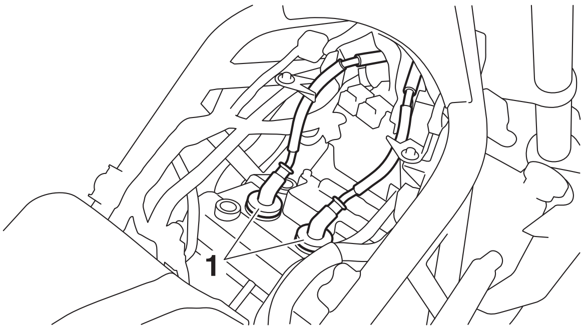

5. Remove:
   - Spark plugs

ECA13340

NOTICE

Before removing the spark plugs, use compressed air to blow away any dirt accumulated in the spark plug wells to prevent it from falling into the cylinders.

6. Install:
   - Extension "1"
   - Compression gauge "2"

Extension
90890-04136
Compression gauge
90890-03081
Engine compression tester
YU-33223

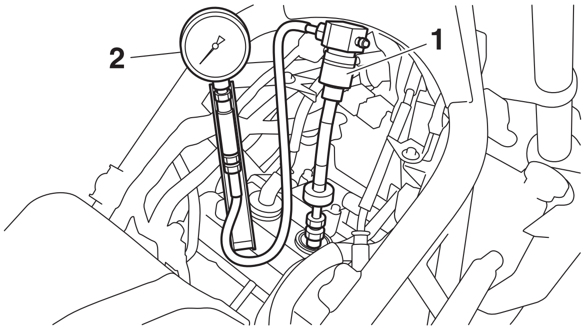

7. Measure:
   - Compression pressure
     Out of specification → Refer to steps (c) and (d).

Compression pressure
1252–1612 kPa/390 r/min (12.5–16.1 kgf/cm²/390 r/min, 178.2–229.4 psi/390 r/min)

▼▼▼▼▼▼▼▼▼▼▼▼▼▼▼▼▼▼▼▼▼▼▼▼▼▼▼▼▼▼▼▼▼▼▼

a. Turn the main switch to "ON".
b. With the throttle wide open, crank the engine until the reading on the compression gauge stabilizes.

EWA12940

WARNING

To prevent sparking, ground all spark plug leads before cranking the engine.

TIP

The difference in compression pressure between cylinders should not exceed 100 kPa (1 kg/cm², 14 psi).

c. If the compression pressure is above the maximum specification, check the cylinder head, valve surfaces and piston crown for carbon deposits.
   Carbon deposits → Eliminate.
d. If the compression pressure is below the minimum specification, pour a teaspoonful of engine oil into the spark plug bore and measure again.
   Refer to the following table.

Compression pressure (with oil applied into the cylinder)	
Reading	Diagnosis
Higher than without oil	Piston ring(s) wear or damage → Repair.
Same as without oil	Pistons, valves, cylinder head gasket or piston ring(s) possibly defective → Repair.

▲▲▲▲▲▲▲▲▲▲▲▲▲▲▲▲▲▲▲▲▲▲▲▲▲▲▲▲▲▲▲▲▲▲

8. Install:
   - Spark plugs

	Spark plug **13 Nm (1.3 m·kgf, 9.4 ft·lbf)**

9. Connect:
   - Spark plug caps
10. Install:
   - Fuel tank
     Refer to “FUEL TANK” on page 7-1.
   - Fuel tank cover assembly
     Refer to “GENERAL CHASSIS (3)” on page 4-8.
   - Side panel assemblies
     Refer to “GENERAL CHASSIS (2)” on page 4-3.
   - Rider seat
     Refer to “GENERAL CHASSIS (1)” on page 4-1.

EAS20042

ENGINE REMOVAL

Removing the muffler and exhaust pipe

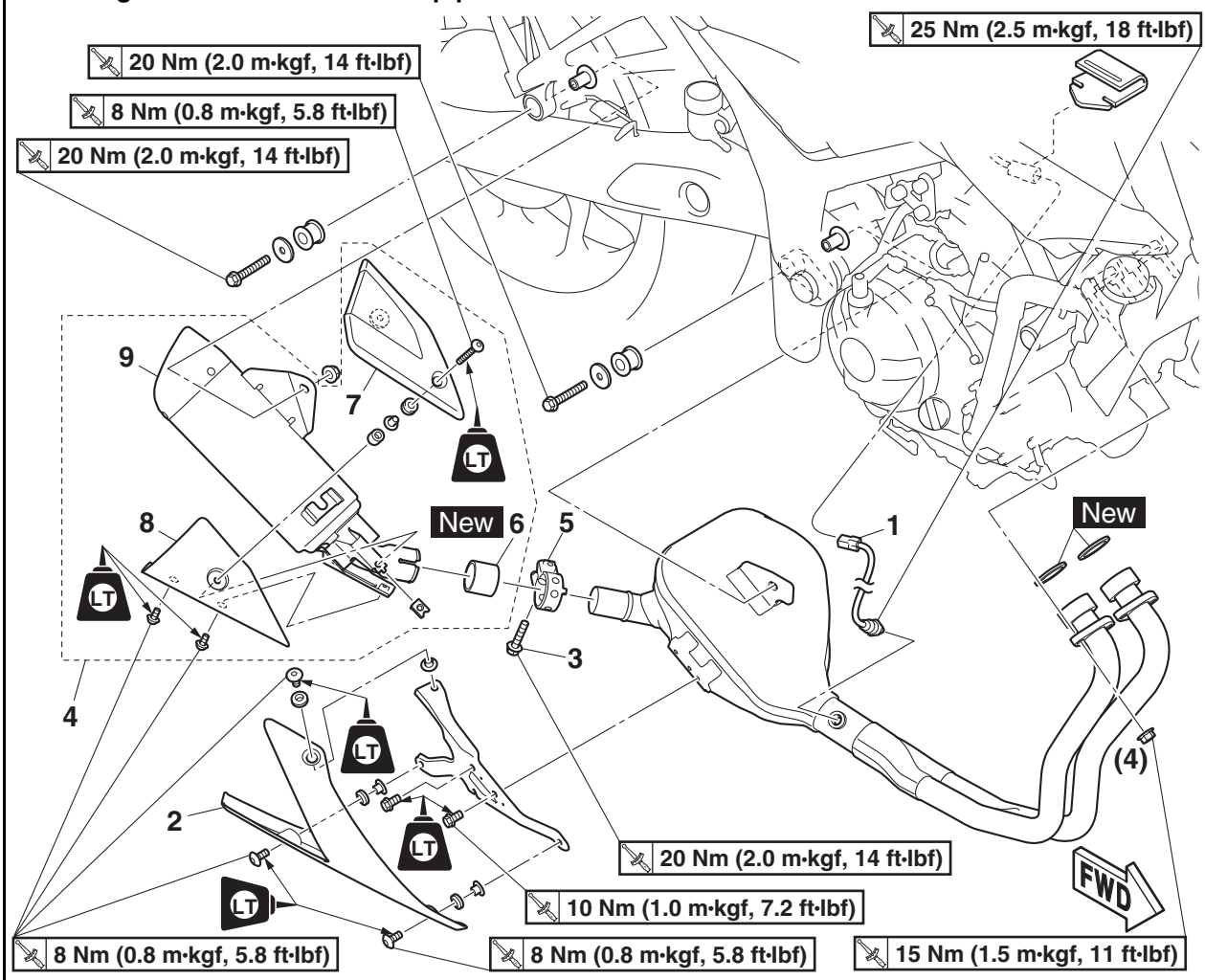

Order	Job/Parts to remove	Q'ty	Remarks
	Bottom cowling		Refer to "GENERAL CHASSIS (3)" on page 4-8.
	Coolant reservoir		Refer to "RADIATOR" on page 6-1.
	Footrest assembly (right)		Refer to "REAR BRAKE" on page 4-47.
1	O_2 sensor coupler	1	Disconnect.
2	Exhaust pipe protector	1	
3	Exhaust pipe joint bolt	1	Loosen.
4	Muffler assembly	1	
5	Exhaust pipe joint	1	
6	Gasket	1	
7	Muffler protector (outer)	1	
8	Muffler protector (inner)	1	
9	Muffler	1	

Removing the muffler and exhaust pipe

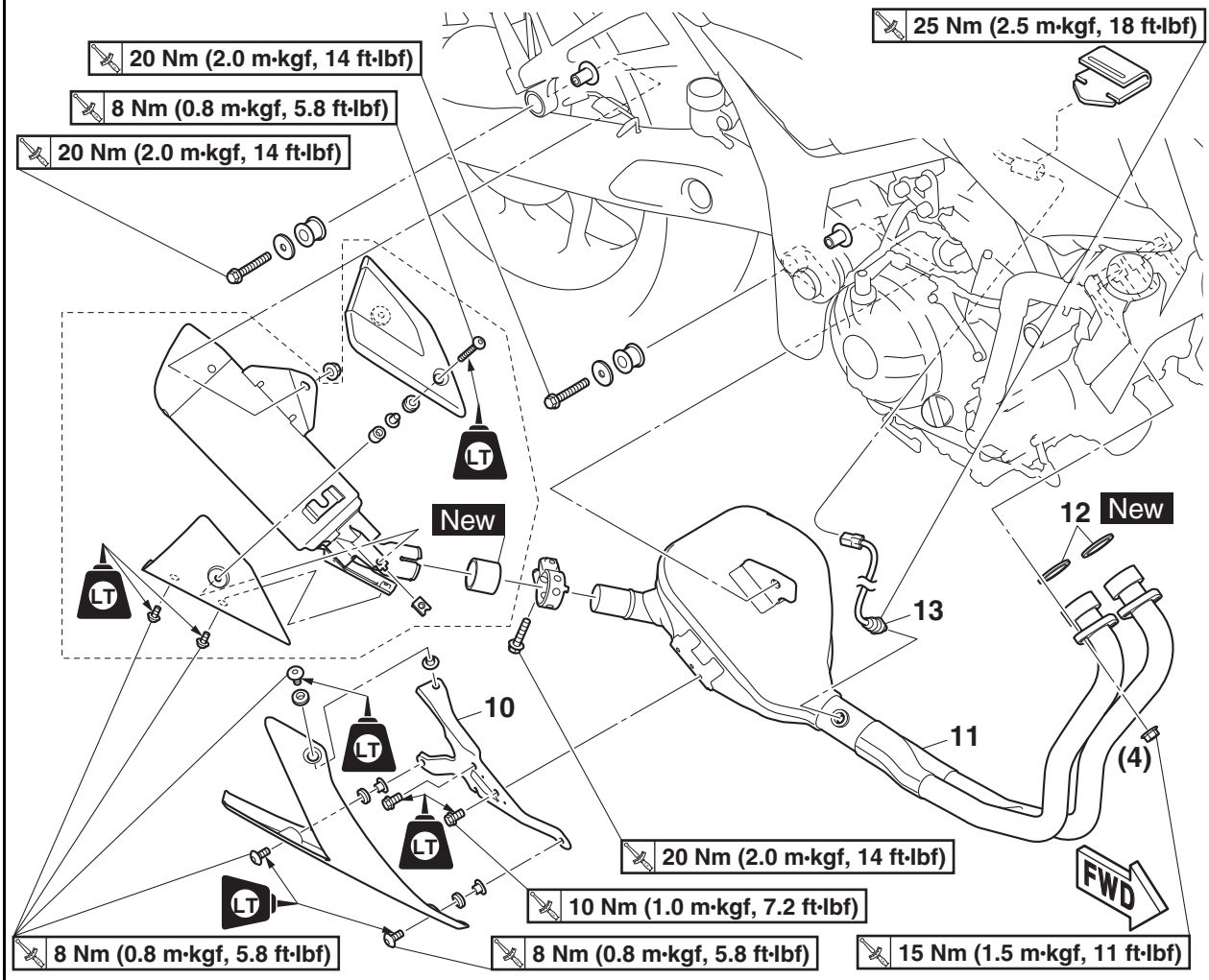

Order	Job/Parts to remove	Q'ty	Remarks
10	Exhaust pipe protector bracket	1	
11	Exhaust pipe	1	
12	Exhaust pipe gasket	2	
13	O_2 sensor	1	Remove the O_2 sensor only when necessary.

Disconnecting the leads and cable

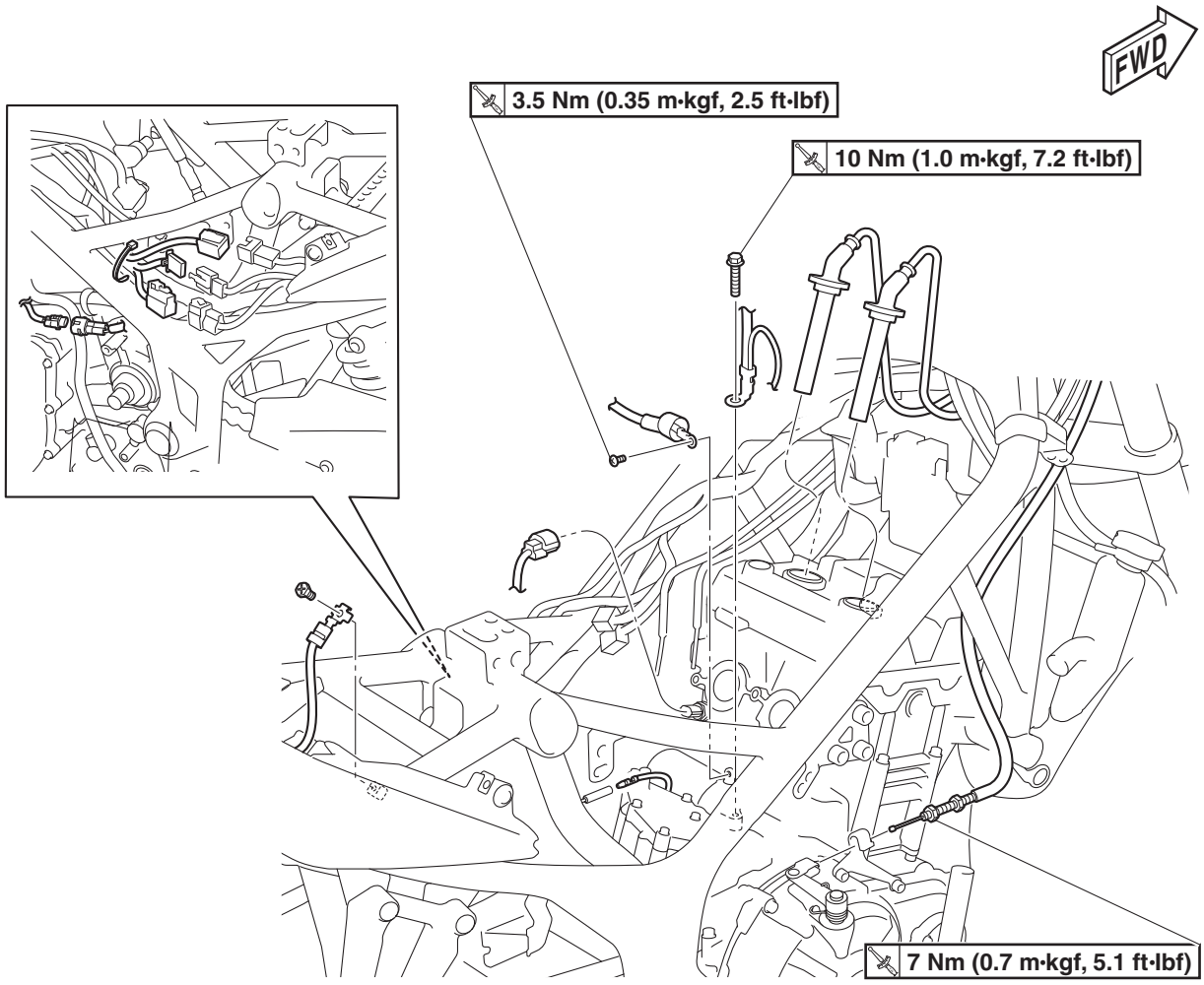

Order	Job/Parts to remove	Q'ty	Remarks
	Fuel tank cover assembly/Front side cowling assembly		Refer to "GENERAL CHASSIS (3)" on page 4-8.
	Fuel tank		Refer to "FUEL TANK" on page 7-1.
	Air filter case		Refer to "GENERAL CHASSIS (5)" on page 4-15.
	Throttle bodies		Refer to "THROTTLE BODIES" on page 7-5.
	Air cut-off valve/Reed valves		Refer to "AIR INDUCTION SYSTEM" on page 7-15.
	Coolant		Drain. Refer to "CHANGING THE COOLANT" on page 3-24.
	Coolant reservoir		Refer to "RADIATOR" on page 6-1.
	Water pump inlet hose		Refer to "WATER PUMP" on page 6-7.

Disconnecting the leads and cable

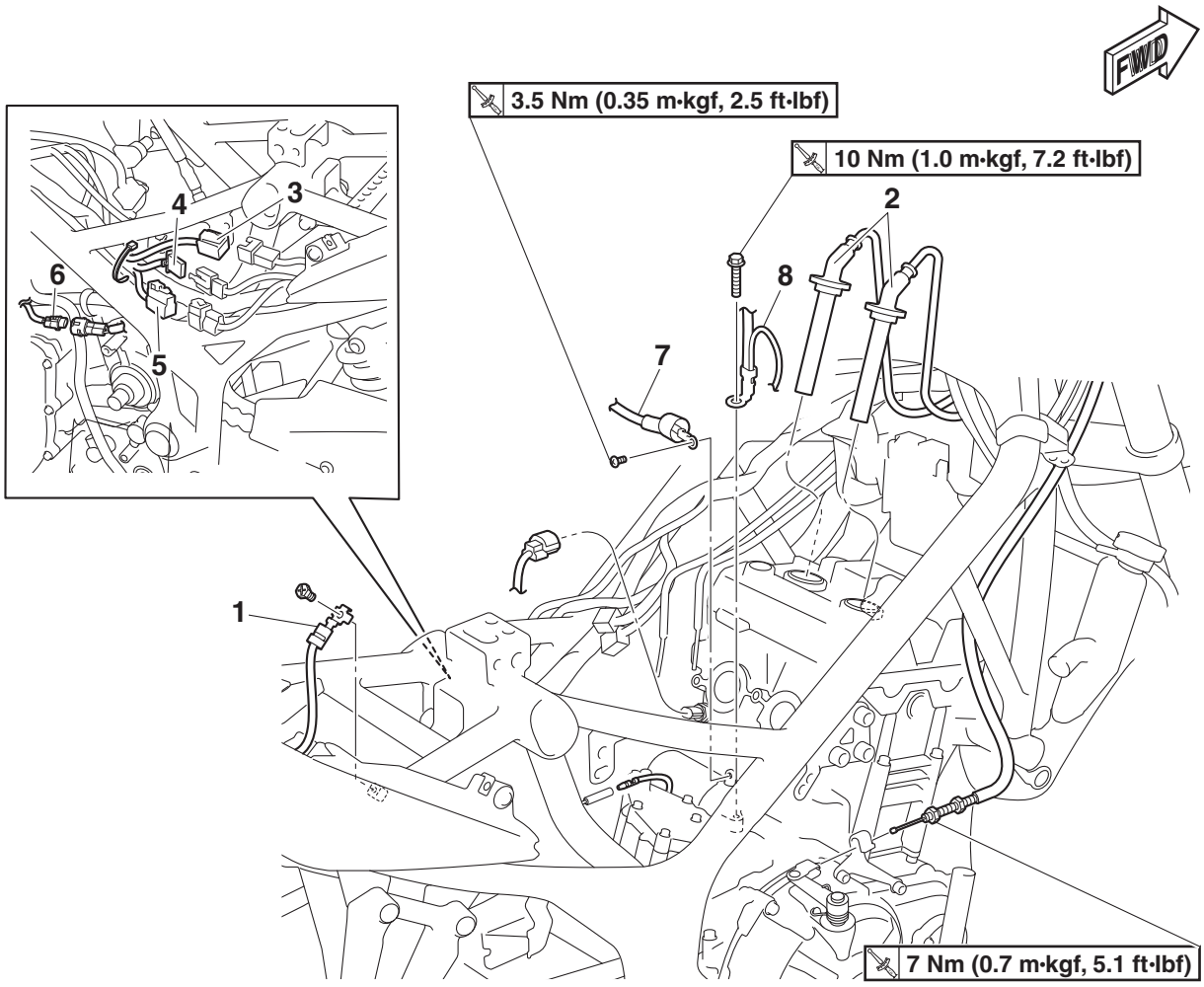

Order	Job/Parts to remove	Q'ty	Remarks
	Radiator inlet hose		Refer to "THERMOSTAT" on page 6-5.
	Drive chain		Refer to "CHAIN DRIVE" on page 4-92.
	Engine oil		Drain. Refer to "CHANGING THE ENGINE OIL" on page 3-22.
1	Negative battery lead	1	Disconnect.
2	Spark plug cap	2	Disconnect.
3	Gear position switch coupler	1	Disconnect.
4	Crankshaft position sensor coupler	1	Disconnect.
5	Stator coil coupler	1	Disconnect.
6	Sidestand switch coupler	1	Disconnect.
7	Starter motor lead	1	Disconnect.
8	Engine ground lead	1	Disconnect.

Disconnecting the leads and cable

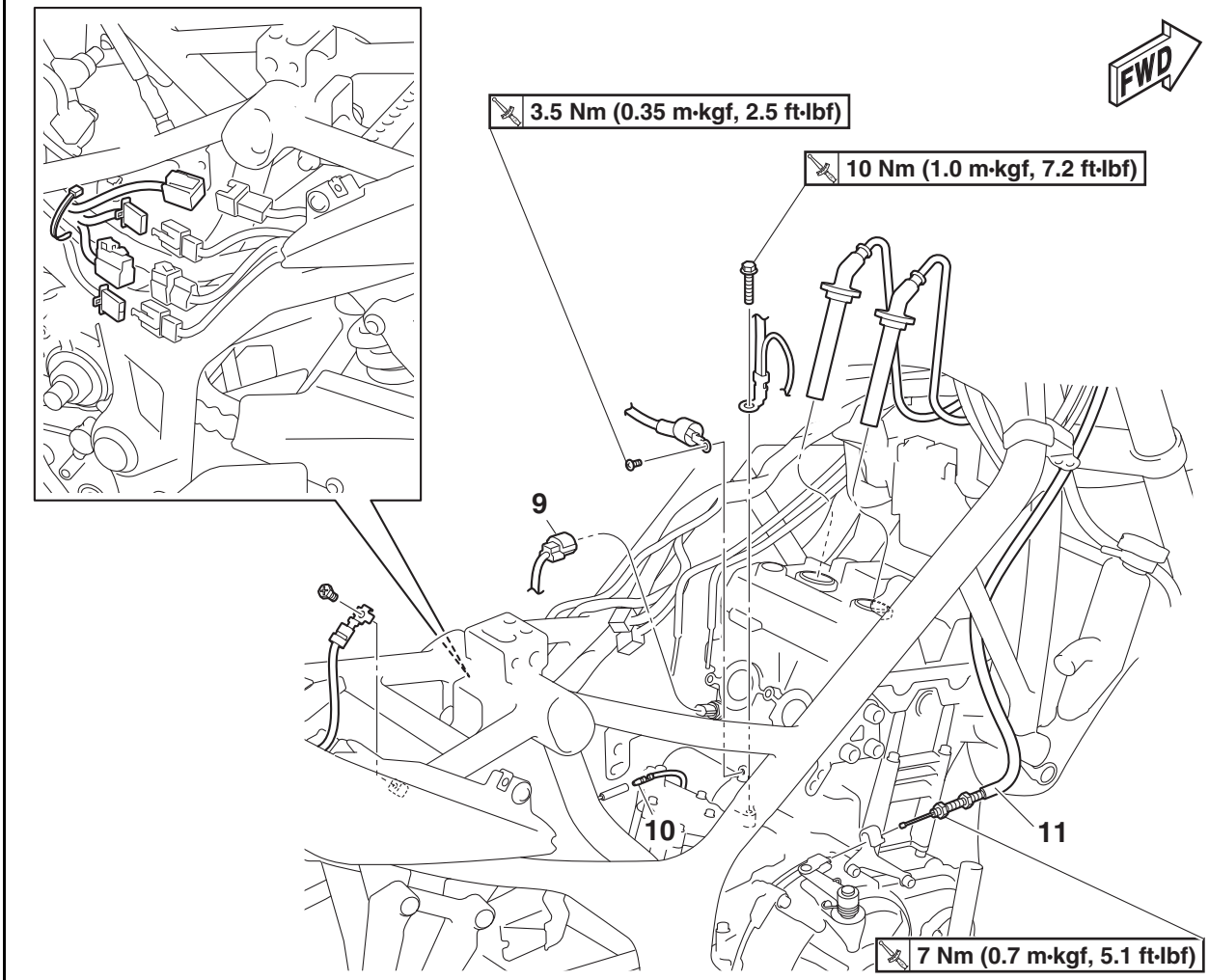

Order	Job/Parts to remove	Q'ty	Remarks
9	Coolant temperature sensor coupler	1	Disconnect.
10	Oil pressure switch connector	1	Disconnect.
11	Clutch cable	1	Disconnect.

Removing the engine

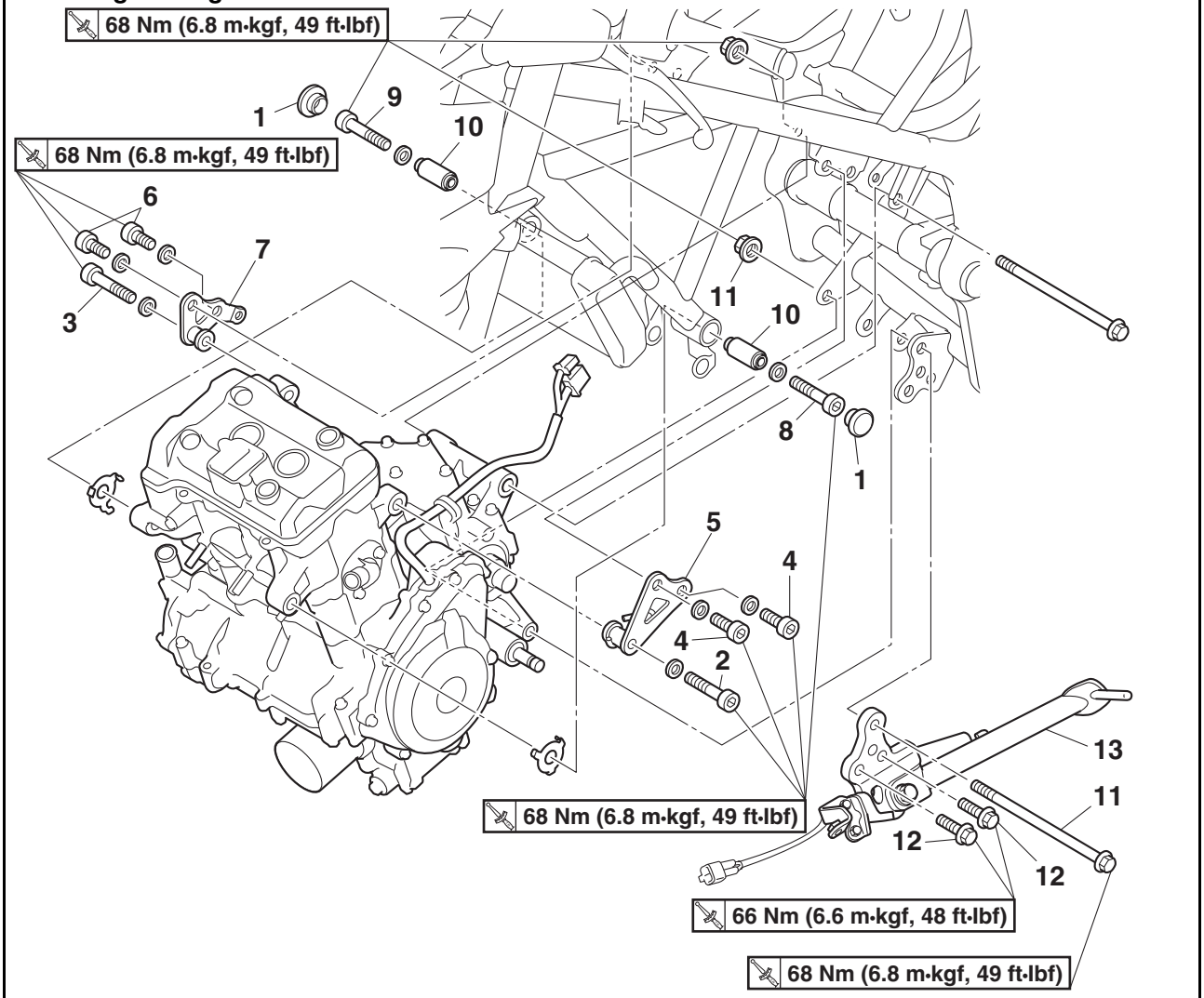

Order	Job/Parts to remove	Q'ty	Remarks
1	Engine mounting bolt cap	2	
2	Engine mounting bolt (left upper side)	1	
3	Engine mounting bolt (right upper side)	1	
4	Engine bracket bolt (left)	2	
5	Engine bracket (left)	1	
6	Engine bracket bolt (right)	2	
7	Engine bracket (right)	1	
8	Engine mounting bolt (left front side)	1	
9	Engine mounting bolt (right front side)	1	
10	Bushing	2	
11	Engine mounting bolt/nut (rear lower side)	1/1	
12	Sidestand bracket bolt	2	
13	Sidestand	1	

Removing the engine

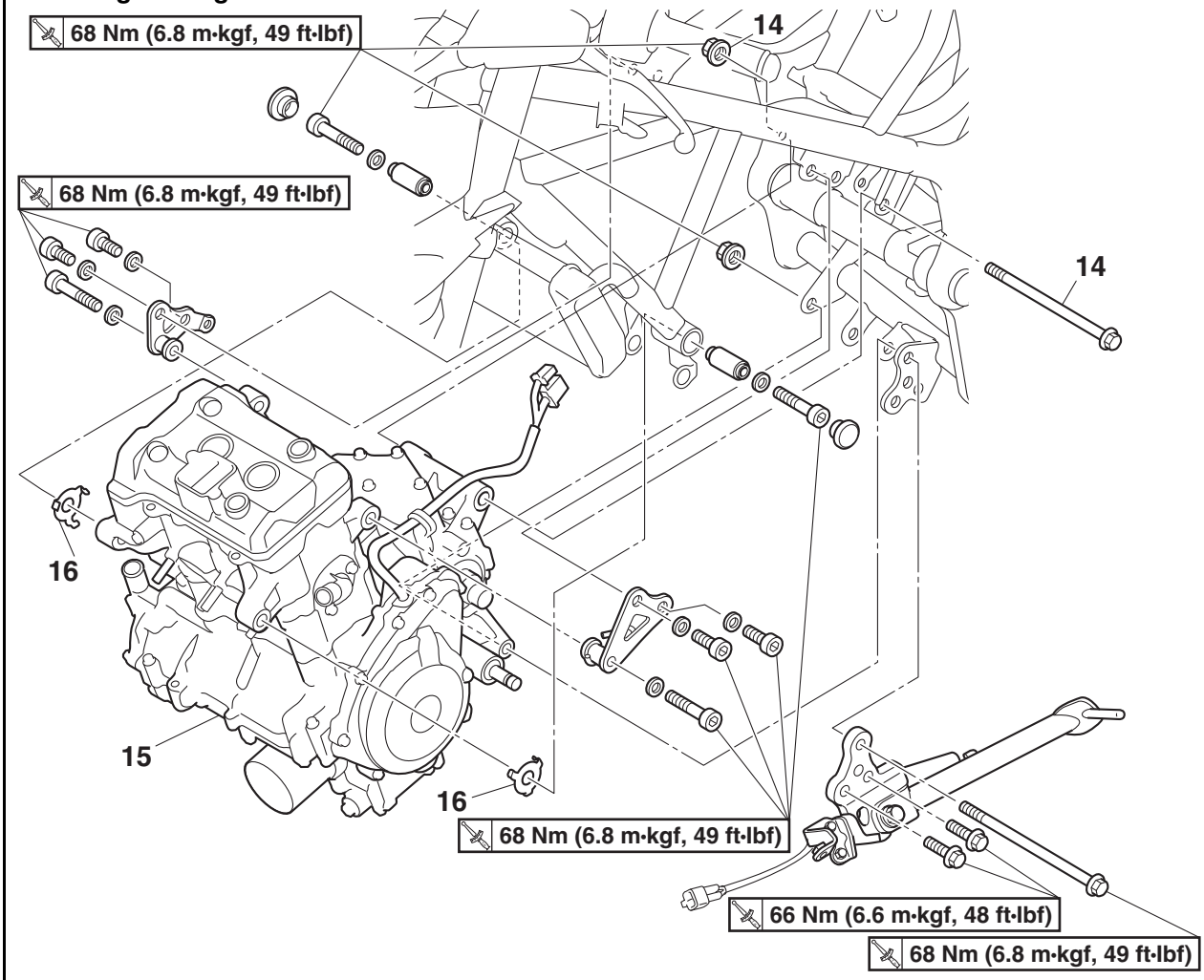

Order	Job/Parts to remove	Q'ty	Remarks
14	Engine mounting bolt/nut (rear upper side)	1/1	
15	Engine	1	
16	Plate	2	

EAS30251
INSTALLING THE ENGINE

1. Install:
   - Plates “1”
     (to the engine)
   - Engine “2”
   - Engine mounting bolt (rear upper side) “3”
   - Engine mounting nut (rear upper side) “4”
   - Sidestand “5”
   - Sidestand bracket bolts “6”
   - Engine mounting bolt (rear lower side) “7”
   - Engine mounting nut (rear lower side) “8”
   - Bushings “9”
   - Engine mounting bolt (right front side) “10”
   - Engine mounting bolt (left front side) “11”
   - Engine bracket (right) “12”
   - Engine bracket bolts (right) “13”
   - Engine bracket (left) “14”
   - Engine bracket bolts (left) “15”
   - Engine mounting bolt (right upper side) “16”
   - Engine mounting bolt (left upper side) “17”

TIP

- Degrease the engine mounting nut (rear upper side) and engine mounting nut (rear lower side) before installation.
- Make sure that the edge “a” of each bushing is aligned with the edge “b” of the frame as shown in the illustration.
- Temporarily tighten the bolts and nuts.

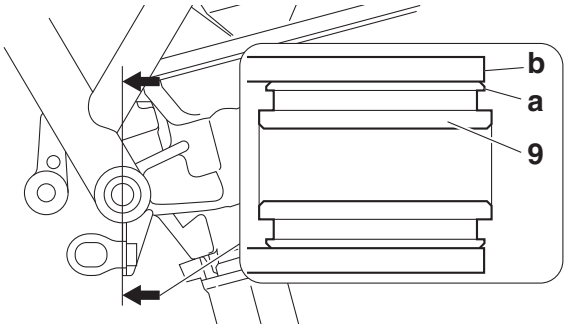

2. Tighten:
   - Engine mounting nut (rear upper side) “4”
   - Sidestand bracket bolts “6”
   - Engine mounting nut (rear lower side) “8”
   - Engine mounting bolt (right front side) “10”
   - Engine mounting bolt (left front side) “11”
   - Engine bracket bolts (right) “13”
   - Engine bracket bolts (left) “15”
   - Engine mounting bolt (right upper side) “16”
   - Engine mounting bolt (left upper side) “17”

Engine mounting nut (rear upper side)
68 Nm (6.8 m·kgf, 49 ft·lbf)
Sidestand bracket bolt
66 Nm (6.6 m·kgf, 48 ft·lbf)
Engine mounting nut (rear lower side)
68 Nm (6.8 m·kgf, 49 ft·lbf)
Engine mounting bolt (right front side)
68 Nm (6.8 m·kgf, 49 ft·lbf)
Engine mounting bolt (left front side)
68 Nm (6.8 m·kgf, 49 ft·lbf)
Engine bracket bolt (right)
68 Nm (6.8 m·kgf, 49 ft·lbf)
Engine bracket bolt (left)
68 Nm (6.8 m·kgf, 49 ft·lbf)
Engine mounting bolt (right upper side)
68 Nm (6.8 m·kgf, 49 ft·lbf)
Engine mounting bolt (left upper side)
68 Nm (6.8 m·kgf, 49 ft·lbf)

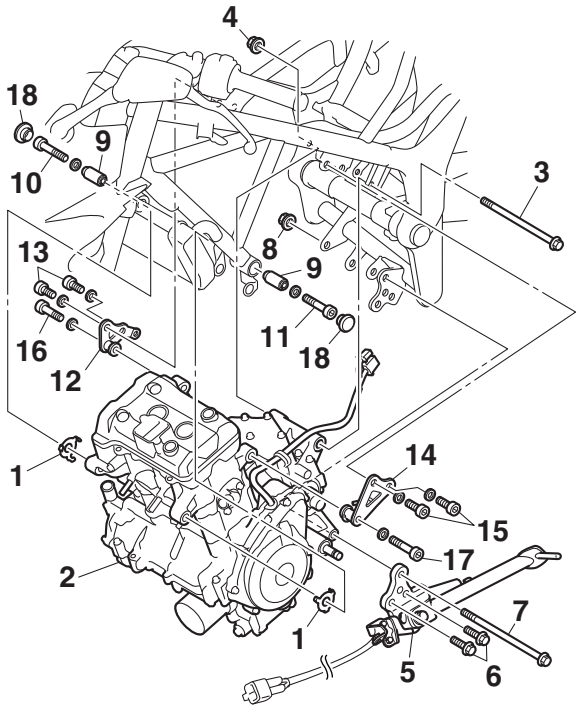

3. Install:
   - Engine mounting bolt caps “18”

TIP

Align the projection “a” on the engine mounting bolt cap with the portion “b” of the front cowling assembly stay.

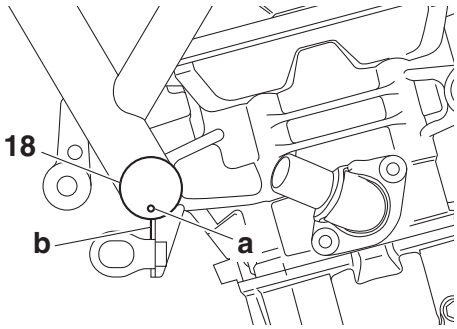

EAS31309
ASSEMBLING THE MUFFLER

1. Install:
   - Gasket “1” New
     (to the muffler)

Installed depth “a”
3–3.5 mm (0.12–0.14 in)

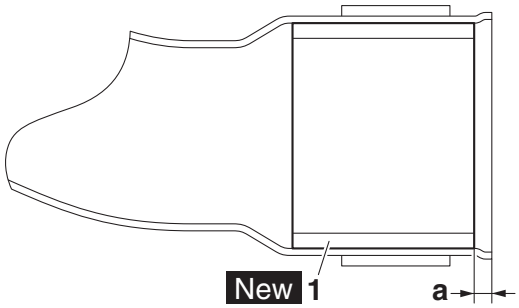

EAS31310
INSTALLING THE EXHAUST PIPE AND MUFFLER ASSEMBLY

1. Install:
   - Exhaust pipe gaskets “1” New
     (to the cylinder head)

TIP

Install the exhaust gasket with its projections “a” facing toward the cylinder head.

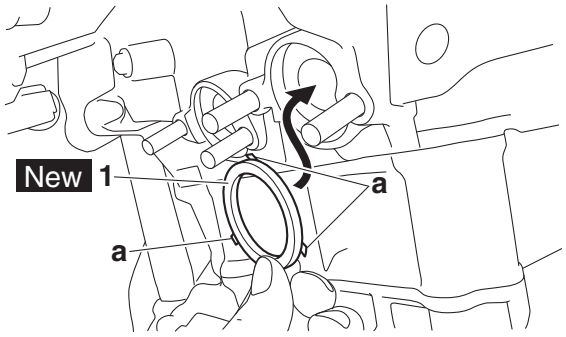

2. Install:
   - Exhaust pipe “2”
   - Exhaust pipe nuts “3”
   - Exhaust pipe bolt “4”

TIP

Temporarily tighten the bolt and nuts.

3. Tighten:
   - Exhaust pipe nuts “3”
   - Exhaust pipe bolt “4”
   - Exhaust pipe bolt “5”

Exhaust pipe nut
15 Nm (1.5 m·kgf, 11 ft·lbf)
Exhaust pipe bolt
20 Nm (2.0 m·kgf, 14 ft·lbf)

4. Install:
   - Exhaust pipe protector bracket “6”
     (to the exhaust pipe)

Exhaust pipe protector bracket bolt
10 Nm (1.0 m·kgf, 7.2 ft·lbf)
LOCTITE®

5. Install:
   - Muffler assembly “7”
   - Muffler assembly bolt “8”

TIP

Temporarily tighten the muffler assembly bolt.

6. Tighten:
   - Muffler assembly bolt “8”
   - Exhaust pipe joint bolt “9”

Muffler assembly bolt
20 Nm (2.0 m·kgf, 14 ft·lbf)
Exhaust pipe joint bolt
20 Nm (2.0 m·kgf, 14 ft·lbf)

7. Install:
   - Exhaust pipe protector “10”

Exhaust pipe protector bolt
8 Nm (0.8 m·kgf, 5.8 ft·lbf)
LOCTITE®

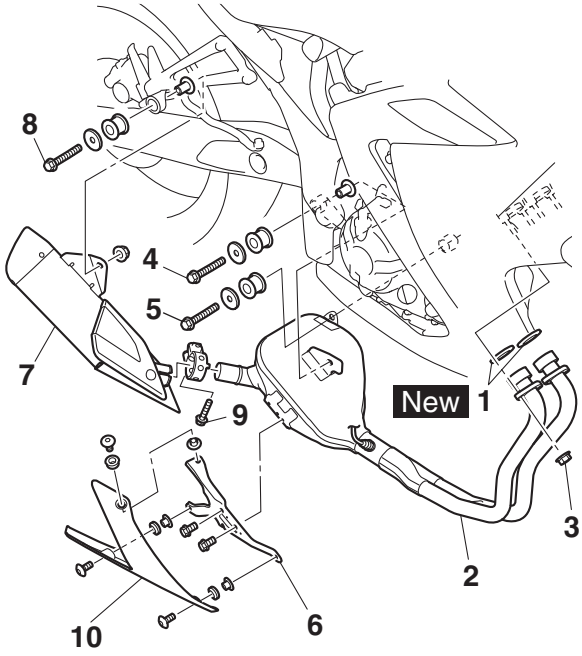
8
4
5
7
9
New
1
3
2
10
6

EAS20043

CAMSHAFTS

Removing the cylinder head cover

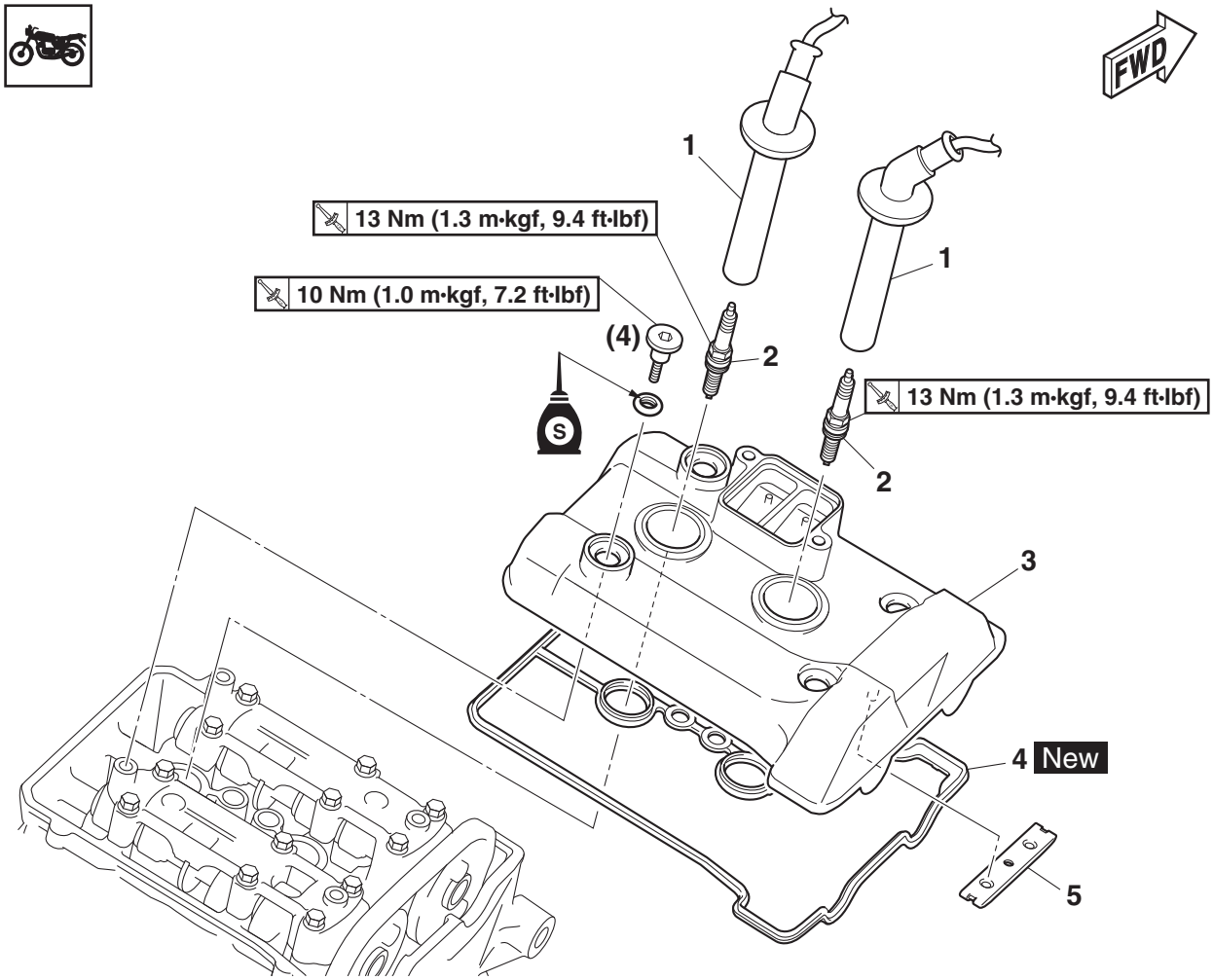

Order	Job/Parts to remove	Q'ty	Remarks
	Rider seat		Refer to "GENERAL CHASSIS (1)" on page 4-1.
	Side panel assemblies		Refer to "GENERAL CHASSIS (2)" on page 4-3.
	Fuel tank cover assembly		Refer to "GENERAL CHASSIS (3)" on page 4-8.
	Fuel tank		Refer to "FUEL TANK" on page 7-1.
	Air cut-off valve/Reed valve		Refer to "AIR INDUCTION SYSTEM" on page 7-15.
1	Spark plug cap	2	Disconnect.
2	Spark plug	2	
3	Cylinder head cover	1	
4	Cylinder head cover gasket	1	
5	Timing chain guide (upper side)	1	

Removing the camshafts

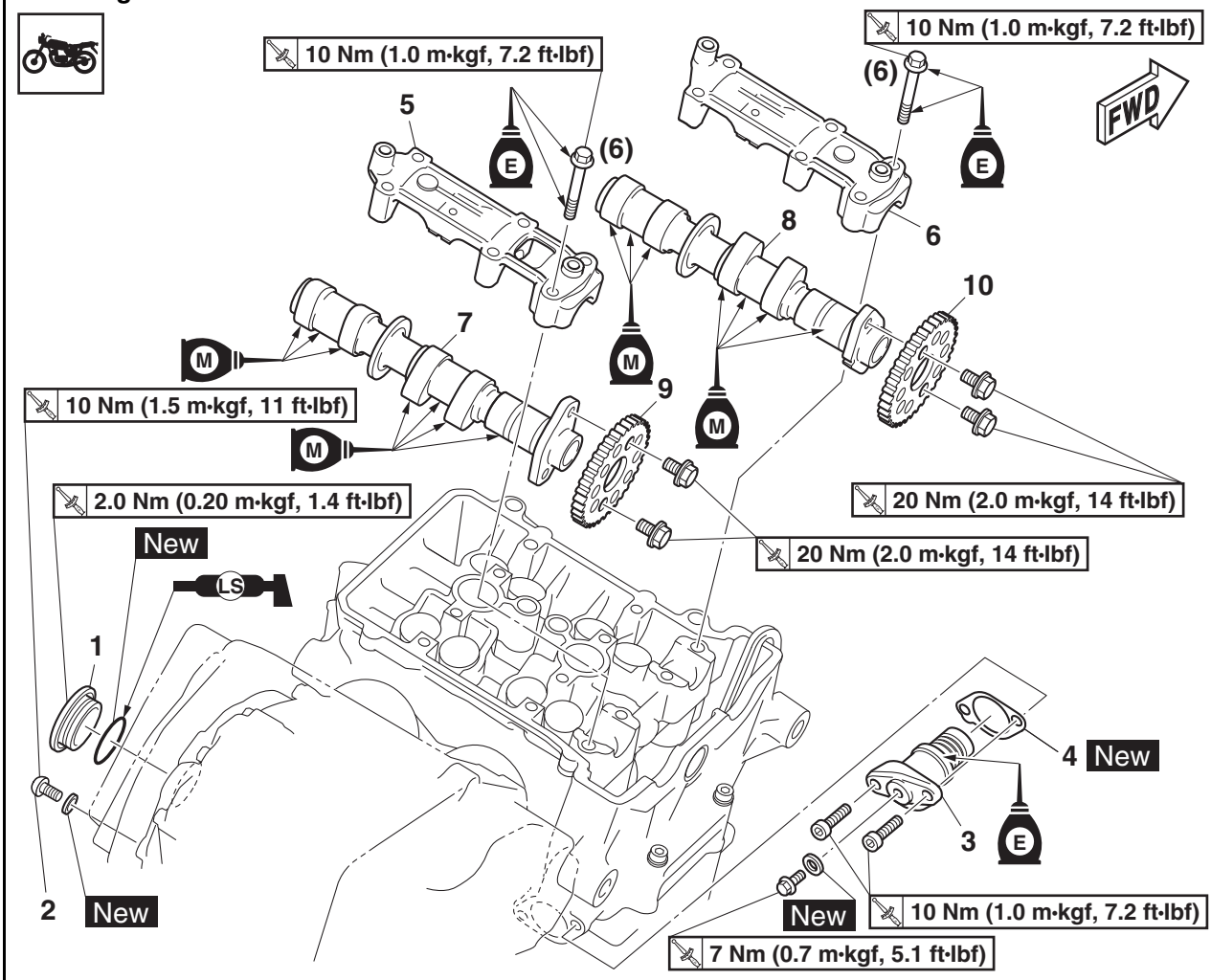

Order	Job/Parts to remove	Q'ty	Remarks
1	Crankshaft end cover	1	
2	Timing mark accessing bolt	1	
3	Timing chain tensioner	1	
4	Timing chain tensioner gasket	1	
5	Intake camshaft cap	1	
6	Exhaust camshaft cap	1	
7	Intake camshaft	1	
8	Exhaust camshaft	1	
9	Intake camshaft sprocket	1	
10	Exhaust camshaft sprocket	1	

EAS30256
REMOVING THE CAMSHAFTS

1. Remove:
   - Crankshaft end cover “1”
   - Timing mark accessing bolt “2”

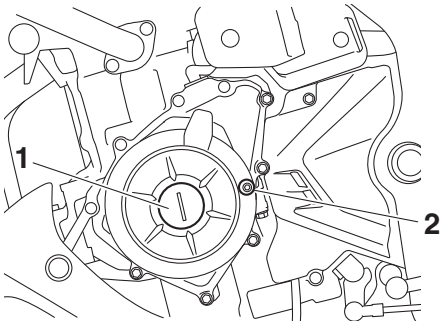

2. Align:
   - Marks “a” on the generator rotor (with the slots “b” in the generator rotor cover)

▼▼▼▼▼▼▼▼▼▼▼▼▼▼▼▼▼▼▼▼▼▼▼▼▼▼▼▼▼▼▼▼▼▼

a. Turn the crankshaft counterclockwise.
b. Position the marks “a” on the generator rotor on both sides of the slots “b” in the generator rotor cover.

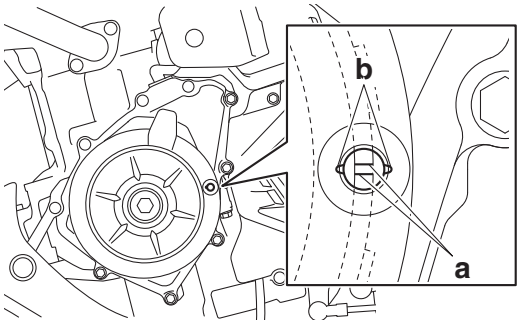

TIP

When the alignment mark “c” on the intake camshaft sprocket and the alignment mark “d” on the exhaust camshaft sprocket are aligned with the edge “e” of the cylinder head, piston #1 is at 90° ATDC.

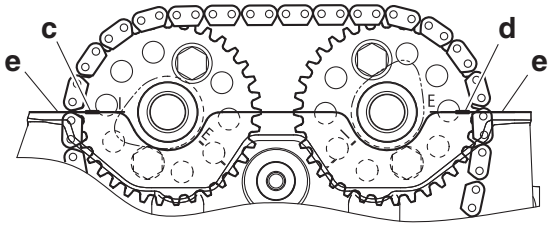

▲▲▲▲▲▲▲▲▲▲▲▲▲▲▲▲▲▲▲▲▲▲▲▲▲▲▲▲▲▲▲▲▲▲

3. Remove:
   - Timing chain tensioner “1”
   - Timing chain tensioner gasket

▼▼▼▼▼▼▼▼▼▼▼▼▼▼▼▼▼▼▼▼▼▼▼▼▼▼▼▼▼▼▼▼▼▼

a. Insert the hexagon wrench “2” (part No.: 1WS-12228-00) into the timing chain tensioner.
b. Remove the timing chain tensioner.

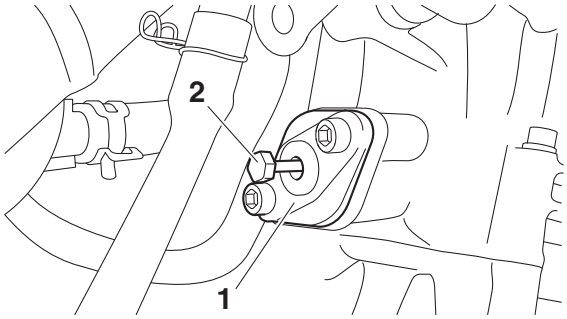

▲▲▲▲▲▲▲▲▲▲▲▲▲▲▲▲▲▲▲▲▲▲▲▲▲▲▲▲▲▲▲▲▲▲

4. Remove:
   - Intake camshaft cap “1”
   - Exhaust camshaft cap “2”

ECA13720

NOTICE

To prevent damage to the cylinder head, camshafts or camshaft caps, loosen the camshaft cap bolts in stages and in a criss-cross pattern, working from the outside in.

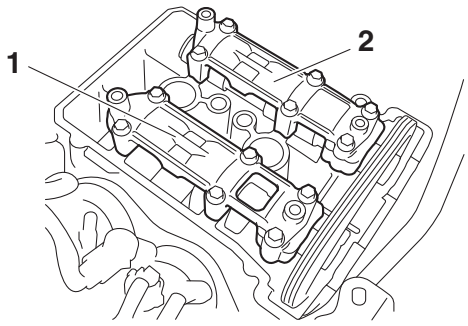

5. Remove:
   - Intake camshaft “1”
   - Exhaust camshaft “2”

TIP

To prevent the timing chain from falling into the crankcase, fasten it with a wire “3”.

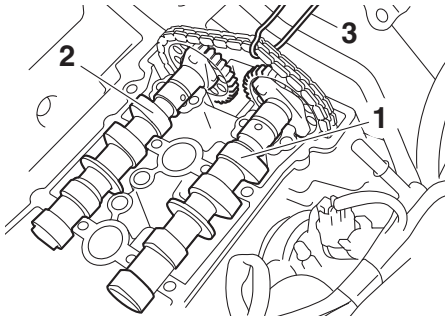

6. Remove:
   • Camshaft sprocket “1”

TIP

While holding the camshaft sprocket with the rotor holding tool “2”, loosen the camshaft sprocket bolts in the proper sequence as shown.

Rotor holding tool
90890-01235
Universal magneto and rotor holder
YU-01235

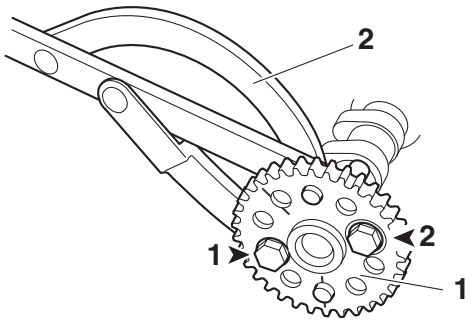

EAS30257

CHECKING THE CAMSHAFTS

1. Check:
   • Camshaft lobes
   Blue discoloration/pitting/scratches → Replace the camshaft.
2. Measure:
   • Camshaft lobe dimensions “a” and “b”
   Out of specification → Replace the camshaft.

Camshaft lobe dimensions
Lobe height (Intake)
32.650–32.750 mm (1.2854–1.2894 in)
Limit
32.550 mm (1.2815 in)
Base circle diameter (Intake)
24.972–25.072 mm (0.9831–0.9871 in)
Limit
24.872 mm (0.9792 in)
Lobe height (Exhaust)
30.750–30.850 mm (1.2106–1.2146 in)
Limit
30.650 mm (1.2067 in)
Base circle diameter (Exhaust)
25.027–25.127 mm (0.9853–0.9893 in)
Limit
24.927 mm (0.9814 in)

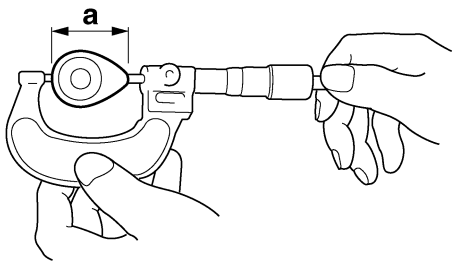

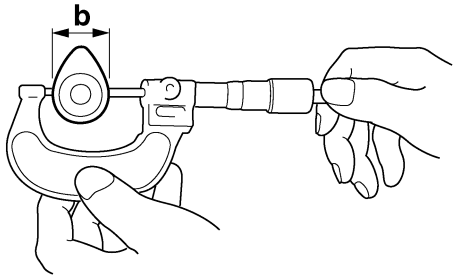

3. Measure:
   • Camshaft runout
   Out of specification → Replace.

Camshaft runout limit
0.030 mm (0.0012 in)

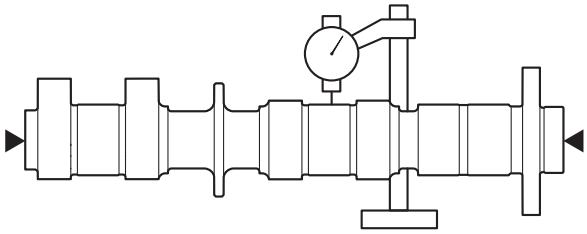

4. Measure:
   • Camshaft-journal-to-camshaft-cap clearance
   Out of specification → Measure the camshaft journal diameter.

Camshaft-journal-to-camshaft-cap clearance
0.028–0.062 mm (0.0011–0.0024 in)

▼▼▼▼▼▼▼▼▼▼▼▼▼▼▼▼▼▼▼▼▼▼▼▼▼▼▼▼▼▼▼▼▼▼

a. Install the camshafts into the cylinder head (without the camshaft caps).
b. Position a strip of Plastigauge® “1” onto the camshaft journal as shown.

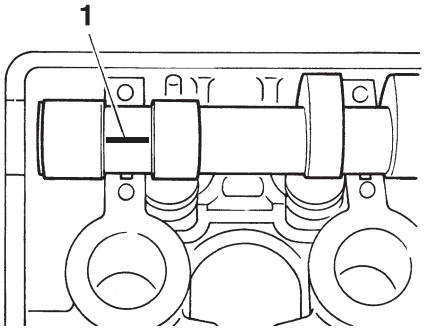

c. Install the camshaft caps.

TIP

- Tighten the camshaft cap bolts in the tightening sequence as shown.
- Do not turn the camshaft when measuring the camshaft journal-to-camshaft cap clearance with the Plastigauge®.

Camshaft cap bolt
10 Nm (1.0 m·kgf, 7.2 ft·lbf)

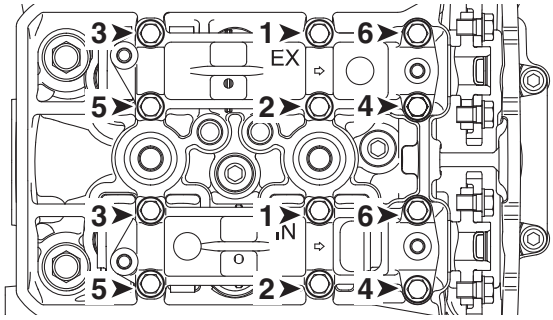

d. Remove the camshaft caps, and then measure the width of the Plastigauge® "1".

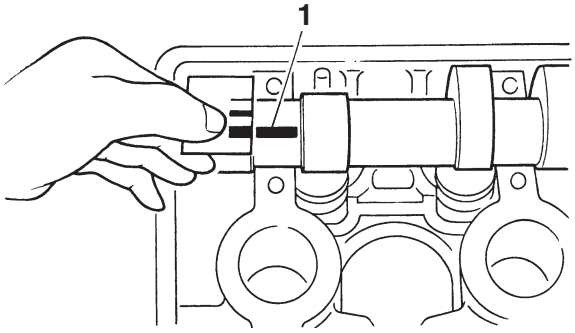

▲▲▲▲▲▲▲▲▲▲▲▲▲▲▲▲▲▲▲▲▲▲▲▲▲▲▲▲▲▲▲▲▲▲

5. Measure:
   - Camshaft journal diameter "a"
     Out of specification → Replace the camshaft.
     Within specification → Replace the cylinder head and camshaft caps as a set.

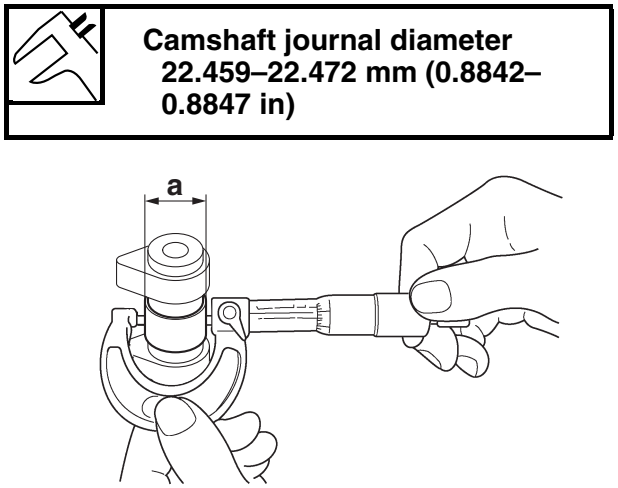

Camshaft journal diameter
22.459–22.472 mm (0.8842–0.8847 in)

EAS30936

CHECKING THE CAMSHAFT SPROCKETS

1. Check:
   - Camshaft sprocket
     More than 1/4 tooth wear "a" → Replace the camshaft sprockets and timing chain as a set.

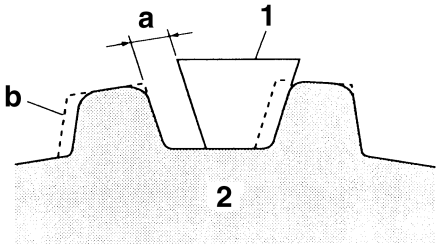

a. 1/4 tooth
b. Correct
1. Timing chain
2. Camshaft sprocket

EAS30266

CHECKING THE TIMING CHAIN TENSIONER

1. Check:
   - Timing chain tensioner
     Cracks/damage/rough movement → Replace.

▼▼▼▼▼▼▼▼▼▼▼▼▼▼▼▼▼▼▼▼▼▼▼▼▼▼▼▼▼▼▼▼▼▼

a. Lightly press the timing chain tensioner rod into the timing chain tensioner housing by hand.

TIP

While pressing the timing chain tensioner rod, wind it counterclockwise with a hexagon wrench "1" (Part No.: 1WS-12228-00) until it stops.

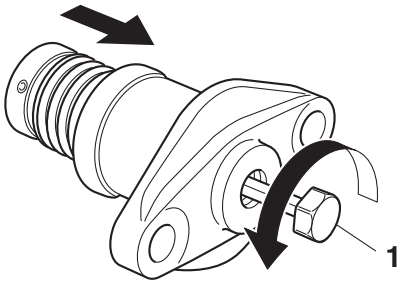

b. Make sure that the timing chain tensioner rod moves in and out of the timing chain tensioner housing smoothly. If there is rough movement, replace the timing chain tensioner.

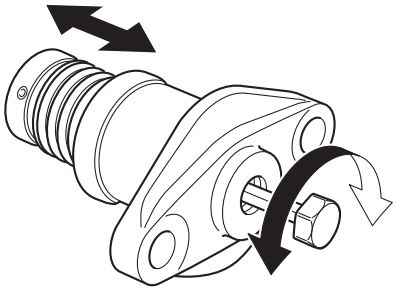

▲▲▲▲▲▲▲▲▲▲▲▲▲▲▲▲▲▲▲▲▲▲▲▲▲▲▲▲▲▲▲▲

EAS30269

INSTALLING THE CAMSHAFTS

1. Align:
   - Marks “a” on the generator rotor (with the slots “b” in the generator rotor cover)

▼▼▼▼▼▼▼▼▼▼▼▼▼▼▼▼▼▼▼▼▼▼▼▼▼▼▼▼▼▼▼▼

a. Turn the crankshaft counterclockwise.
b. Position the marks “a” on the generator rotor on both sides of the slots “b” in the generator rotor cover.

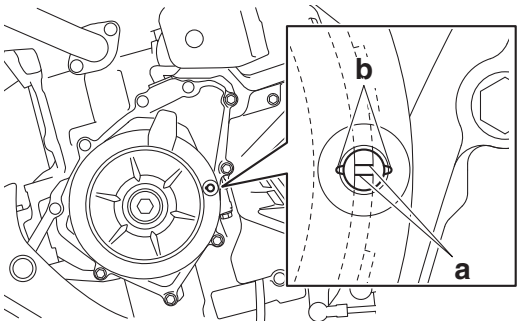

▲▲▲▲▲▲▲▲▲▲▲▲▲▲▲▲▲▲▲▲▲▲▲▲▲▲▲▲▲▲▲▲

2. Install:
   - Intake camshaft sprocket “1”
   - Exhaust camshaft sprocket “2”

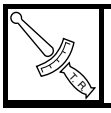	**Camshaft sprocket bolt** **20 Nm (2.0 m·kgf, 14 ft·lbf)**

TIP

- Install the camshaft sprockets so that cam lobe #1 “a” and cam lobe #2 “b” are positioned as shown in the illustration.
- Tighten the camshaft sprocket bolts with the rotor holding tool “3”. Tighten the camshaft sprocket bolt identified by the round mark “c” on each camshaft sprocket first.

	Rotor holding tool **90890-01235** **Universal magneto and rotor holder** **YU-01235**

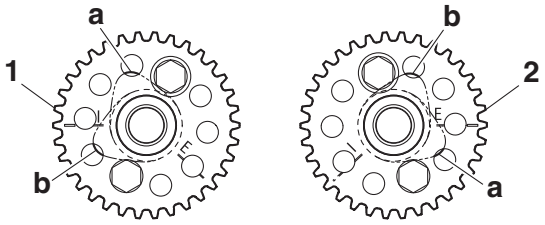

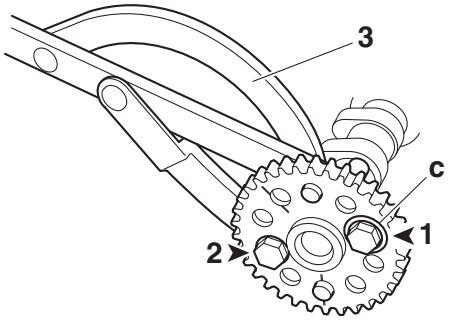

3. Install:
   - Timing chain “1” (onto the camshaft sprockets “2”)
   - Exhaust camshaft “3”
   - Intake camshaft “4”

TIP

The exhaust camshaft is identified by the groove “a” in the portion of the camshaft shown in the illustration.

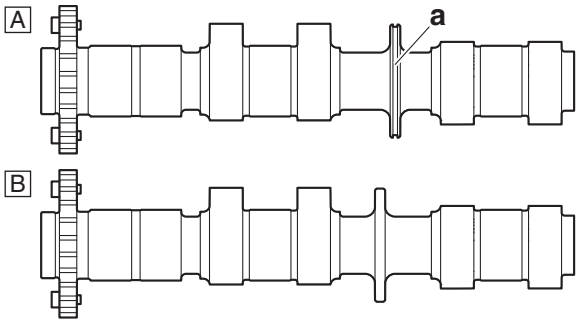

A. Exhaust camshaft
B. Intake camshaft

▼▼▼▼▼▼▼▼▼▼▼▼▼▼▼▼▼▼▼▼▼▼▼▼▼▼▼▼▼▼▼▼▼▼

a. Install the timing chain onto the exhaust camshaft sprocket, and then install the exhaust camshaft onto the cylinder head.

TIP

Align the alignment mark “b” on the exhaust camshaft sprocket with the edge “c” of the cylinder head as shown in the illustration.

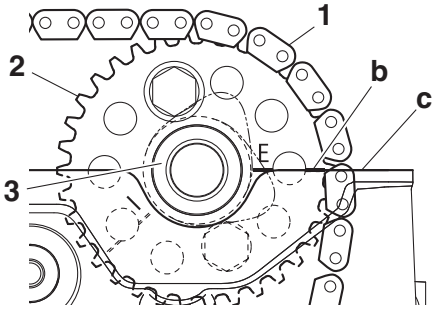

b. Install the timing chain onto the intake camshaft sprocket, and then install the intake camshaft onto the cylinder head.

TIP

- Align the alignment mark “d” on the intake camshaft sprocket with the edge “e” of the cylinder head as shown in the illustration.
- Be sure to install the timing chain so that the exhaust side of the chain is taut and the intake side is slack.

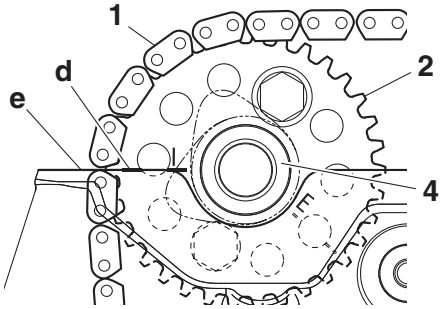

▲▲▲▲▲▲▲▲▲▲▲▲▲▲▲▲▲▲▲▲▲▲▲▲▲▲▲▲▲▲▲▲▲▲

4. Install:
   - Exhaust camshaft cap “1”
   - Intake camshaft cap “2”

TIP

- Make sure each camshaft cap is installed in its original place. Refer to the identification marks as follows:
  “EX”: Exhaust camshaft cap mark “a”
  “IN”: Intake camshaft cap mark “b”
- Make sure the arrow mark “c” on each camshaft cap points toward the right side of the engine.

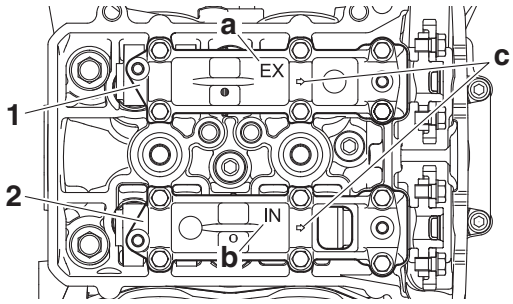

5. Tighten:
   - Camshaft cap bolts

	Camshaft cap bolt **10 Nm (1.0 m·kgf, 7.2 ft·lbf)**

ECA20930

NOTICE

- **Lubricate the camshaft cap bolts with the engine oil.**
- **The camshaft cap bolts must be tightened evenly or damage to the cylinder head, camshaft caps, and camshafts will result.**
- **Do not turn the crankshaft when installing the camshaft to avoid damage or improper valve timing.**

TIP

Tighten the camshaft cap bolts in the tightening sequence as shown.

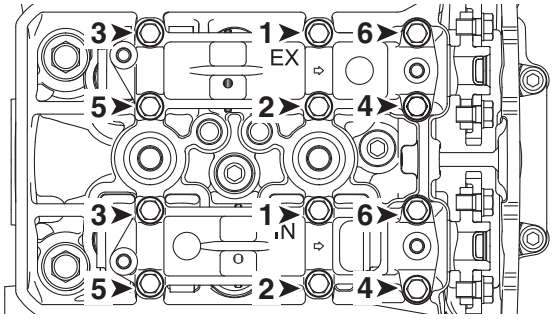

6. Install:
   - Timing chain tensioner gasket New
   - Timing chain tensioner

▼▼▼▼▼▼▼▼▼▼▼▼▼▼▼▼▼▼▼▼▼▼▼▼▼▼▼▼▼▼▼▼▼▼▼▼▼▼

a. While lightly pressing the timing chain tensioner rod by hand, turn the timing chain tensioner rod fully counterclockwise with a hexagon wrench “1” (Part No.: 1WS-12228-00).

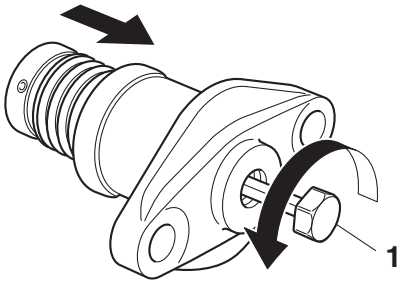

b. Install a new timing chain tensioner gasket, the timing chain tensioner “3”, and the timing chain tensioner bolts “4” on the cylinder head.

TIP

Be sure to install the timing chain tensioner gasket so that the portion “a” of the gasket is protruding from the lower inner side of the timing chain tensioner.

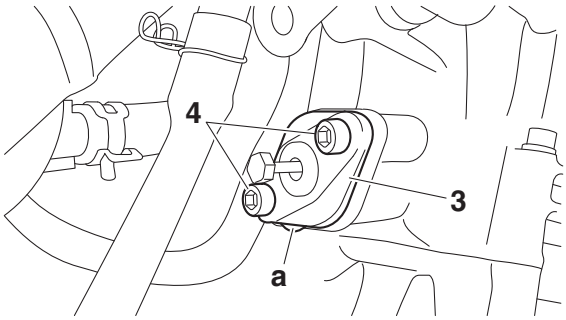

c. Tighten the timing chain tensioner bolts to specification.

	Timing chain tensioner bolt 10 Nm (1.0 m·kgf, 7.2 ft·lbf)

d. Screw the hexagon wrench by hand until the timing chain tensioner rod touches the timing chain guide, and then tighten 1/4 turn by tool.

TIP

The timing chain tensioner rod is extended by turning the hexagon wrench clockwise.

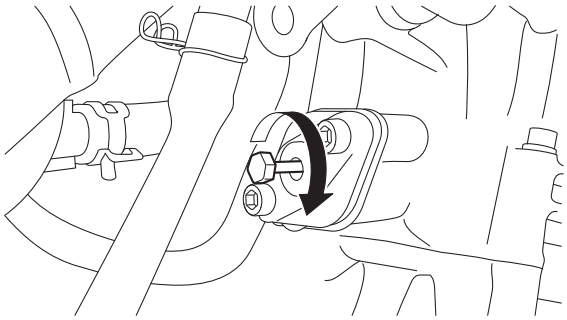

e. Remove the hexagon wrench.

TIP

Pull out the hexagon wrench without turning it.

f. Install the timing chain tensioner cap bolt and new gasket, and then tighten the timing chain tensioner cap bolt to specification.

	Timing chain tensioner cap bolt 7 Nm (0.7 m·kgf, 5.1 ft·lbf)

▲▲▲▲▲▲▲▲▲▲▲▲▲▲▲▲▲▲▲▲▲▲▲▲▲▲▲▲▲▲▲▲▲▲▲▲▲▲

7. Turn:
   - Crankshaft
     (several turns counterclockwise)
8. Check:
   - Marks “a”
     Make sure the marks “a” on the generator rotor is aligned with the slots “b” in the generator rotor cover.
   - Camshaft sprocket match mark “c”
     Make sure the match marks “c” on the camshaft sprockets are aligned with the cylinder head mating surface “d”.
     Out of alignment → Adjust.
     Refer to the installation steps above.
   - Timing chain guide
     Make sure that the timing chain guide and timing chain are positioned correctly.

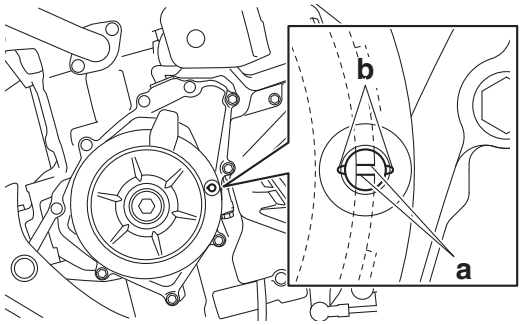

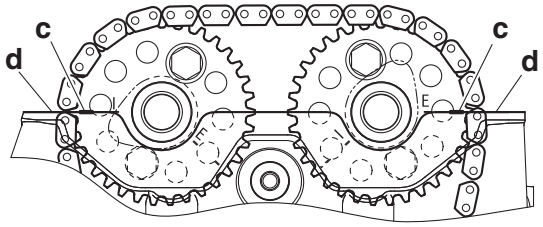

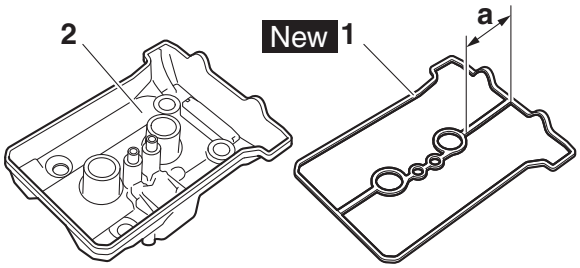

9. Measure:
   - Valve clearance
     Out of specification → Adjust.
     Refer to “ADJUSTING THE VALVE CLEARANCE” on page 3-5.
10. Install:
   - Timing mark accessing bolt “1”

	Timing mark accessing bolt **10 Nm (1.0 m·kgf, 7.2 ft·lbf)**

   - Crankshaft end cover “2”

	Crankshaft end cover **2.0 Nm (0.20 m·kgf, 1.4 ft·lbf)**

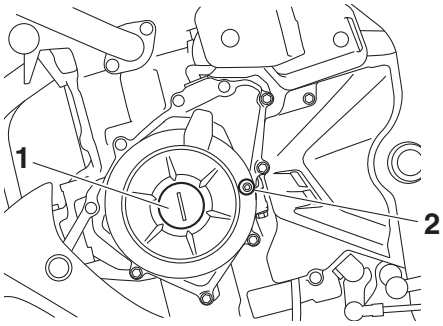

EAS30274

INSTALLING THE CYLINDER HEAD COVER

1. Install:
   - Cylinder head cover gasket “1” New
     (to the cylinder head cover “2”)

TIP

After installing the cylinder head cover gasket to the cylinder head cover, cut off the “a” section.

EAS20044

CYLINDER HEAD

Removing the cylinder head

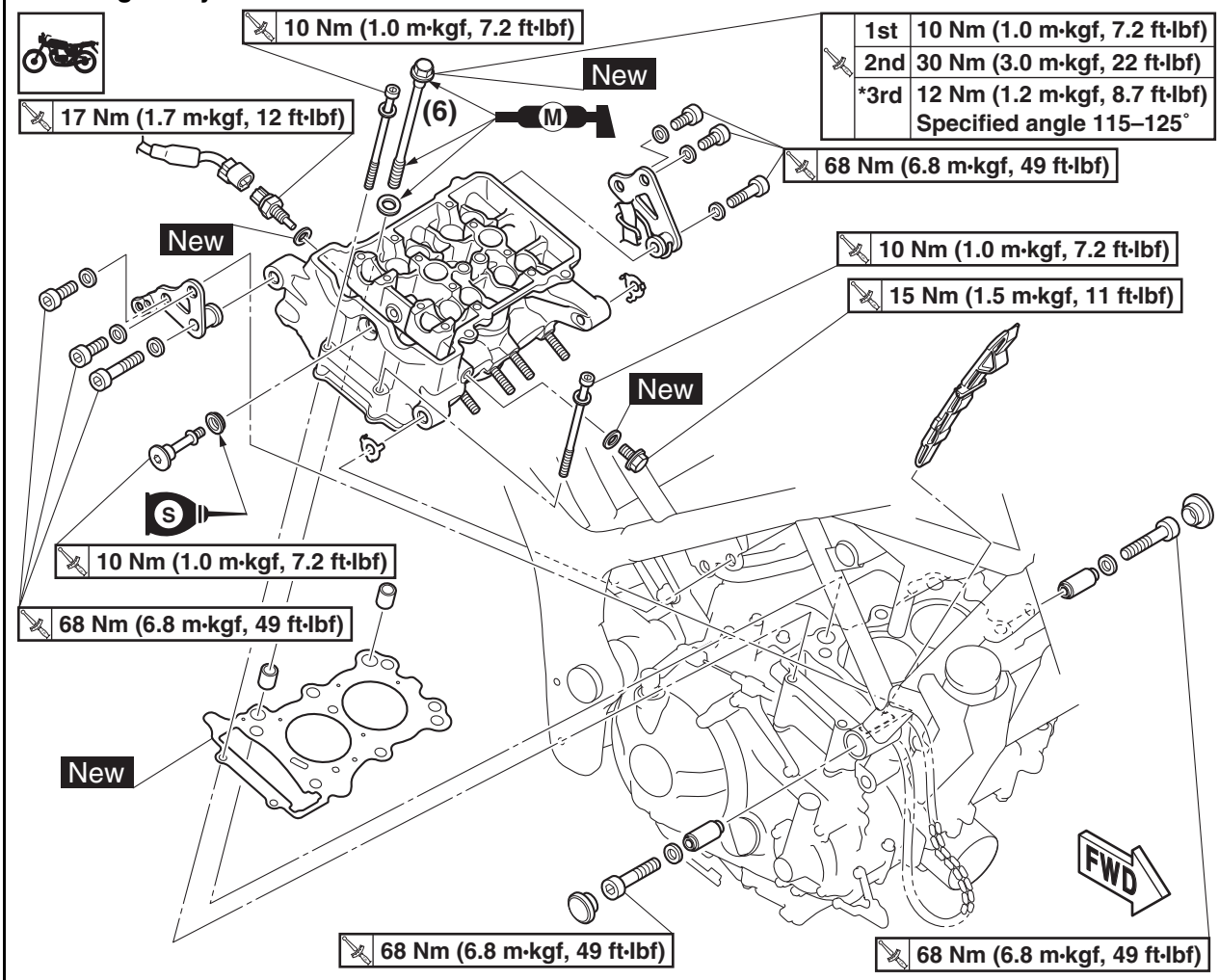

*** Following the tightening order, loosen the bolt one by one, and then retighten it to the specific torque (after loosening a bolt, retighten it before loosening the next bolt).**

Order	Job/Parts to remove	Q'ty	Remarks
	Rider seat		Refer to "GENERAL CHASSIS (1)" on page 4-1.
	Side panel assemblies		Refer to "GENERAL CHASSIS (2)" on page 4-3.
	Fuel tank cover assembly/Bottom cowling		Refer to "GENERAL CHASSIS (3)" on page 4-8.
	Fuel tank		Refer to "FUEL TANK" on page 7-1.
	Air filter case		Refer to "GENERAL CHASSIS (5)" on page 4-15.
	Throttle bodies		Refer to "THROTTLE BODIES" on page 7-5.
	Coolant reservoir		Refer to "RADIATOR" on page 6-1.
	Footrest assembly (right)		Refer to "REAR BRAKE" on page 4-47.

Removing the cylinder head

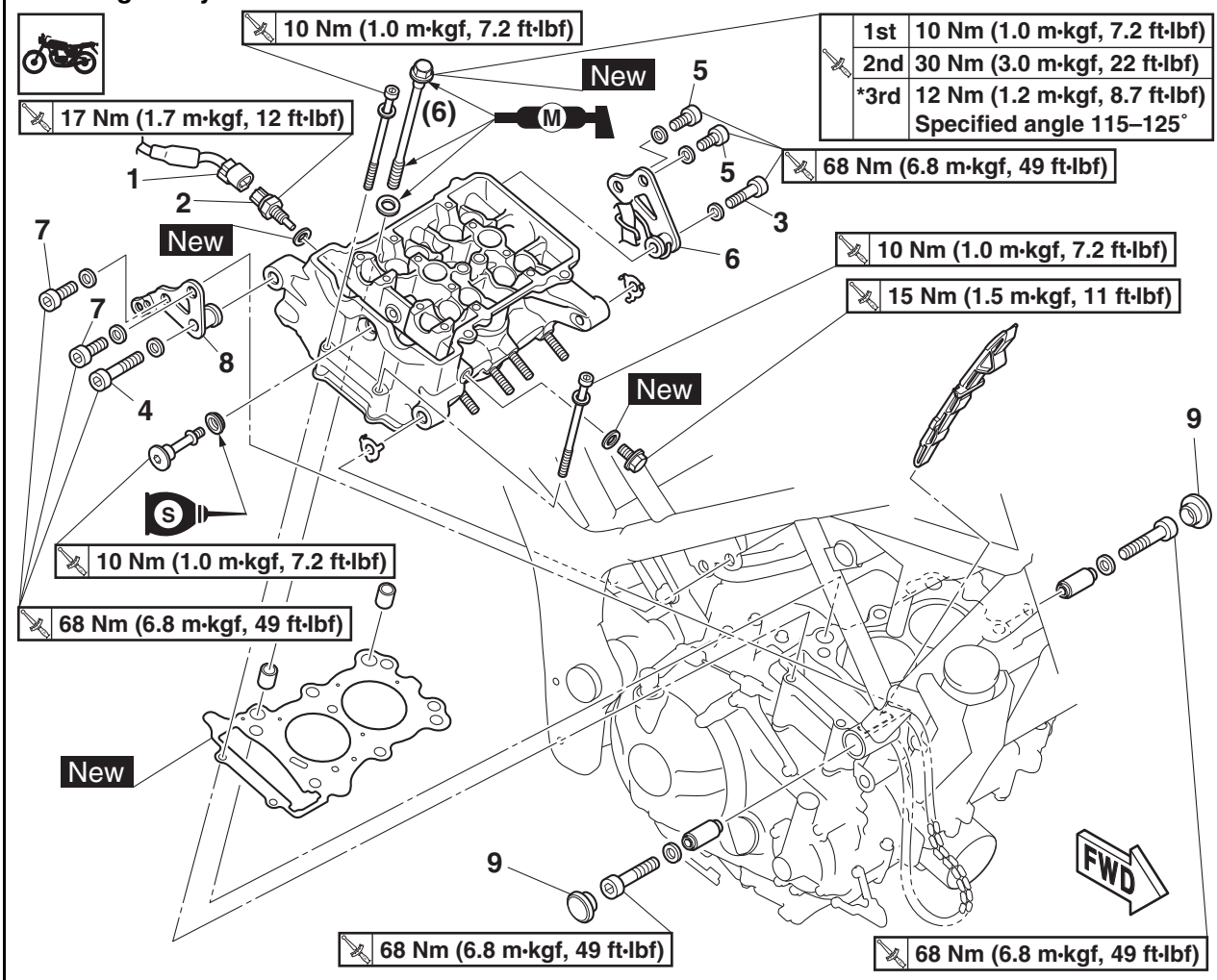

*** Following the tightening order, loosen the bolt one by one, and then retighten it to the specific torque (after loosening a bolt, retighten it before loosening the next bolt).**

Order	Job/Parts to remove	Q'ty	Remarks
	Footrest assembly (right)		Refer to "REAR BRAKE" on page 4-47.
	Muffler assembly/exhaust pipe		Refer to "ENGINE REMOVAL" on page 5-3.
	Air cut-off valve/Reed valve		Refer to "AIR INDUCTION SYSTEM" on page 7-15.
	Cylinder head cover/Intake camshaft/Exhaust camshaft		Refer to "CAMSHAFTS" on page 5-13.
	Thermostat		Refer to "THERMOSTAT" on page 6-5.
1	Coolant temperature sensor coupler	1	Disconnect.
2	Coolant temperature sensor	1	
3	Engine mounting bolt (left upper side)	1	
4	Engine mounting bolt (right upper side)	1	
5	Engine bracket bolt (left)	2	
6	Engine bracket (left)	1	
7	Engine bracket bolt (right)	2	
8	Engine bracket (right)	1	
9	Engine mounting bolt cap	2	

Removing the cylinder head

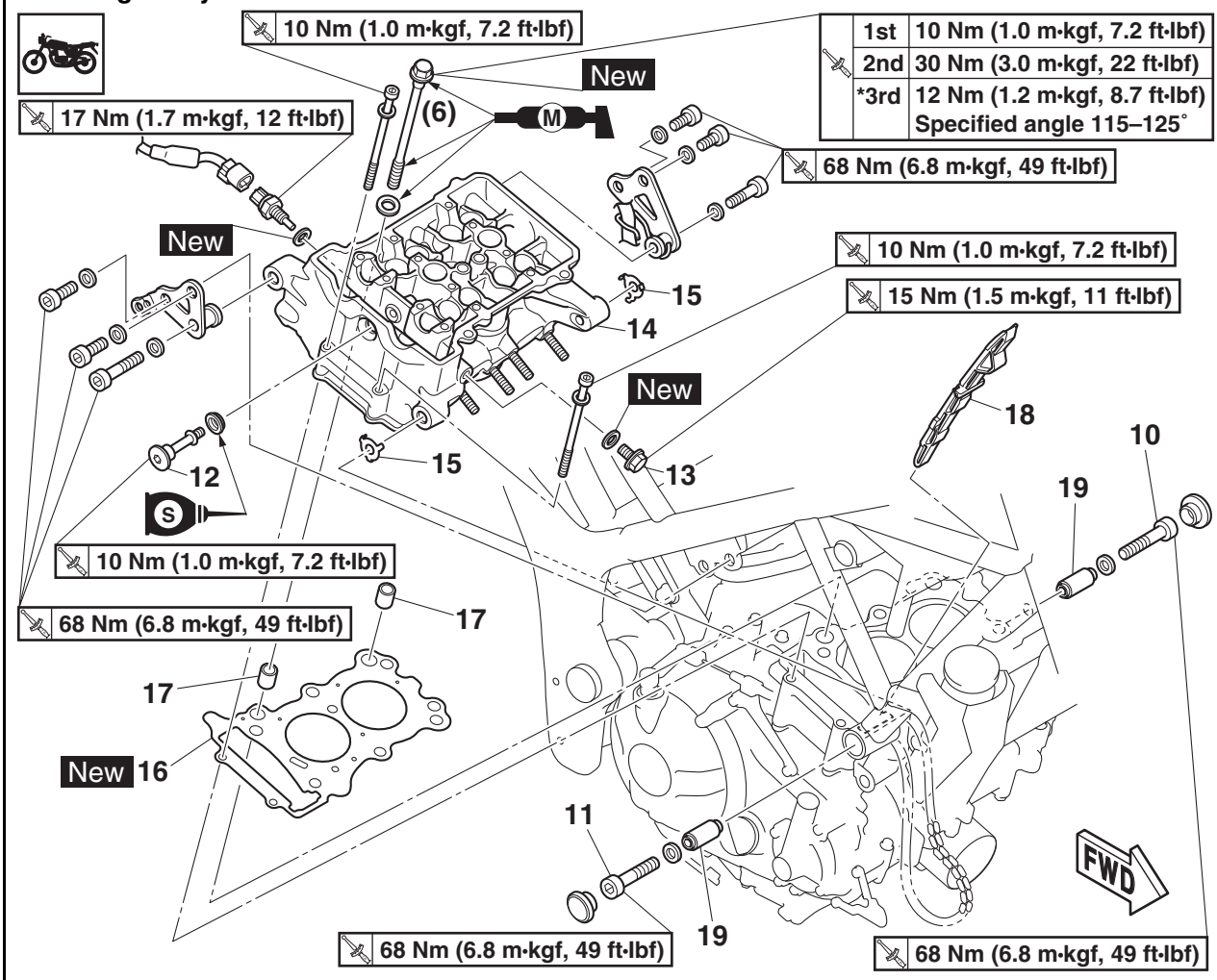

*** Following the tightening order, loosen the bolt one by one, and then retighten it to the specific torque (after loosening a bolt, retighten it before loosening the next bolt).**

Order	Job/Parts to remove	Q'ty	Remarks
10	Engine mounting bolt (left front side)	1	
11	Engine mounting bolt (right front side)	1	
12	Timing chain bolt (right side of cylinder head)	1	
13	Engine oil check bolt	1	
14	Cylinder head	1	
15	Plate	2	
16	Cylinder head gasket	1	
17	Dowel pin	2	
18	Timing chain guide (exhaust side)	1	
19	Bushing	2	

EAS30276
REMOVING THE CYLINDER HEAD

1. Remove:
   - Cylinder head bolt (M6) (×2)
   - Cylinder head bolt (M10) (×6)

TIP

- Loosen the bolts in the proper sequence as shown.
- Loosen each bolt 1/2 of a turn at a time. After all of the bolts are fully loosened, remove them.

   - M6 × 105 mm: “1”, “2”
   - M10 × 142 mm: “3”–“8”

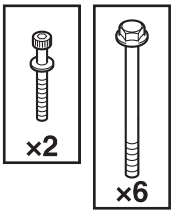

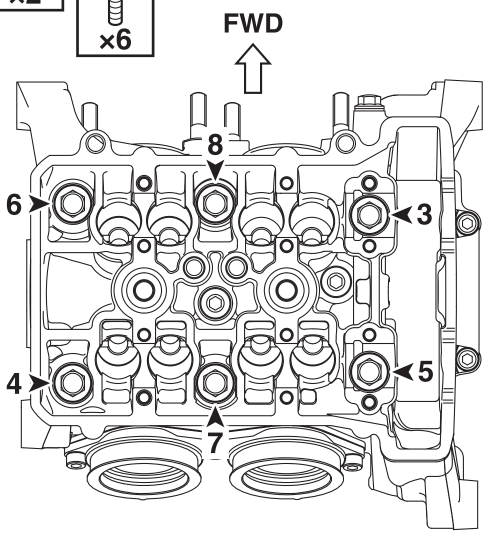

EAS30278
CHECKING THE TIMING CHAIN GUIDE (EXHAUST SIDE)

1. Check:
   - Timing chain guide (exhaust side)
     Damage/wear → Replace.

EAS30277
CHECKING THE CYLINDER HEAD

1. Eliminate:
   - Combustion chamber carbon deposits
     (with a rounded scraper)

TIP

Do not use a sharp instrument to avoid damaging or scratching:
- Spark plug bore threads
- Valve seats

2. Check:
   - Cylinder head
     Damage/scratches → Replace.
   - Cylinder head water jacket
     Mineral deposits/rust → Eliminate.
3. Measure:
   - Cylinder head warpage
     Out of specification → Resurface the cylinder head.

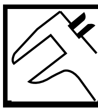

Warpage limit
0.05 mm (0.0020 in)

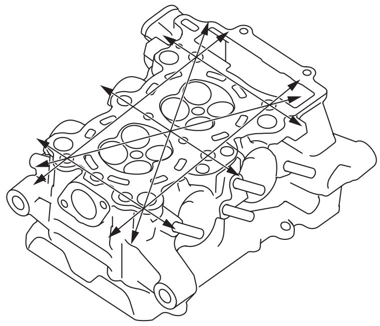

▼▼▼▼▼▼▼▼▼▼▼▼▼▼▼▼▼▼▼▼▼▼▼▼▼▼▼▼▼▼▼▼▼▼

a. Place a straightedge “1” and a thickness gauge “2” across the cylinder head.

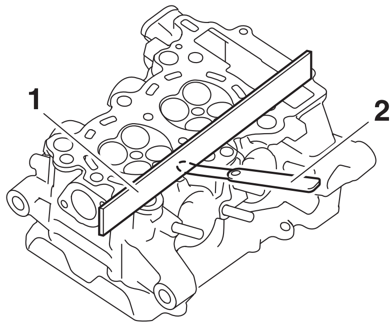

b. Measure the warpage.
c. If the limit is exceeded, resurface the cylinder head as follows.
d. Place a 400–600 grit wet sandpaper on the surface plate and resurface the cylinder head using a figure-eight sanding pattern.

TIP

To ensure an even surface, rotate the cylinder head several times.

▲▲▲▲▲▲▲▲▲▲▲▲▲▲▲▲▲▲▲▲▲▲▲▲▲▲▲▲▲▲▲▲▲▲

EAS30282
INSTALLING THE CYLINDER HEAD

1. Install:
   - Bushings “1”
   - Engine mounting bolt caps “2”

TIP

- Make sure that the edge “a” of each bushing is aligned with the edge “b” of the frame as shown in the illustration.

- Align the projection “c” on the engine mounting bolt cap with the portion “d” of the front cowling assembly stay.

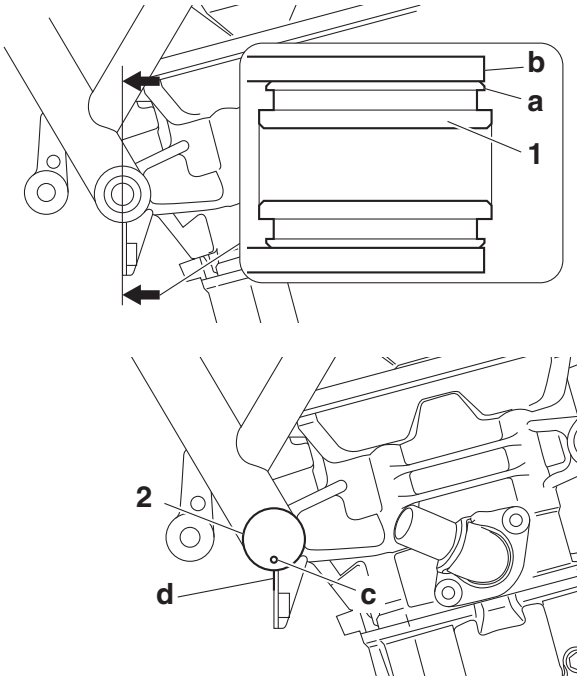

2. Install:
   - Cylinder head
   - Cylinder head bolt (M10) (×6) New
   - Cylinder head bolt (M6) (×2)

TIP

- Pass the timing chain through the timing chain cavity.
- Lubricate the cylinder head bolt (M10) threads and mating surface with molybdenum disulfide grease.

3. Tighten:
   - Cylinder head bolts “1”–“6”
   - Cylinder head bolts “7”, “8”

Cylinder head bolt (“1”–“6”)
1st: 10 Nm (1.0 m·kgf, 7.2 ft·lbf)
2nd: 30 Nm (3.0 m·kgf, 22 ft·lbf)
***3rd: Loosen and retighten the bolts one at a time to 12 Nm (1.2 m·kgf, 8.7 ft·lbf), and then tighten the bolts to the specified angle 115–125°.**
Cylinder head bolt (“7”, “8”)
10 Nm (1.0 m·kgf, 7.2 ft·lbf)

* After loosening a bolt, retighten it before loosening the next bolt.

ECA20890

NOTICE

Do not use a torque wrench to tighten the bolt to the specified angle.

TIP

Tighten the cylinder head bolts in the tightening sequence as shown and torque them in 3 stages.

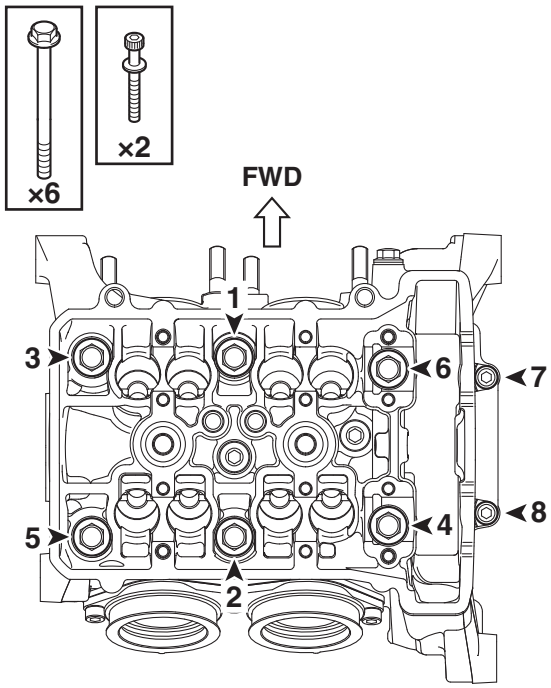

4. Install:
   - Timing chain bolt (right side of cylinder head) “1”

Timing chain bolt (right side of cylinder head)
10 Nm (1.0 m·kgf, 7.2 ft·lbf)

TIP

Make sure that the timing chain bolt passes through the timing chain “2”.

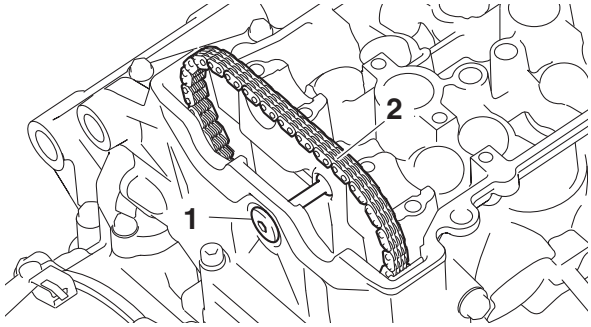

EAS20045

VALVES AND VALVE SPRINGS

Removing the valves and valve springs

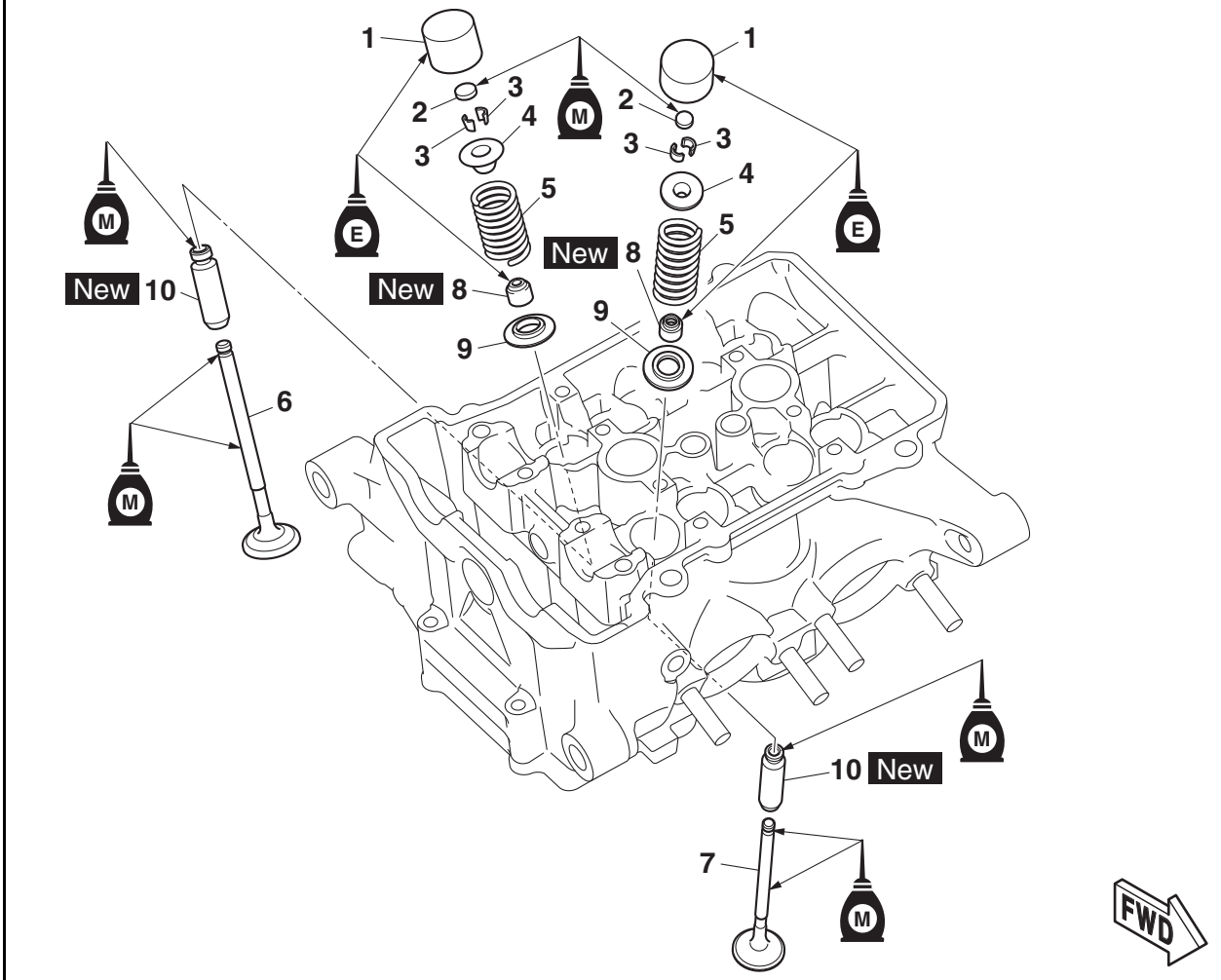

Order	Job/Parts to remove	Q'ty	Remarks
	Cylinder head		Refer to "CYLINDER HEAD" on page 5-22.
1	Valve lifter	8	
2	Valve pad	8	
3	Valve cotter	16	
4	Valve spring retainer	8	
5	Valve spring	8	
6	Intake valve	4	
7	Exhaust valve	4	
8	Valve stem seal	8	
9	Valve spring seat	8	
10	Valve guide	8	

EAS30283
REMOVING THE VALVES
The following procedure applies to all of the valves and related components.

TIP

Before removing the internal parts of the cylinder head (e.g., valves, valve springs, valve seats), make sure the valves properly seal.

1. Remove:
   - Valve lifter “1”
   - Valve pad “2”

TIP

Make a note of the position of each valve lifter and valve pad so that they can be reinstalled in their original place.

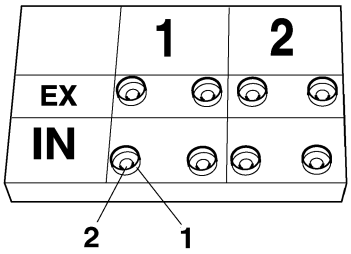

2. Check:
   - Valve sealing
     Leakage at the valve seat → Check the valve face, valve seat, and valve seat width.
     Refer to “CHECKING THE VALVE SEATS” on page 5-30.

▼▼▼▼▼▼▼▼▼▼▼▼▼▼▼▼▼▼▼▼▼▼▼▼▼▼▼▼▼▼▼▼▼▼

a. Pour a clean solvent “a” into the intake and exhaust ports.
b. Check that the valves properly seal.

TIP

There should be no leakage at the valve seat “1”.

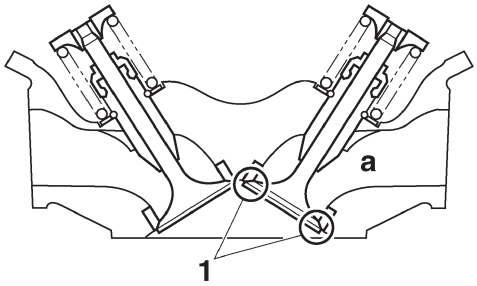

▲▲▲▲▲▲▲▲▲▲▲▲▲▲▲▲▲▲▲▲▲▲▲▲▲▲▲▲▲▲▲▲▲▲

3. Remove:
   - Valve cotters

TIP

Remove the valve cotters by compressing the valve spring with the valve spring compressor “1” and the valve spring compressor attachment “2”.

Valve spring compressor
90890-04019
Valve spring compressor
YM-04019
Valve spring compressor attachment
90890-04108
Valve spring compressor adapter 22 mm
YM-04108

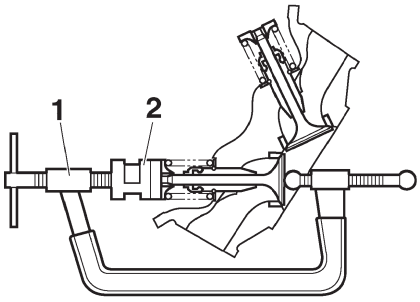

4. Remove:
   - Valve spring retainer “1”
   - Valve spring “2”
   - Valve “3”
   - Valve stem seal “4”
   - Valve spring seat “5”

TIP

Identify the position of each part very carefully so that it can be reinstalled in its original place.

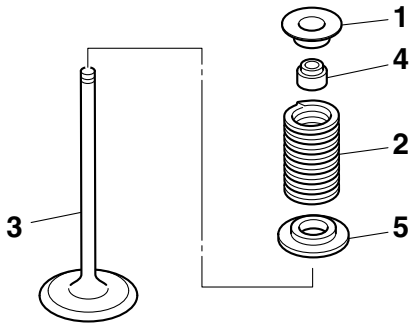

EAS30284
CHECKING THE VALVES AND VALVE GUIDES
The following procedure applies to all of the valves and valve guides.

1. Measure:
   - Valve-stem-to-valve-guide clearance
     Out of specification → Replace the valve guide.

• Valve-stem-to-valve-guide clearance = Valve guide inside diameter “a” - Valve stem diameter “b”

Valve-stem-to-valve-guide clearance (intake)
0.010–0.037 mm (0.0004–0.0015 in)
Limit
0.080 mm (0.0032 in)
Valve-stem-to-valve-guide clearance (exhaust)
0.025–0.052 mm (0.0010–0.0020 in)
Limit
0.100 mm (0.0039 in)

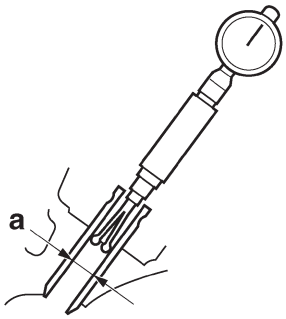

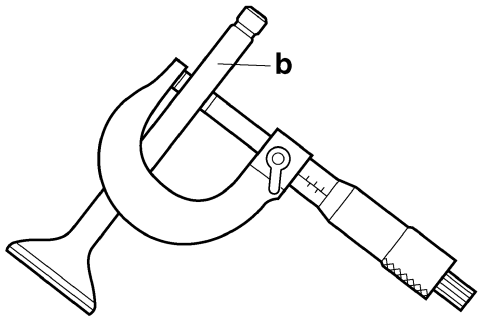

2. Replace:
   - Valve guide

TIP

To ease valve guide removal and installation, and to maintain the correct fit, heat the cylinder head to 100 °C (212 °F) in an oven.

▼▼▼▼▼▼▼▼▼▼▼▼▼▼▼▼▼▼▼▼▼▼▼▼▼▼▼▼▼▼▼▼▼▼

a. Remove the valve guide with the valve guide remover “1”.

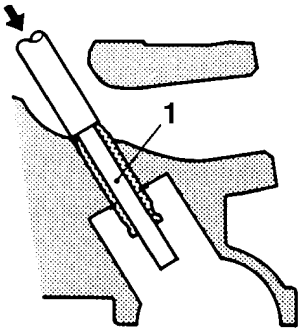

b. Install the new valve guide with the valve guide installer “2” and valve guide remover “1”.

Valve guide position
11.3–11.7 mm (0.44–0.46 in)

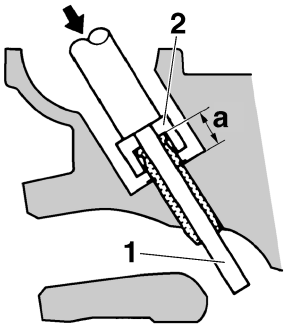

a. Valve guide position

c. After installing the valve guide, bore the valve guide with the valve guide reamer “3” to obtain the proper valve-stem-to-valve-guide clearance.

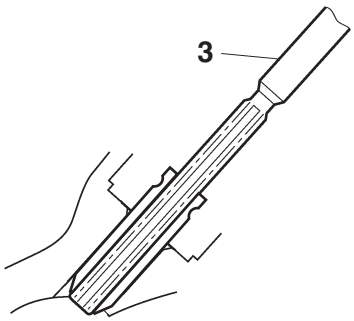

TIP

After replacing the valve guide, reface the valve seat.

Valve guide remover (ø4.5)
90890-04116
Valve guide remover (4.5 mm)
YM-04116
Valve guide installer (ø4.5)
90890-04117
Valve guide installer (4.5 mm)
YM-04117
Valve guide reamer (ø4.5)
90890-04118
Valve guide reamer (4.5 mm)
YM-04118

▲▲▲▲▲▲▲▲▲▲▲▲▲▲▲▲▲▲▲▲▲▲▲▲▲▲▲▲▲▲▲▲▲▲

3. Eliminate:
   - Carbon deposits
     (from the valve face and valve seat)
4. Check:
   - Valve face
     Pitting/wear → Grind the valve face.
   - Valve stem end
     Mushroom shape or diameter larger than the body of the valve stem → Replace the valve.
5. Measure:
   - Valve stem runout
     Out of specification → Replace the valve.

TIP

- When installing a new valve, always replace the valve guide.
- If the valve is removed or replaced, always replace the valve stem seal.

Valve stem runout
0.010 mm (0.0004 in)

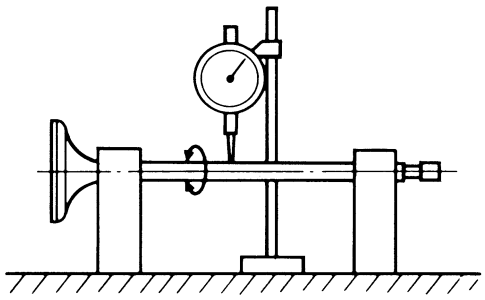

EAS30285

CHECKING THE VALVE SEATS

The following procedure applies to all of the valves and valve seats.

1. Eliminate:
   - Carbon deposits
     (from the valve face and valve seat)
2. Check:
   - Valve seat
     Pitting/wear → Replace the cylinder head.
3. Measure:
   - Valve seat width “a”
     Out of specification → Replace the cylinder head.

Valve seat contact width (intake)
0.90–1.20 mm (0.0354–0.0472 in)
Valve seat contact width (exhaust)
0.90–1.20 mm (0.0354–0.0472 in)

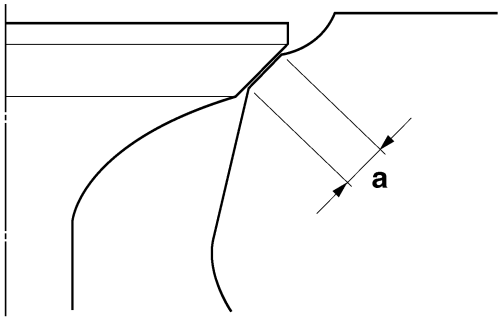

▼▼▼▼▼▼▼▼▼▼▼▼▼▼▼▼▼▼▼▼▼▼▼▼▼▼▼▼▼▼▼▼▼▼

a. Apply blue layout fluid “b” onto the valve face.

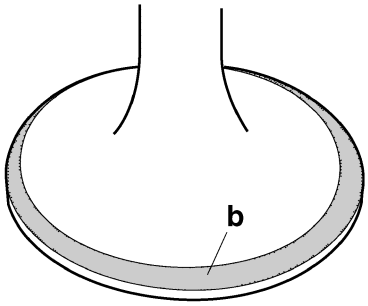

b. Install the valve into the cylinder head.
c. Press the valve through the valve guide and onto the valve seat to make a clear impression.
d. Measure the valve seat width.

TIP

Where the valve seat and valve face contacted one another, the blueing will have been removed.

▲▲▲▲▲▲▲▲▲▲▲▲▲▲▲▲▲▲▲▲▲▲▲▲▲▲▲▲▲▲▲▲▲▲

4. Lap:
   - Valve face
   - Valve seat

TIP

After replacing the cylinder head or replacing the valve and valve guide, the valve seat and valve face should be lapped.

▼▼▼▼▼▼▼▼▼▼▼▼▼▼▼▼▼▼▼▼▼▼▼▼▼▼▼▼▼▼▼▼▼▼

a. Apply a coarse lapping compound “a” to the valve face.

ECA13790

NOTICE

Do not let the lapping compound enter the gap between the valve stem and the valve guide.

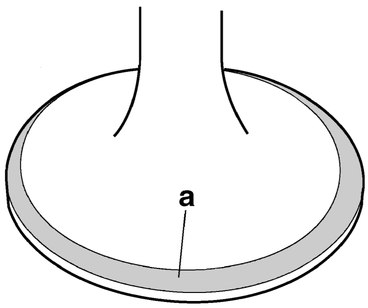

b. Apply molybdenum disulfide oil onto the valve stem.
c. Install the valve into the cylinder head.
d. Turn the valve until the valve face and valve seat are evenly polished, then clean off all of the lapping compound.

TIP

For the best lapping results, lightly tap the valve seat while rotating the valve back and forth between your hands.

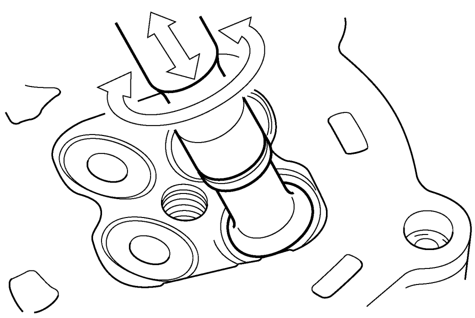

e. Apply a fine lapping compound to the valve face and repeat the above steps.
f. After every lapping procedure, be sure to clean off all of the lapping compound from the valve face and valve seat.
g. Apply blue layout fluid “b” onto the valve face.

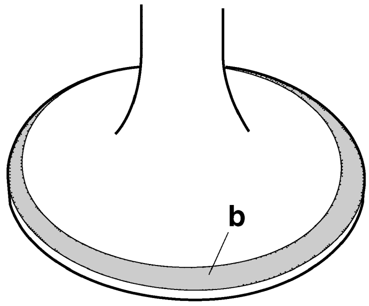

h. Install the valve into the cylinder head.
i. Press the valve through the valve guide and onto the valve seat to make a clear impression.
j. Measure the valve seat width “c” again. If the valve seat width is out of specification, reface and lap the valve seat.

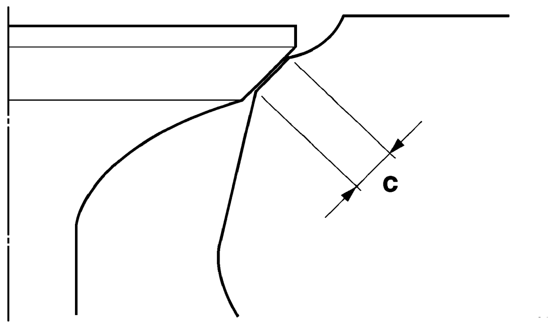

▲▲▲▲▲▲▲▲▲▲▲▲▲▲▲▲▲▲▲▲▲▲▲▲▲▲▲▲▲▲▲▲▲▲

EAS30286

CHECKING THE VALVE SPRINGS

The following procedure applies to all of the valve springs.

1. Measure:
   - Valve spring free length “a”
     Out of specification → Replace the valve spring.

Free length (intake)
38.21 mm (1.50 in)
Limit
36.30 mm (1.43 in)
Free length (exhaust)
38.21 mm (1.50 in)
Limit
36.30 mm (1.43 in)

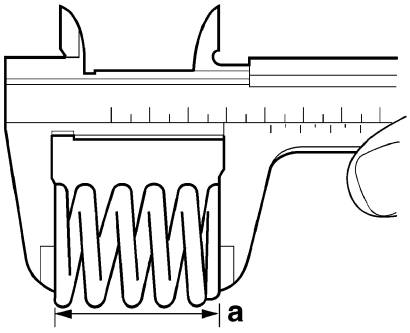

2. Measure:
   - Compressed valve spring force “a”
     Out of specification → Replace the valve spring.

	Installed compression spring force (intake) **159.60–183.60 N (16.27–18.72 kgf, 35.88–41.27 lbf)** **Installed compression spring force (exhaust)** **159.60–183.60 N (16.27–18.72 kgf, 35.88–41.27 lbf)** **Installed length (intake)** **32.00 mm (1.26 in)** **Installed length (exhaust)** **32.00 mm (1.26 in)**

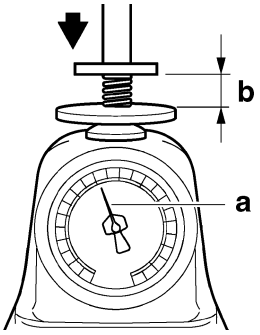

b. Installed length

3. Measure:
   - Valve spring tilt “a”
     Out of specification → Replace the valve spring.

	Spring tilt (intake) **1.7 mm (0.07 in)** **Spring tilt (exhaust)** **1.7 mm (0.07 in)**

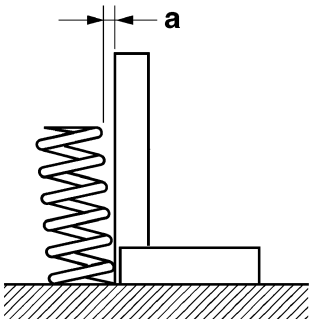

EAS30287

CHECKING THE VALVE LIFTERS

The following procedure applies to all of the valve lifters.

1. Check:
   - Valve lifter
     Damage/scratches → Replace the valve lifters and cylinder head.

EAS30288

INSTALLING THE VALVES

The following procedure applies to all of the valves and related components.

1. Deburr:
   - Valve stem end
     (with an oil stone)

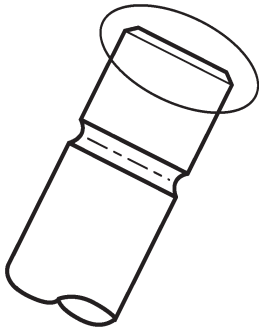

2. Lubricate:
   - Valve stem “1”
   - Valve stem end
     (with the recommended lubricant)

	Recommended lubricant **Molybdenum disulfide oil**

3. Lubricate:
   - Valve stem seal “2”
     (with the recommended lubricant)

	Recommended lubricant **Engine oil**

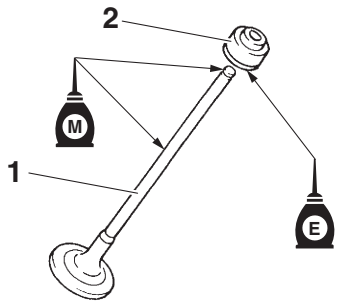

4. Install:
   - Valve spring seat “1” (into the cylinder head)
   - Valve stem seal “2” New
   - Valve “3”
   - Valve spring “4”
   - Valve spring retainer “5”

TIP

- Make sure each valve is installed in its original place.
- Install the valve springs with the larger pitch “a” facing up.

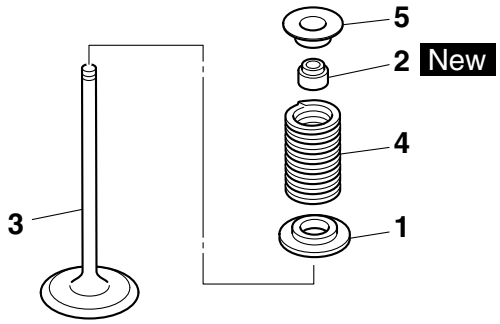

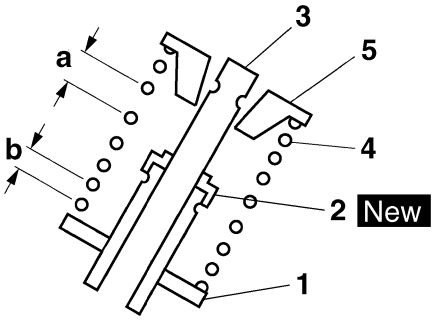

b. Smaller pitch

5. Install:
   - Valve cotters

TIP

Install the valve cotters by compressing the valve spring with the valve spring compressor “1” and the valve spring compressor attachment “2”.

Valve spring compressor
90890-04019
Valve spring compressor
YM-04019
Valve spring compressor attachment
90890-04108
Valve spring compressor adapter 22 mm
YM-04108

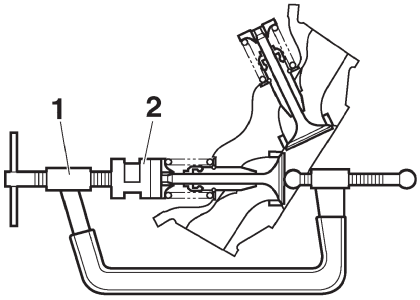

6. To secure the valve cotters onto the valve stem, lightly tap the valve tip with a soft-face hammer.

ECA13800

NOTICE

Hitting the valve tip with excessive force could damage the valve.

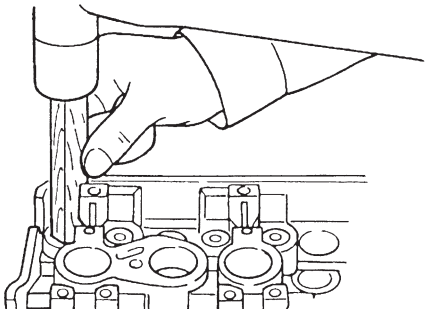

7. Lubricate:
   - Valve pad

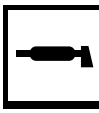

Recommended lubricant
Molybdenum disulfide oil

   - Valve lifter (with the recommended lubricant)

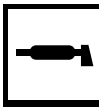

Recommended lubricant
Engine oil

8. Install:
   - Valve pad
   - Valve lifter

TIP

- The valve lifter must move smoothly when rotated with a finger.
- Each valve lifter and valve pad must be reinstalled in their original position.

EAS20046

CYLINDER AND PISTONS

Removing the cylinder and pistons

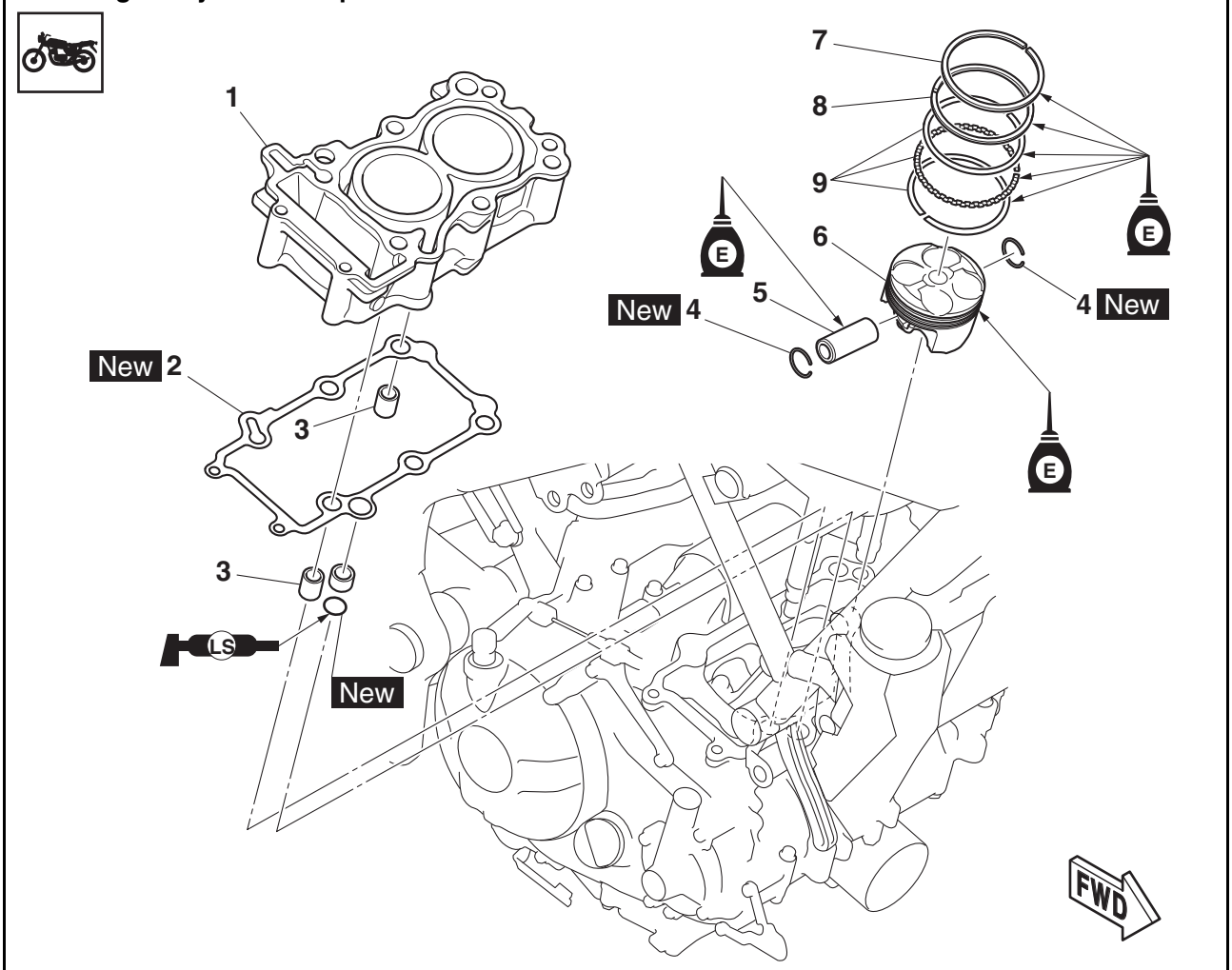

Order	Job/Parts to remove	Q'ty	Remarks
	Cylinder head		Refer to "CYLINDER HEAD" on page 5-22.
1	Cylinder	1	
2	Cylinder gasket	1	
3	Dowel pin	2	
4	Piston pin clip	4	
5	Piston pin	2	
6	Piston	2	
7	Top ring	2	
8	2nd ring	2	
9	Oil ring	2	

EAS30289
REMOVING THE PISTONS

The following procedure applies to both of the pistons.

1. Remove:
   - Piston pin clips “1”
   - Piston pin “2”
   - Piston “3”

ECA13810
NOTICE

Do not use a hammer to drive the piston pin out.

TIP

- Before removing the piston pin clips, cover the crankcase opening with a clean rag to prevent the piston pin clips from falling into the crankcase.
- For reference during installation, put an identification mark on each piston crown.
- Before removing the piston pin, deburr the piston pin clip grooves and the piston pin bore area. If both areas are deburred and the piston pin is still difficult to remove, remove it with the piston pin puller set “4”.

Piston pin puller set
90890-01304
Piston pin puller
YU-01304

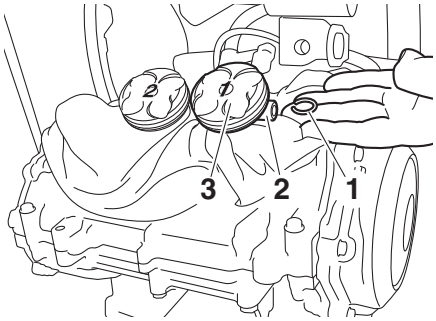

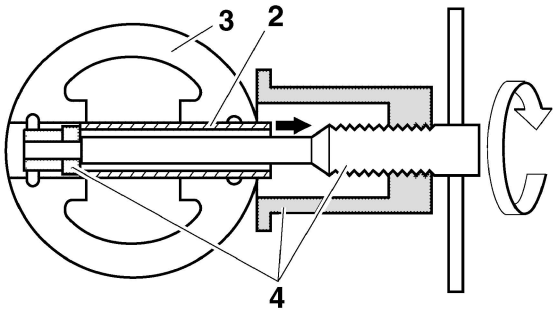

2. Remove:
   - Top ring
   - 2nd ring
   - Oil ring

TIP

When removing a piston ring, open the end gap with your fingers and lift the other side of the ring over the piston crown.

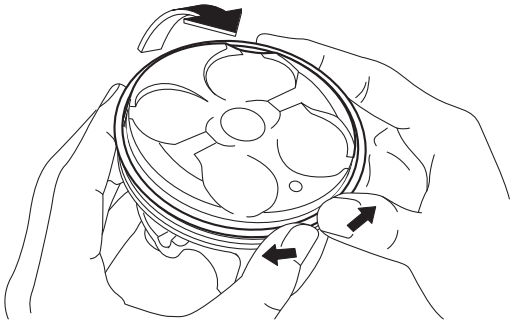

EAS30291
CHECKING THE CYLINDERS AND PISTONS

The following procedure applies to both of the cylinders and pistons.

1. Check:
   - Piston wall
   - Cylinder wall
     Vertical scratches → Rebore or replace the cylinder, and replace the piston and piston rings as a set.
2. Measure:
   - Piston-to-cylinder clearance

▼▼▼▼▼▼▼▼▼▼▼▼▼▼▼▼▼▼▼▼▼▼▼▼▼▼▼▼▼▼▼▼▼▼

a. Measure cylinder bore “C” with the cylinder bore gauge.

TIP

Measure cylinder bore “C” by taking side-to-side and front-to-back measurements of the cylinder.

Bore
68.000–68.010 mm (2.6772–2.6776 in)
Taper limit
0.050 mm (0.0020 in)
Out of round limit
0.050 mm (0.0020 in)

“C” = maximum of D_1, D_2, D_3, D_4, D_5, D_6
Taper (front-to-back) = maximum difference between D_1, D_3, D_5 Taper (side-to-side) = maximum difference between D_2, D_4, D_6
Out of round (top) = difference between D_1, D_2 Out of round (middle) = difference between D_3, D_4 Out of round (bottom) = difference between D_5, D_6

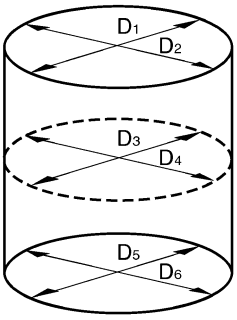

b. If out of specification, replace the cylinder, and replace the piston and piston rings as a set.
c. Measure piston skirt diameter “P” with the micrometer.

Diameter
67.962–67.985 mm (2.6757–2.6766 in)

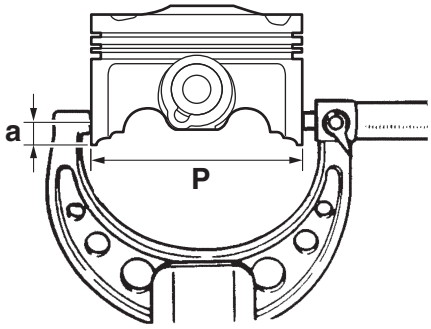

a. 7.0 mm (0.28 in) from the bottom edge of the piston

d. If out of specification, replace the piston and piston rings as a set.
e. Calculate the piston-to-cylinder clearance with the following formula.

- Piston-to-cylinder clearance = Cylinder bore “C” - Piston skirt diameter “P”

Piston-to-cylinder clearance
0.015–0.048 mm (0.0006–0.0019 in)

f. If out of specification, replace the cylinder, and replace the piston and piston rings as a set.

▲▲▲▲▲▲▲▲▲▲▲▲▲▲▲▲▲▲▲▲▲▲▲▲▲▲▲▲▲▲▲▲▲▲

EAS30292

CHECKING THE PISTON RINGS

The following procedure applies to both of the piston rings.

1. Measure:
   - Piston ring side clearance
     Out of specification → Replace the piston and piston rings as a set.

TIP

Before measuring the piston ring side clearance, eliminate any carbon deposits from the piston ring grooves and piston rings.

Piston ring
Top ring
Ring side clearance
0.030–0.065 mm (0.0012–0.0026 in)
Limit
0.115 mm (0.0045 in)
2nd ring
Ring side clearance
0.020–0.055 mm (0.0008–0.0022 in)
Limit
0.115 mm (0.0045 in)

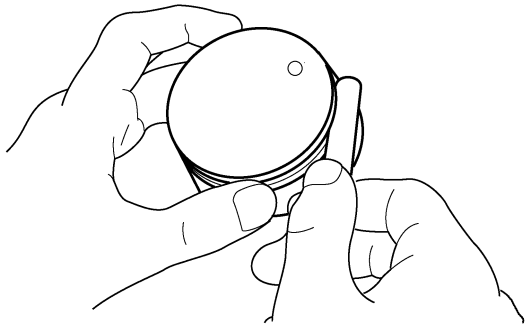

2. Install:
   - Piston ring
     (into the cylinder)

TIP

Use the piston crown to level the piston ring near the bottom of the cylinder where the cylinder wear is lowest.

3. Measure:
   - Piston ring end gap
     Out of specification → Replace the piston ring.

TIP

The oil ring expander spacer’s end gap cannot be measured. If the oil ring rail’s gap is excessive, replace all three piston rings.

Piston ring
Top ring
End gap (installed)
0.15–0.25 mm (0.0059–0.0098 in)
Limit
0.50 mm (0.0197 in)
2nd ring
End gap (installed)
0.35–0.50 mm (0.0138–0.0197 in)
Limit
0.85 mm (0.0335 in)
Oil ring
End gap (installed)
0.10–0.35 mm (0.0039–0.0138 in)

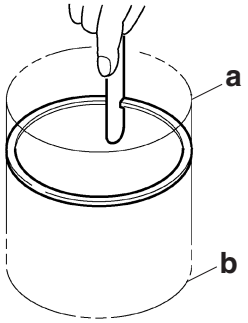

a. Bottom of cylinder
b. Upper of cylinder

EAS30293
CHECKING THE PISTON PINS

The following procedure applies to both of the piston pins.

1. Check:
   - Piston pin
     Blue discoloration/grooves → Replace the piston pin and then check the lubrication system.
2. Measure:
   - Piston pin outside diameter “a”
     Out of specification → Replace the piston pin.

Piston pin outside diameter
14.995–15.000 mm (0.5904–0.5906 in)
Limit
14.975 mm (0.5896 in)

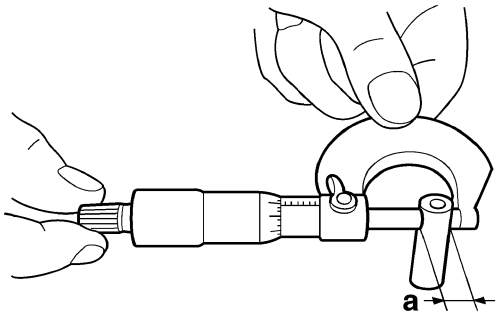

3. Measure:
   - Piston pin bore diameter “b”
     Out of specification → Replace the piston.

Piston pin bore inside diameter
15.002–15.013 mm (0.5906–0.5911 in)
Limit
15.043 mm (0.5922 in)

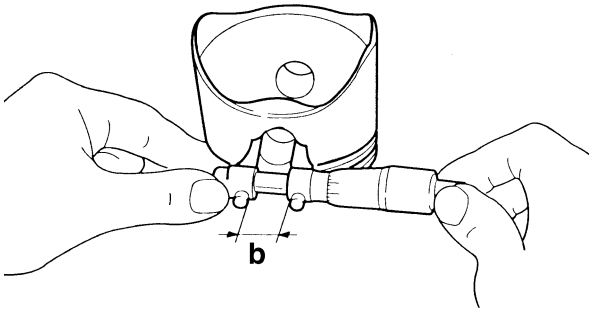

4. Calculate:
   - Piston-pin-to-piston-pin-bore clearance
     Out of specification → Replace the piston pin and piston as a set.

- Piston-pin-to-piston-pin-bore clearance = Piston pin bore inside diameter “b” - Piston pin outside diameter “a”

Piston-pin-to-piston-pin-bore clearance
0.002–0.018 mm (0.0001–0.0007 in)

EAS30294
INSTALLING THE PISTONS AND CYLINDER

The following procedure applies to both of the pistons.

1. Install:
   - Oil ring expander “1”
   - Lower oil ring rail “2”
   - Upper oil ring rail “3”
   - 2nd ring “4”
   - Top ring “5”

TIP

- Install the oil ring expander as shown in the illustration.
- Be sure to install the piston rings so that the manufacturer marks “a” face up.

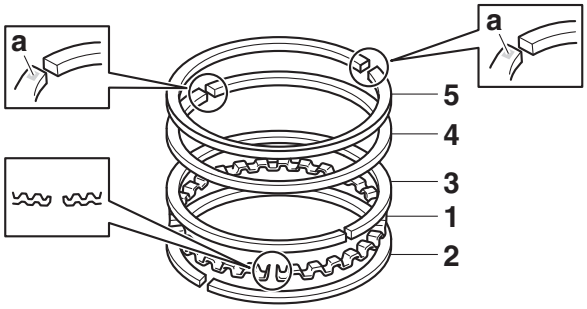

2. Install:
   - Piston “1”
   - Piston pin “2”
   - Piston pin clips “3” New

TIP

- Apply engine oil onto the piston pin.
- Make sure the punch mark “a” on the piston points towards the exhaust side of the engine.
- Before installing the piston pin clips, cover the crankcase opening with a clean rag to prevent the piston pin clips from falling into the crankcase.
- When installing a piston pin clip, make sure that the clip ends “b” are positioned away from the cutout “c” in the piston as shown in the illustration.
- Reinstall each piston into its original cylinder (numbering order starting from the left: #1 to #2).

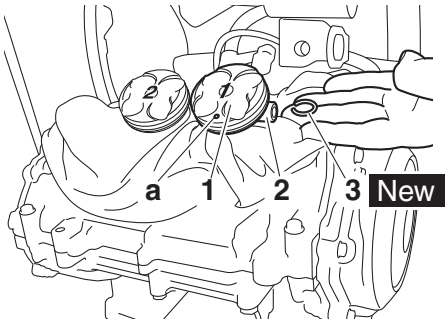

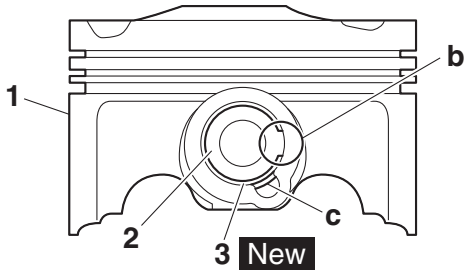

3. Lubricate:
   - Piston
   - Piston rings
   - Cylinder
     (with the recommended lubricant)

	Recommended lubricant **Engine oil**

4. Offset:
   - Piston ring end gaps

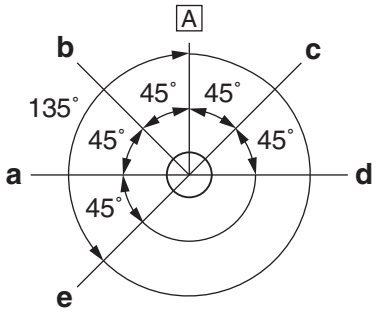

a. Top ring
b. Oil ring expander
c. Lower oil ring rail
d. 2nd ring
e. Upper oil ring rail
A. Exhaust side

5. Install:
   - Dowel pins
   - O-ring New
   - Cylinder gasket New
6. Install:
   - Cylinder “1”

TIP

- While compressing the piston rings, install the cylinder.
- Pass the timing chain and timing chain guide (intake side) through the timing chain cavity.

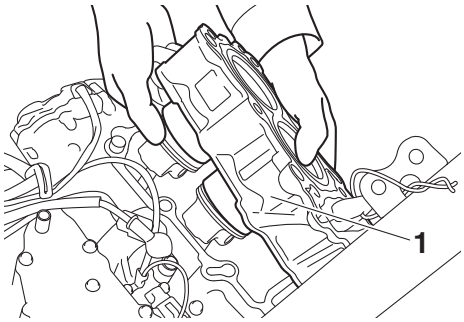
1

EAS20140

GENERATOR AND STARTER CLUTCH

Removing the stator coil, generator rotor and starter clutch

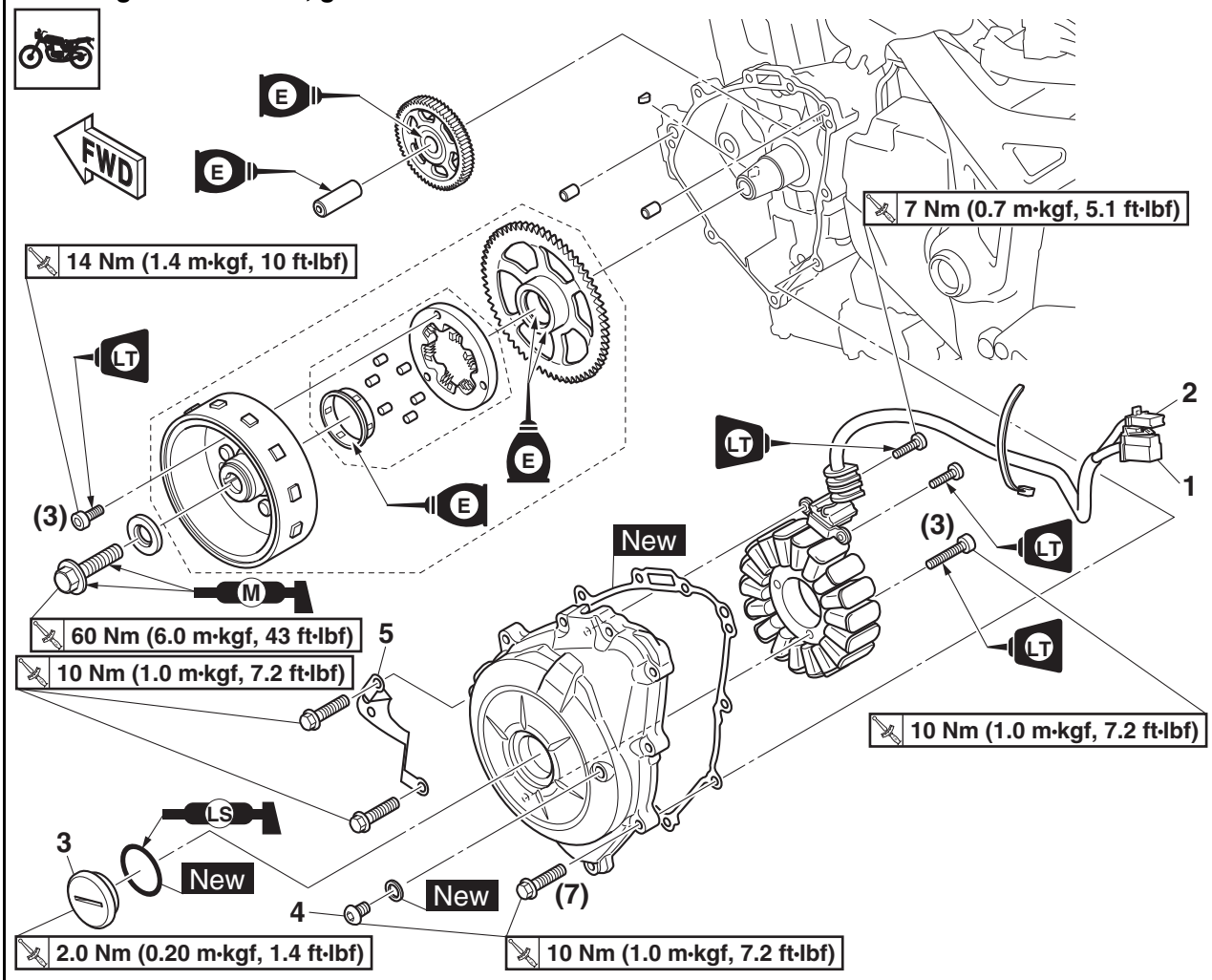

Order	Job/Parts to remove	Q'ty	Remarks
	Rider seat		Refer to "GENERAL CHASSIS (1)" on page 4-1.
	Side panel assemblies		Refer to "GENERAL CHASSIS (2)" on page 4-3.
	Bottom cowling		Refer to "GENERAL CHASSIS (3)" on page 4-8.
	Coolant reservoir		Refer to "RADIATOR" on page 6-1.
	Engine oil		Drain. Refer to "CHANGING THE ENGINE OIL" on page 3-22.
1	Stator coil coupler	1	Disconnect.
2	Crankshaft position sensor coupler	1	Disconnect.
3	Crankshaft end cover	1	
4	Timing mark accessing bolt	1	
5	Bottom cowling bracket (left)	1	

Removing the stator coil, generator rotor and starter clutch

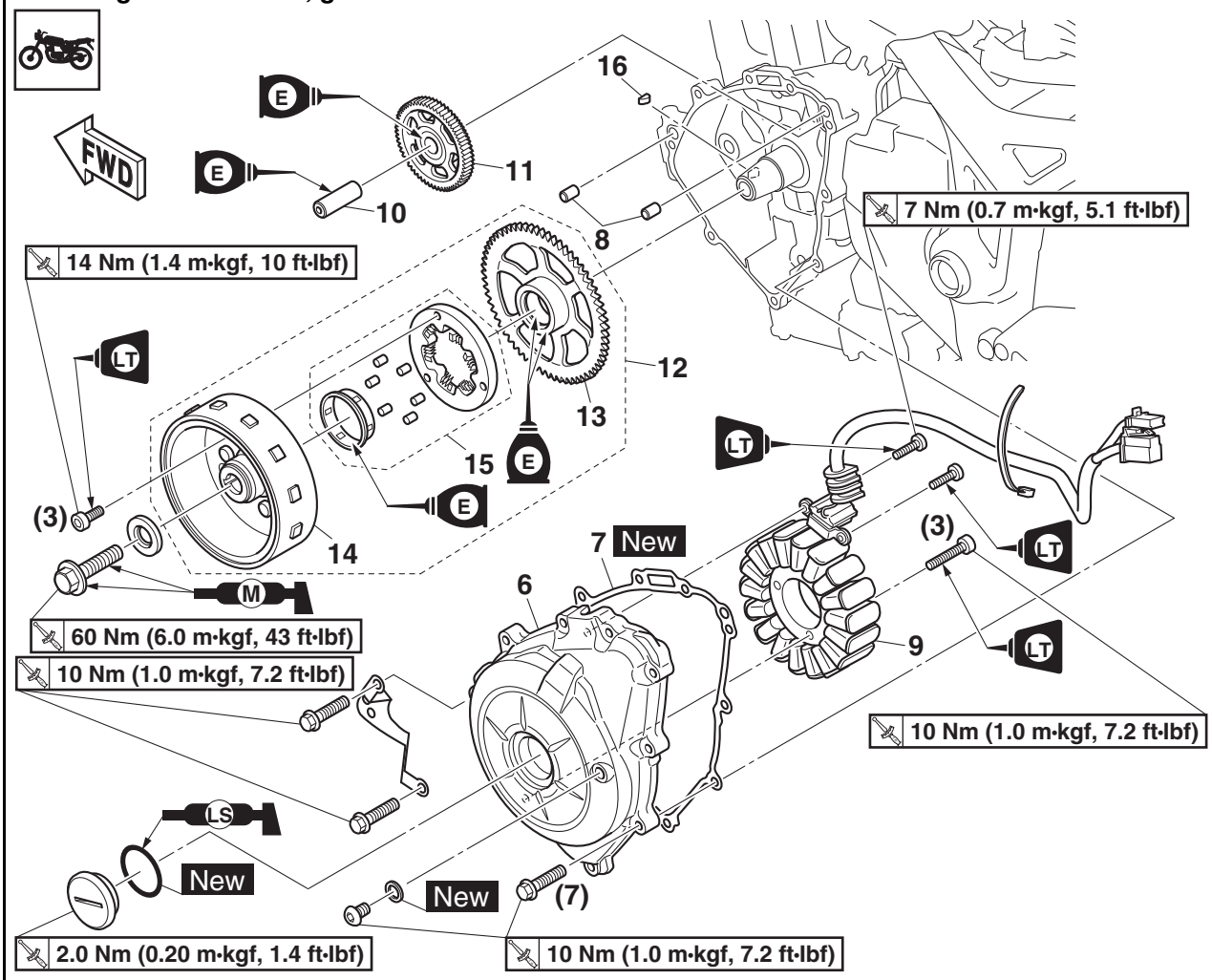

Order	Job/Parts to remove	Q'ty	Remarks
6	Generator cover	1	
7	Generator cover gasket	1	
8	Dowel pin	2	
9	Stator coil assembly (Stator coil/Crankshaft position sensor)	1	
10	Starter clutch idle gear shaft	1	
11	Starter clutch idle gear	1	
12	Generator rotor assembly	1	
13	Starter clutch gear	1	
14	Generator rotor	1	
15	Starter clutch	1	
16	Woodruff key	1	

EAS30867
REMOVING THE GENERATOR

1. Remove:
   - Generator rotor bolt “1”
   - Washer

TIP

While holding the generator rotor “2” with the rotor holding tool “3”, loosen the generator rotor bolt.

Rotor holding tool
90890-04166
YM-04166

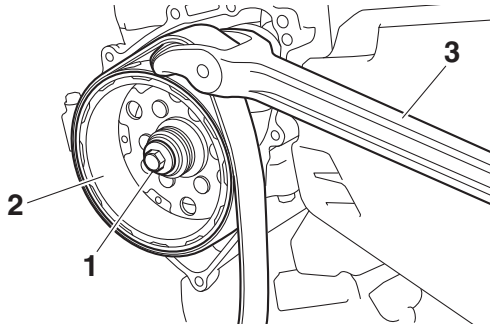

2. Remove:
   - Generator rotor assembly “1” (with the flywheel puller “2”)
   - Woodruff key

ECA13880

NOTICE

To protect the end of the crankshaft, place an appropriate sized socket between the flywheel puller set center bolt and the crankshaft.

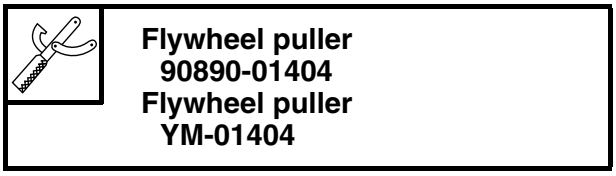

Flywheel puller
90890-01404
Flywheel puller
YM-01404

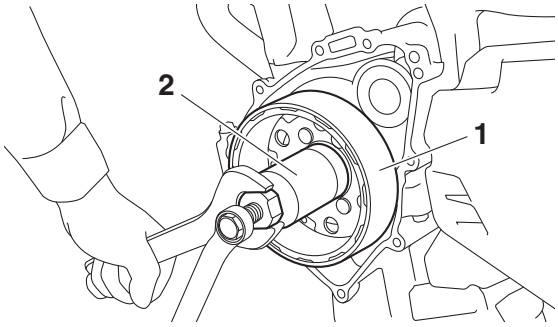

EAS30868
REMOVING THE STARTER CLUTCH

1. Remove:
   - Starter clutch bolts “1”
   - Generator rotor “2”
   - Starter clutch “3”

TIP

- While holding the generator rotor with the rotor holding tool “4”, loosen the starter clutch bolts.
- When removing the starter clutch from the generator rotor, make sure that the rollers “5” and starter clutch inner race “6” in the starter clutch remain in place.

Rotor holding tool
90890-04166
YM-04166

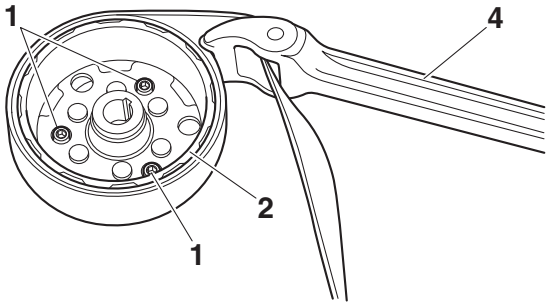

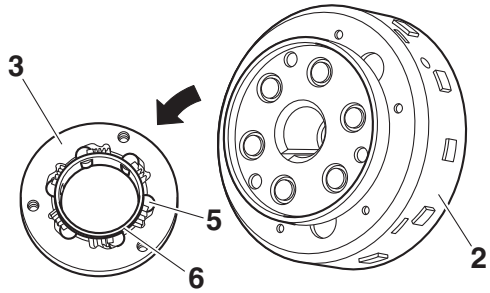

EAS30869
CHECKING THE STARTER CLUTCH

1. Check:
   - Starter clutch inner race “1”
   - Starter clutch rollers “2”
   - Starter clutch outer race “3”
     Damage/wear → Replace.

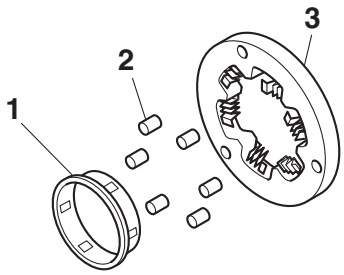

2. Check:
   - Starter clutch idle gear

- Starter clutch gear
  Burrs/chips/roughness/wear → Replace the defective part(s).

3. Check:
   - Starter clutch gear contact surfaces
     Damage/pitting/wear → Replace the starter clutch gear.
4. Check:
   - Starter clutch operation

▼▼▼▼▼▼▼▼▼▼▼▼▼▼▼▼▼▼▼▼▼▼▼▼▼▼▼▼▼▼▼▼▼▼

a. Install the starter clutch and starter clutch gear “1” onto the generator rotor “2” and hold the generator rotor. Refer to “INSTALLING THE STARTER CLUTCH” on page 5-44.
b. When turning the starter clutch gear clockwise “A”, the starter clutch and the starter clutch gear should engage, otherwise the starter clutch is faulty and must be replaced.
c. When turning the starter clutch gear counterclockwise “B”, it should turn freely, otherwise the starter clutch is faulty and must be replaced.

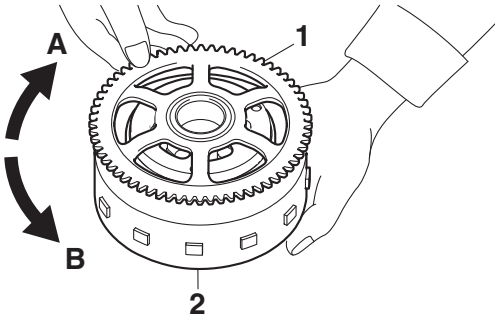

▲▲▲▲▲▲▲▲▲▲▲▲▲▲▲▲▲▲▲▲▲▲▲▲▲▲▲▲▲▲▲▲▲▲

EAS30871

INSTALLING THE STARTER CLUTCH

1. Assemble:
   - Starter clutch rollers “1”
   - Starter clutch inner race “2”
     (to the starter clutch outer race “3”)

TIP

When installing the starter clutch rollers and starter clutch inner race to the starter clutch outer race, make sure that the springs “a” are pointing in the direction shown in the illustration.

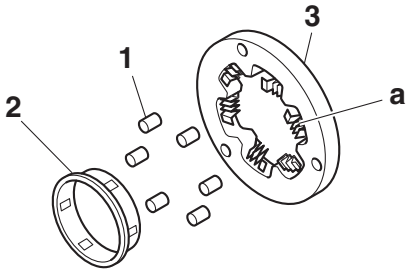

2. Install:
   - Starter clutch “1”
   - Starter clutch gear
     (to the generator rotor “2”)

Starter clutch bolt
14 Nm (1.4 m·kgf, 10 ft·lbf)
LOCTITE®

TIP

- Install the starter clutch so that the side of the clutch shown in the illustration is facing toward the generator rotor.
- While holding the generator rotor with the rotor holding tool “3”, tighten the starter clutch bolts “4”.

Rotor holding tool
90890-04166
YM-04166

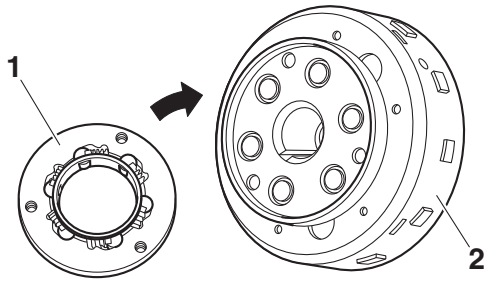

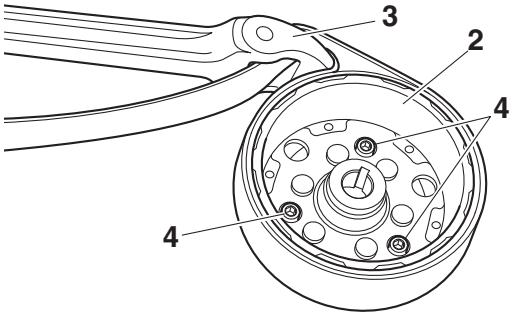

EAS30872
INSTALLING THE GENERATOR

1. Install:
   - Woodruff key
   - Generator rotor assembly
   - Washer “1”
   - Generator rotor bolt

TIP

- Clean the tapered portion of the crankshaft and the generator rotor hub.
- When installing the generator rotor assembly, make sure the Woodruff key is properly seated in the keyway of the crankshaft.
- Install the washer with its chamfered side “a” facing away from the generator rotor.
- Lubricate the generator rotor bolt threads and washer mating surfaces with molybdenum disulfide grease.

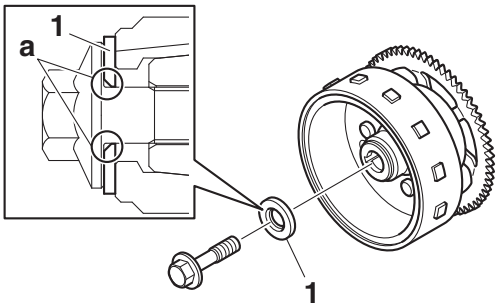

2. Tighten:
   - Generator rotor bolt “1”

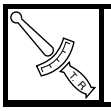

Generator rotor bolt
60 Nm (6.0 m·kgf, 43 ft·lbf)

TIP

While holding the generator rotor “2” with the rotor holding tool “3”, tighten the generator rotor bolt.

Rotor holding tool
90890-04166
YM-04166

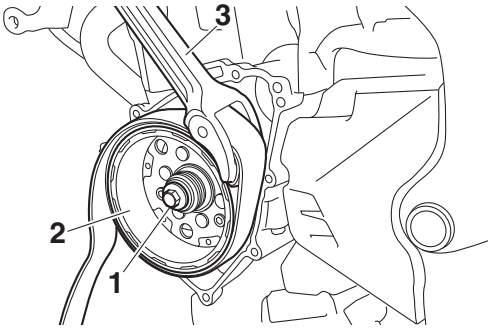

3. Apply:
   - Sealant
     (onto the stator coil lead grommet)

Yamaha bond No. 1215
90890-85505
(Three bond No.1215®)

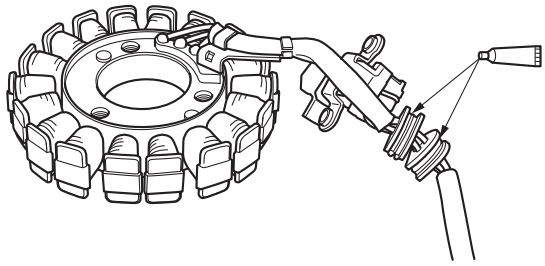

4. Install:
   - Generator cover gasket New
   - Generator cover

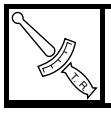

Generator cover bolt
10 Nm (1.0 m·kgf, 7.2 ft·lbf)

TIP

Tighten the generator cover bolts in stages and in a crisscross pattern.

5. Connect:
   - Stator coil coupler
   - Crankshaft position sensor coupler

TIP

To route the stator coil lead, refer to “CABLE ROUTING” on page 2-43.

EAS20052

ELECTRIC STARTER

Removing the starter motor

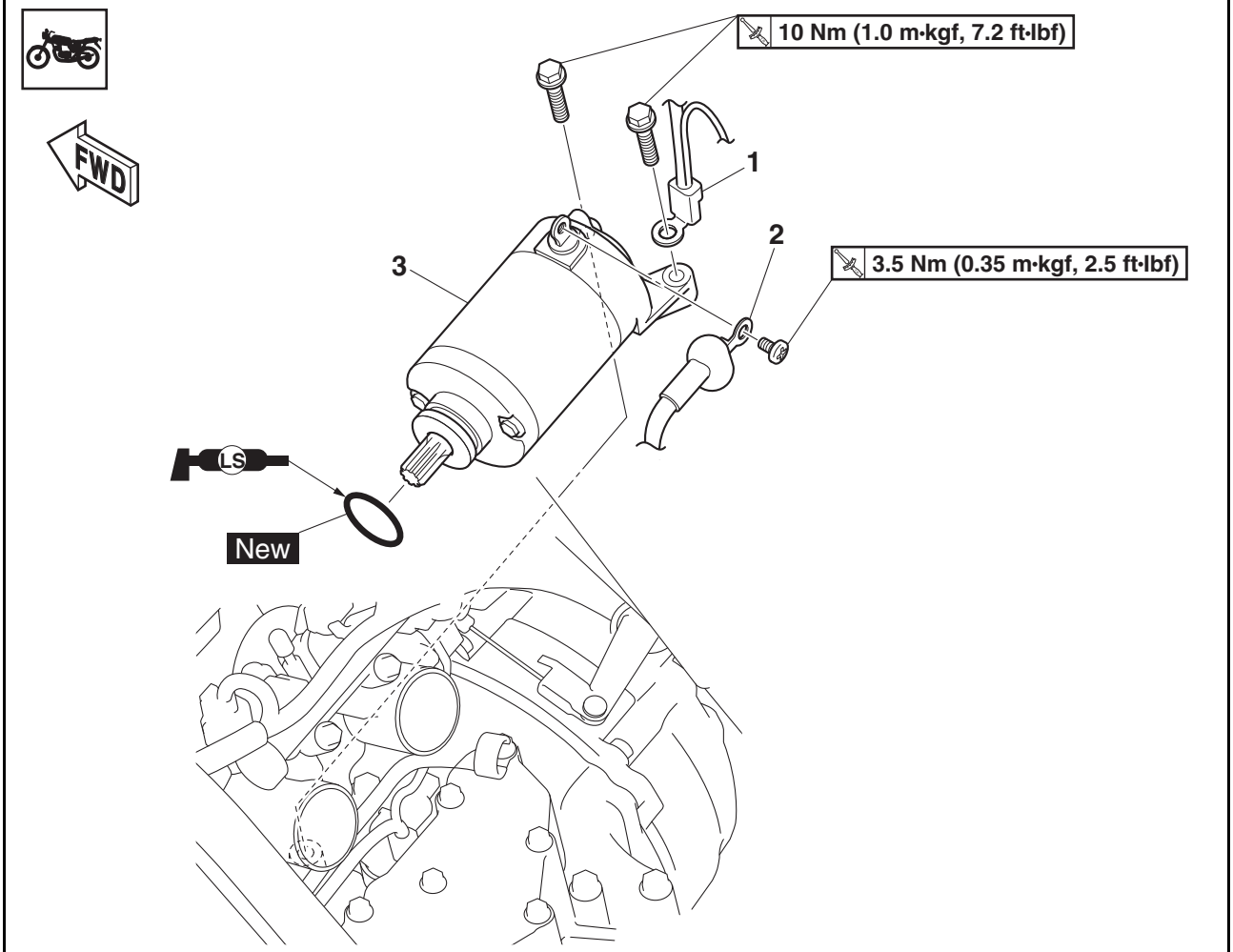

Order	Job/Parts to remove	Q'ty	Remarks
	Rider seat		Refer to "GENERAL CHASSIS (1)" on page 4-1.
	Side panel assemblies		Refer to "GENERAL CHASSIS (2)" on page 4-3.
	Fuel tank cover assembly		Refer to "GENERAL CHASSIS (3)" on page 4-8.
	Fuel tank		Refer to "FUEL TANK" on page 7-1.
	Air filter case		Refer to "GENERAL CHASSIS (5)" on page 4-15.
1	Engine ground lead	1	Disconnect.
2	Starter motor lead	1	Disconnect.
3	Starter motor	1	

Disassembling the starter motor

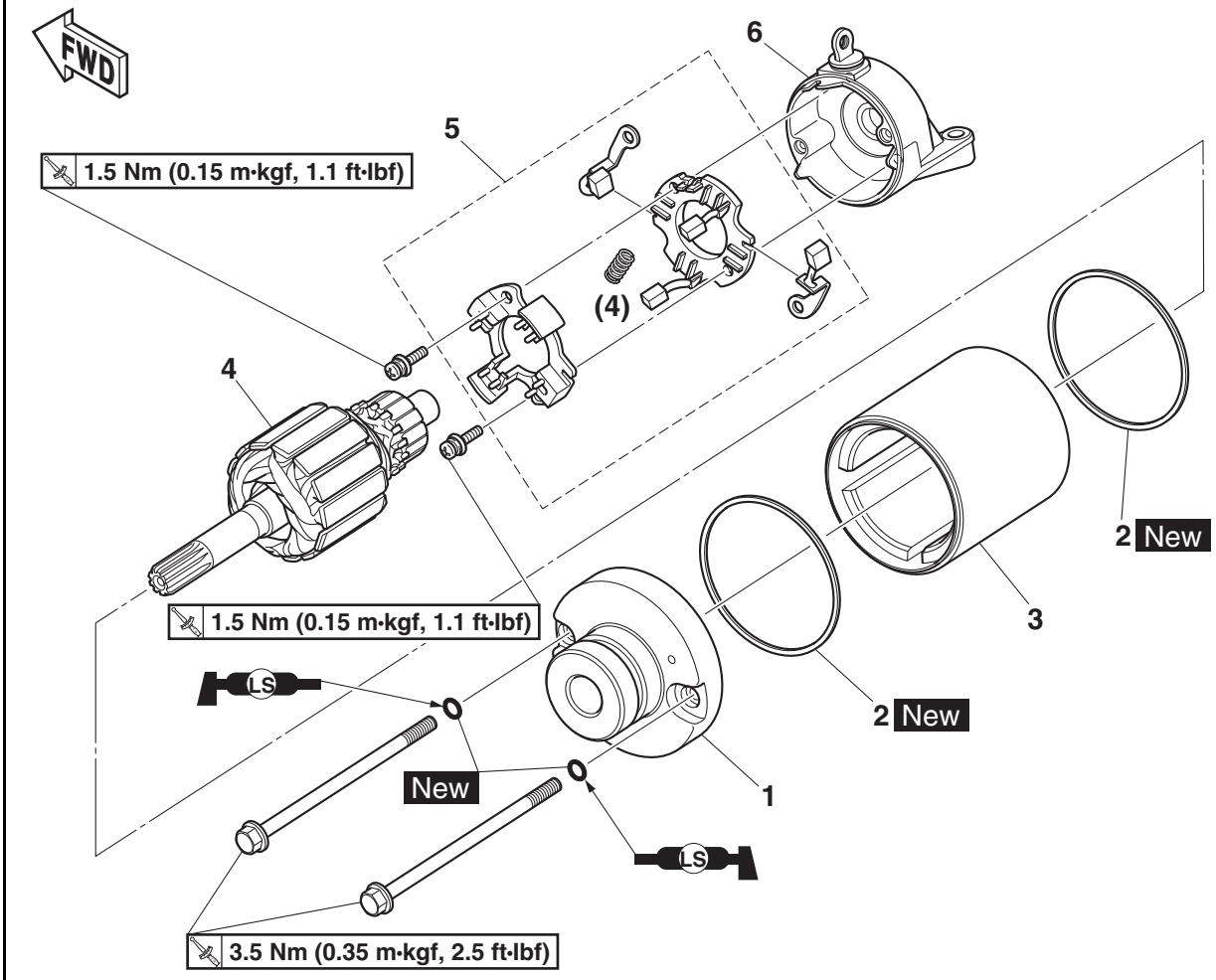

Order	Job/Parts to remove	Q'ty	Remarks
1	Starter motor front cover	1	
2	Gasket	2	
3	Starter motor yoke	1	
4	Armature assembly	1	
5	Brush holder set	1	
6	Starter motor rear cover	1	

EAS30325

CHECKING THE STARTER MOTOR

1. Check:
   - Commutator
     Dirt → Clean with 600 grit sandpaper.
2. Measure:
   - Diameter “a”
     Out of specification → Replace the starter motor

Diameter
24.5 mm (0.96 in)
Limit
23.5 mm (0.93 in)

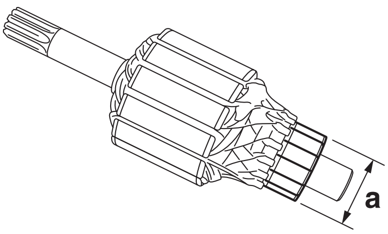

3. Measure:
   - Mica undercut “a”
     Out of specification → Scrape the mica to the proper measurement with a hacksaw blade that has been grounded to fit the commutator.

Mica undercut (depth)
1.50 mm (0.06 in)

TIP

The mica of the commutator must be undercut to ensure proper operation of the commutator.

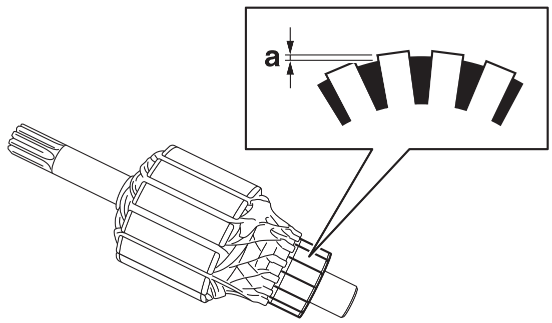

4. Measure:
   - Armature assembly resistances (commutator and insulation)
     Out of specification → Replace the starter motor.

a. Measure the armature assembly resistances with the digital circuit tester.

Digital circuit tester
90890-03174
Model 88 Multimeter with tachometer
YU-A1927

Armature coil
Commutator resistance “1”
0.063–0.077 Ω
Insulation resistance “2”
No continuity (Above 1 MΩ at 20 °C (68 °F))

b. If any resistance is out of specification, replace the starter motor.

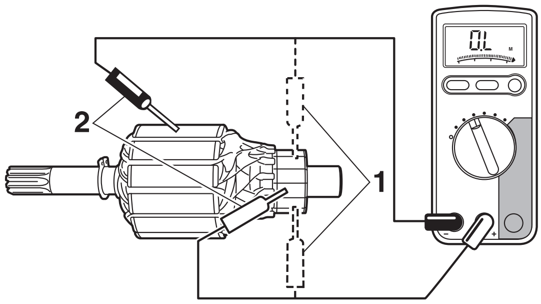

5. Measure:
   - Brush length “a”
     Out of specification → Replace the brush holder set.

Brush overall length
7.0 mm (0.28 in)
Limit
3.00 mm (0.12 in)

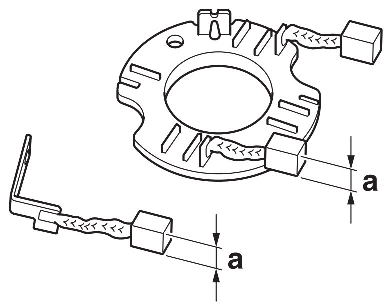

6. Measure:
   - Brush spring force
     Out of specification → Replace the spring.

Brush spring force
6.08–9.12 N (620–930 gf, 21.89–32.83 oz)

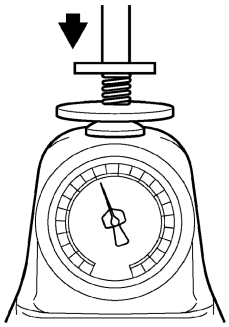

7. Check:
   - Gear teeth
     Damage/wear → Replace the starter motor.
8. Check:
   - Bearing
   - Oil seal
     Damage/wear → Replace the starter motor front cover.

EAS30326
ASSEMBLING THE STARTER MOTOR

1. Install:
   - Starter motor yoke “1”
   - Starter motor front cover “2”
   - Starter motor rear cover “3”

TIP

Align the match marks “a” on the starter motor yoke with the match marks “b” on the front cover and rear cover.

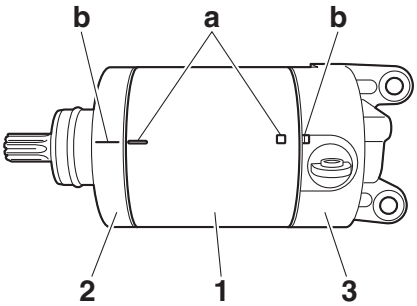

EAS30327
INSTALLING THE STARTER MOTOR

1. Install:
   - Starter motor “1”
   - Starter motor lead terminal “2”
   - Engine ground lead terminal “3”

Starter motor bolt
10 Nm (1.0 m·kgf, 7.2 ft·lbf)
Starter motor lead screw
3.5 Nm (0.35 m·kgf, 2.5 ft·lbf)

TIP

Install the engine ground lead terminal so that the crimped section “a” of the terminal that secures the ground leads is facing forward.

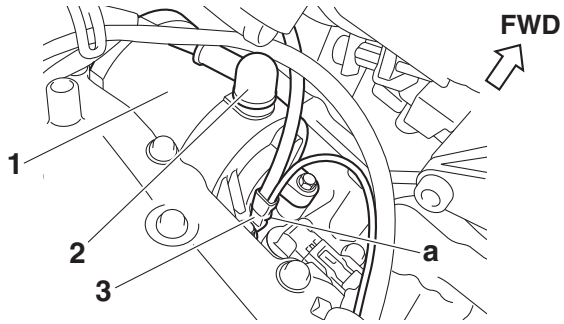

EAS20055

CLUTCH

Removing the clutch cover and pull lever shaft

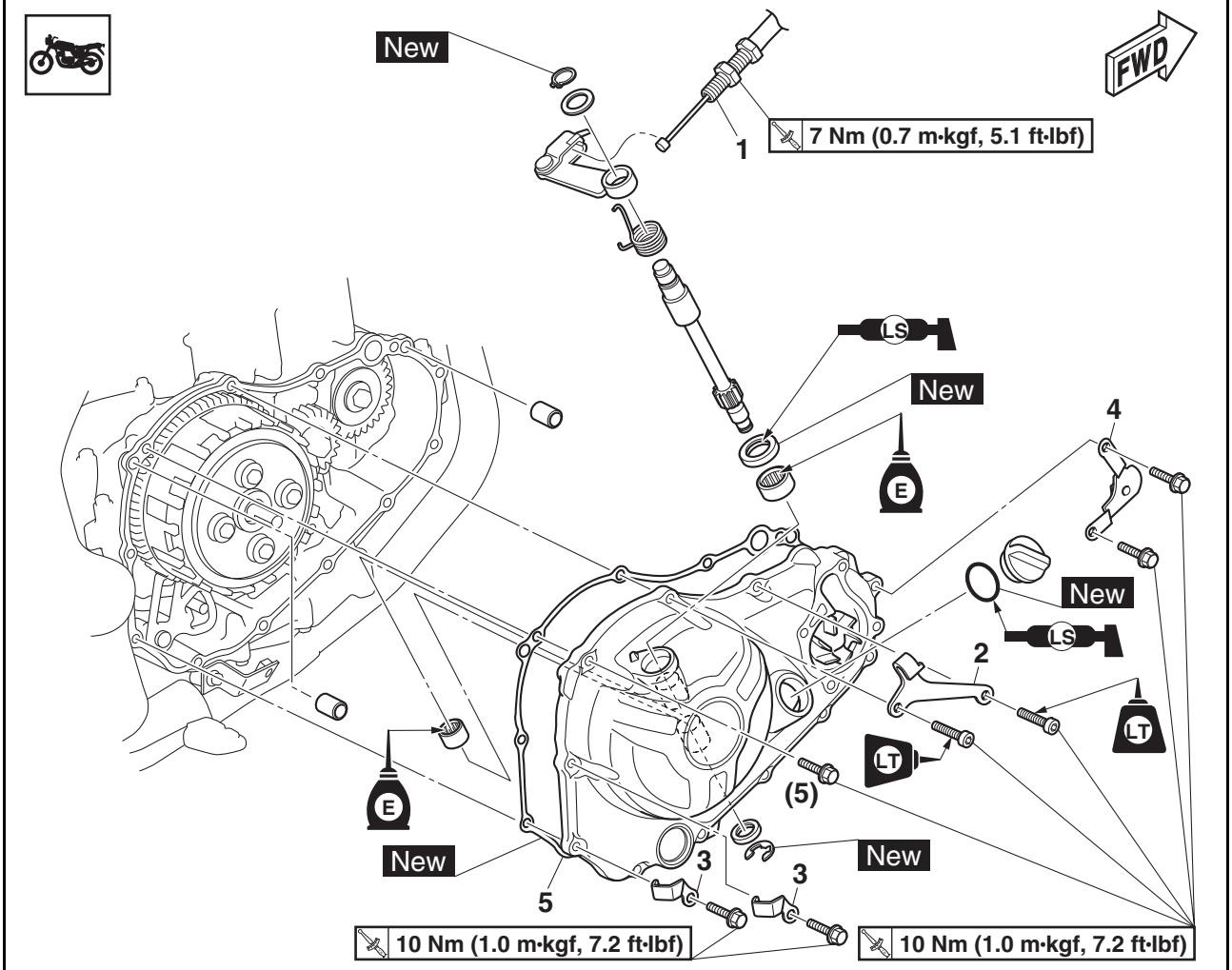

Order	Job/Parts to remove	Q'ty	Remarks
	Bottom cowling		Refer to "GENERAL CHASSIS (3)" on page 4-8.
	Engine oil		Drain. Refer to "CHANGING THE ENGINE OIL" on page 3-22.
	Coolant		Drain. Refer to "CHANGING THE COOLANT" on page 3-24.
	Water pump housing		Refer to "WATER PUMP" on page 6-7.
1	Clutch cable	1	Disconnect.
2	Clutch cable holder	1	
3	Holder (O_2 sensor lead)	2	
4	Bottom cowling bracket (right)	1	
5	Clutch cover	1	

Removing the clutch cover and pull lever shaft

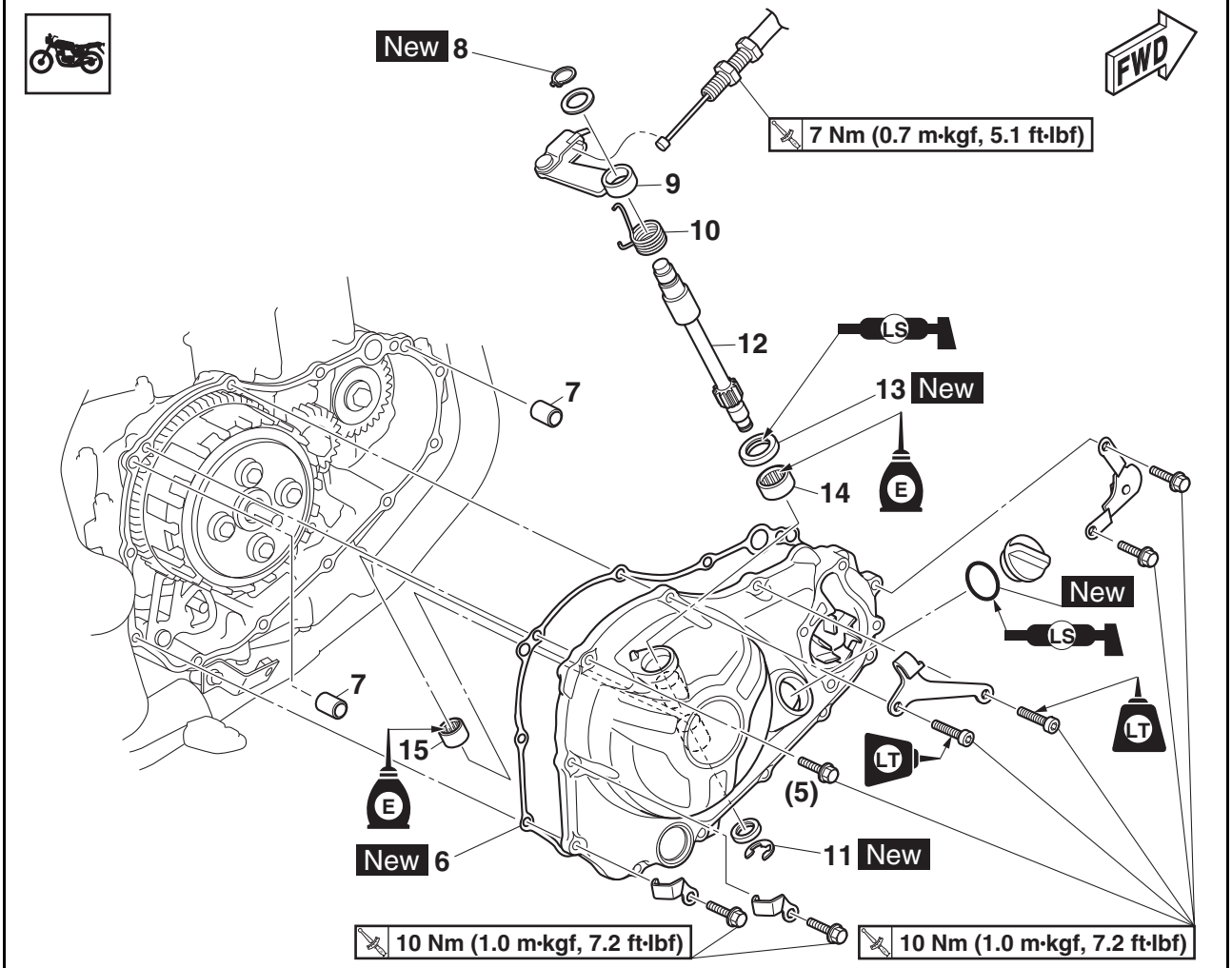

Order	Job/Parts to remove	Q'ty	Remarks
6	Clutch cover gasket	1	
7	Dowel pin	2	
8	Circlip	1	
9	Pull lever	1	
10	Pull lever spring	1	
11	Circlip	1	
12	Pull lever shaft	1	
13	Oil seal	1	
14	Bearing	1	
15	Bearing	1	

Removing the clutch

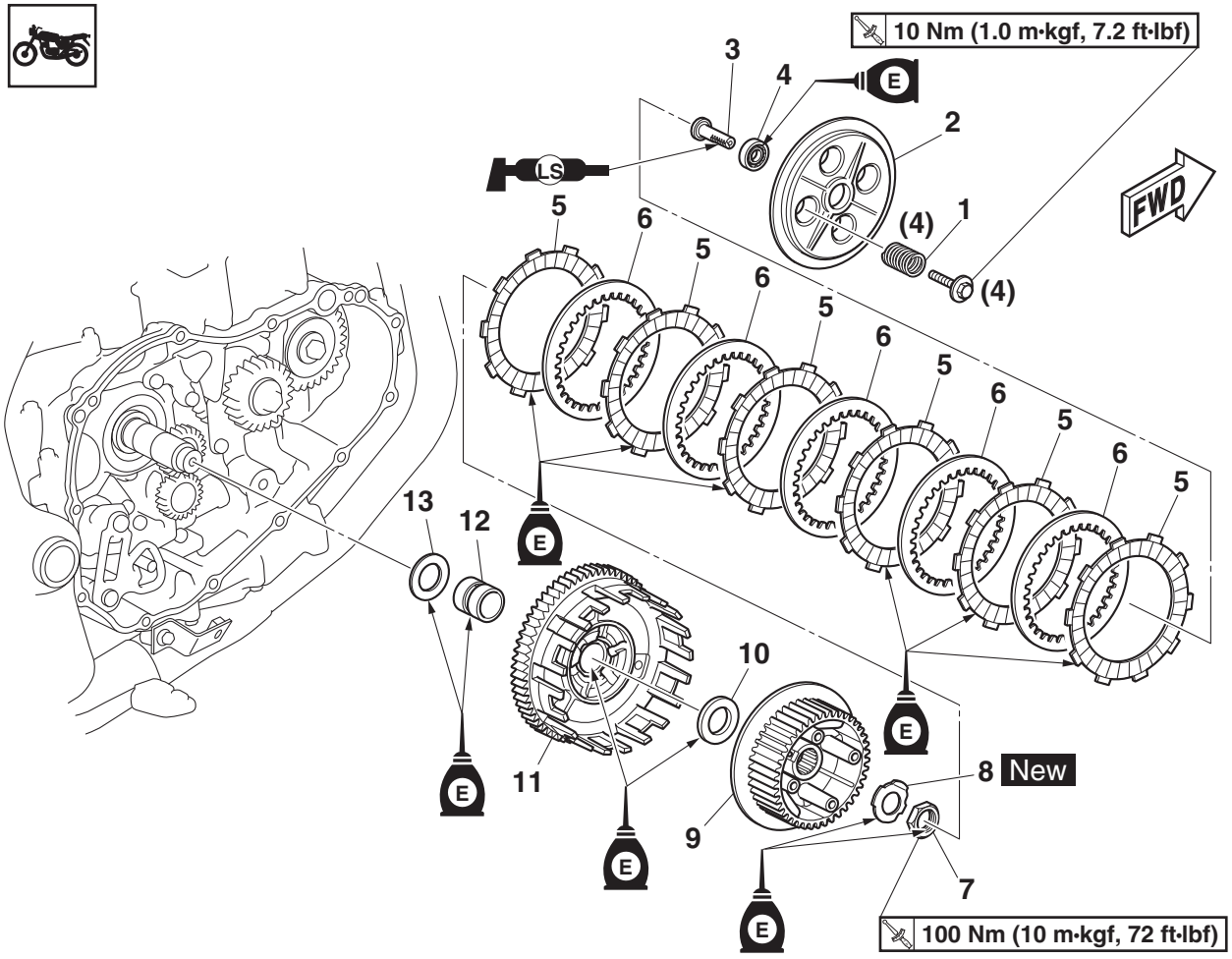

Order	Job/Parts to remove	Q'ty	Remarks
1	Compression spring	4	
2	Pressure plate	1	
3	Pull rod	1	
4	Bearing	1	
5	Friction plate	6	
6	Clutch plate	5	
7	Clutch boss nut	1	
8	Lock washer	1	
9	Clutch boss	1	
10	Thrust plate	1	
11	Clutch housing	1	
12	Spacer	1	
13	Washer	1	

EAS30346
REMOVING THE CLUTCH

1. Remove:
   - Clutch cover “1”
   - Clutch cover gasket

TIP

Loosen each bolt 1/4 of a turn at a time, in stages and in a crisscross pattern. After all of the bolts are fully loosened, remove them.

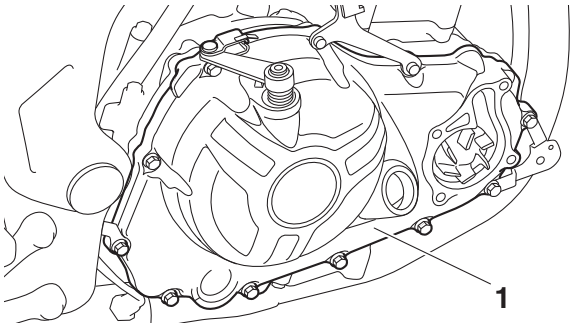

2. Remove:
   - Compression spring bolts “1”
   - Compression springs “2”
   - Pressure plate “3”
   - Pull rod “4”

TIP

Loosen the compression spring bolts in stages and in a crisscross pattern.

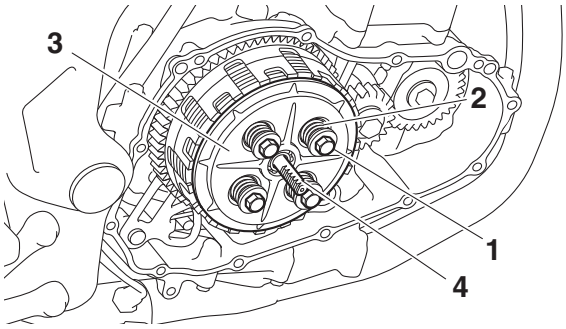

3. Remove:
   - Friction plates
   - Clutch plates
4. Straighten the lock washer tab “a”.

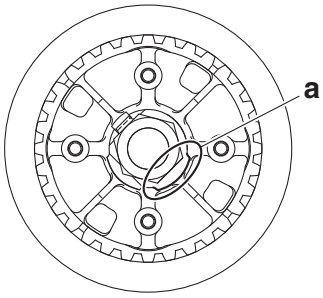

5. Loosen:
   - Clutch boss nut “1”

TIP

While holding the clutch boss “2” with the universal clutch holder “3”, loosen the clutch boss nut.

Universal clutch holder
90890-04086
Universal clutch holder
YM-91042

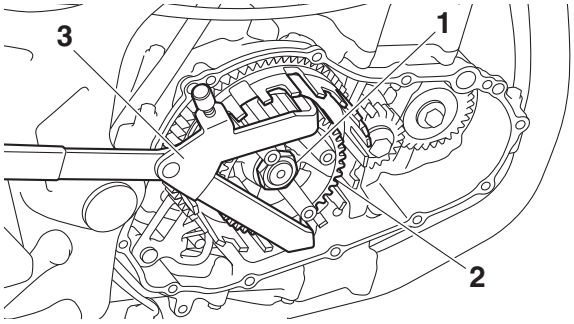

EAS30348
CHECKING THE FRICTION PLATES

The following procedure applies to all of the friction plates.

1. Check:
   - Friction plate
     Damage/wear → Replace the friction plates as a set.
2. Measure:
   - Friction plate thickness
     Out of specification → Replace the friction plates as a set.

TIP

Measure the friction plate at four places.

Friction plate thickness
2.92–3.08 mm
Wear limit
2.82 mm (0.111 in)

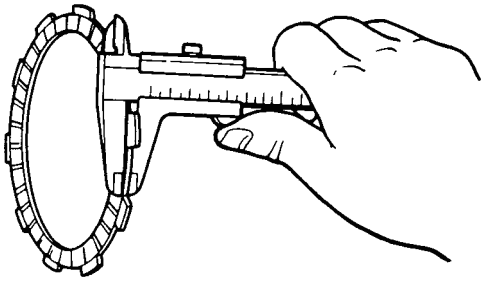

EAS30349
CHECKING THE CLUTCH PLATES

The following procedure applies to all of the clutch plates.

1. Check:
   - Clutch plate
     Damage → Replace the clutch plates as a set.
2. Measure:
   - Clutch plate warpage
     (with a surface plate and thickness gauge "1")
     Out of specification → Replace the clutch plates as a set.

Thickness gauge
90890-03180
Feeler gauge set
YU-26900-9

Warpage limit
0.10 mm (0.004 in)

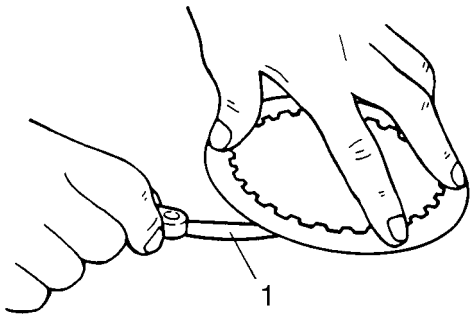

EAS30351
CHECKING THE CLUTCH SPRINGS

The following procedure applies to all of the clutch springs.

1. Check:
   - Clutch spring
     Damage → Replace the clutch springs as a set.
2. Measure:
   - Clutch spring free length "a"
     Out of specification → Replace the clutch springs as a set.

Clutch spring free length
47.81 mm (1.88 in)
Limit
45.42 mm (1.79 in)

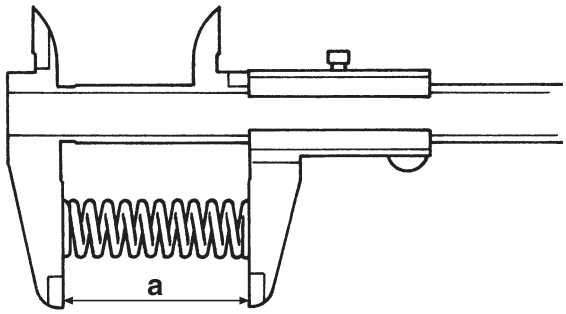

EAS30352
CHECKING THE CLUTCH HOUSING

1. Check:
   - Clutch housing dogs
     Damage/pitting/wear → Deburr the clutch housing dogs or replace the clutch housing.

TIP

Pitting on the clutch housing dogs will cause erratic clutch operation.

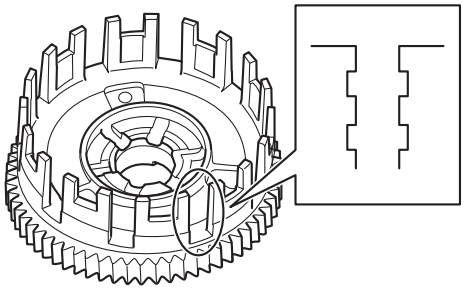

2. Check:
   - Oil pump drive gear "1"
     Cracks/damage/wear → Replace the clutch housing, oil pump idle gear and oil pump driven gear as a set.

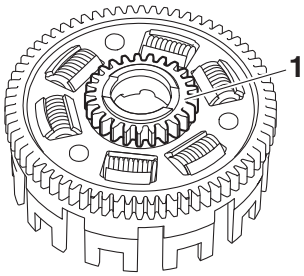

EAS30353
CHECKING THE CLUTCH BOSS

1. Check:
   - Clutch boss splines
     Damage/pitting/wear → Replace the clutch boss.

TIP

Pitting on the clutch boss splines will cause erratic clutch operation.

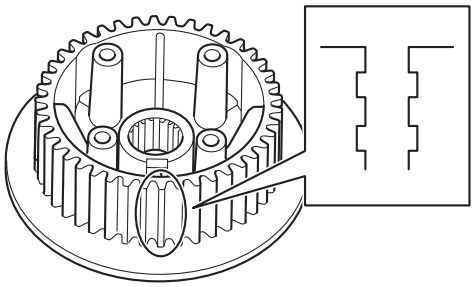

EAS30354

CHECKING THE PRESSURE PLATE

1. Check:
   - Pressure plate “1”
     Cracks/damage → Replace the pressure plate assembly.
   - Bearing “2”
     Damage/wear → Replace the pressure plate assembly.

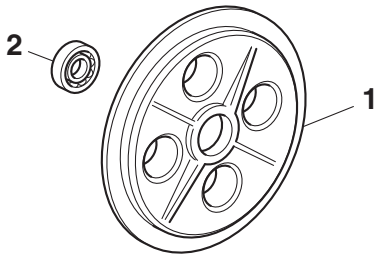

EAS30356

CHECKING THE PRIMARY DRIVE GEAR

1. Check:
   - Primary drive gear
     Damage/wear → Replace the crankshaft and clutch housing as a set.
     Excessive noise during operation → Replace the crankshaft and clutch housing as a set.

EAS30357

CHECKING THE PRIMARY DRIVEN GEAR

1. Check:
   - Primary driven gear “1”
     Damage/wear → Replace the clutch housing and crankshaft as a set.
     Excessive noise during operation → Replace the clutch housing and crankshaft as a set.

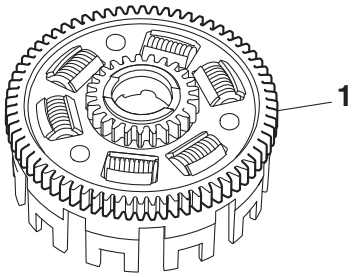

EAS30358

CHECKING THE PULL LEVER SHAFT AND PULL ROD

1. Check:
   - Pull lever shaft pinion gear teeth “1”
   - Pull rod teeth “2”
     Damage/wear → Replace the pull rod and pull lever shaft as a set.

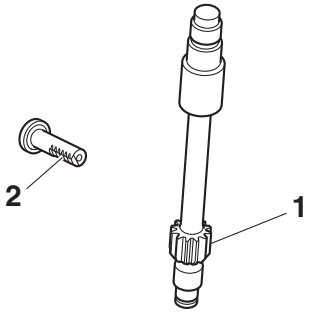

2. Check:
   - Pull rod bearings
     Damage/wear → Replace.

EAS30363

INSTALLING THE CLUTCH

1. Install:
   - Washer
   - Spacer
   - Clutch housing
   - Thrust plate
   - Clutch boss “1”
   - Lock washer New
   - Clutch boss nut “2”

	Clutch boss nut **100 Nm (10 m·kgf, 72 ft·lbf)**

TIP

- Install the thrust plate with round-edged corner facing out.
- Lubricate the lock washer and clutch boss nut threads with engine oil.
- While holding the clutch boss with the universal clutch holder “3”, tighten the clutch boss nut.

- Bend the lock washer tab “a” along a flat side of the nut.

Universal clutch holder
90890-04086
Universal clutch holder
YM-91042

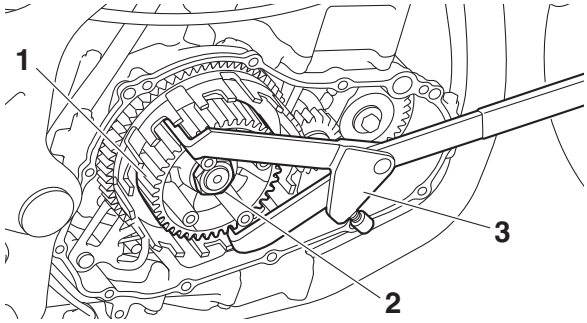

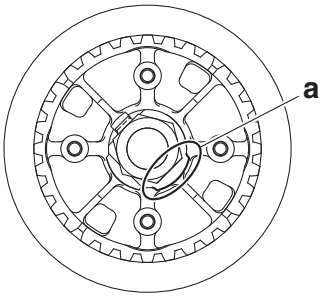

2. Install:
   - Friction plates
   - Clutch plates

TIP

- Fit the tabs on the friction plates into the large slots “a” in the clutch housing.
- Check that the outermost friction plate and clutch plate move smoothly.

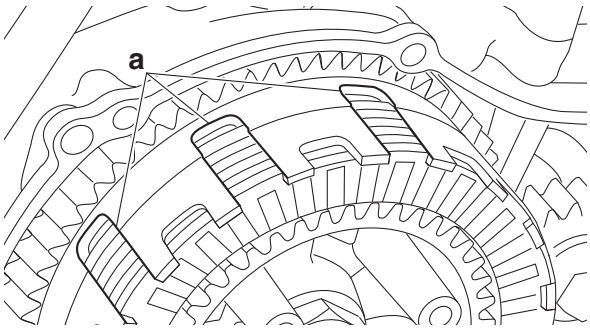

3. Install:
   - Bearing
     (to the pressure plate)
   - Pull rod “1”
   - Pressure plate “2”
   - Clutch springs “3”
   - Clutch spring bolts “4”

Clutch spring bolt
10 Nm (1.0 m·kgf, 7.2 ft·lbf)

TIP

- Apply lithium-soap-based grease onto the pull rod.
- Tighten the clutch spring bolts in stages and in a crisscross pattern.

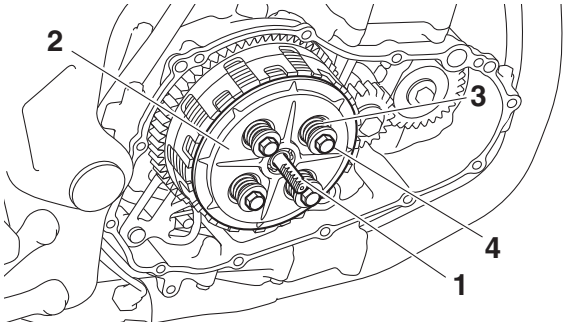

4. Install:
   - Bearings “1”
   - Oil seal “2” New
     (to the clutch cover)

TIP

- Lubricate the bearings with engine oil and lubricate the oil seal with lithium-soap-based grease.
- Install the bearings until they contact the surfaces “a” and install the oil seal until it contacts the surface “b” as shown in the illustration.

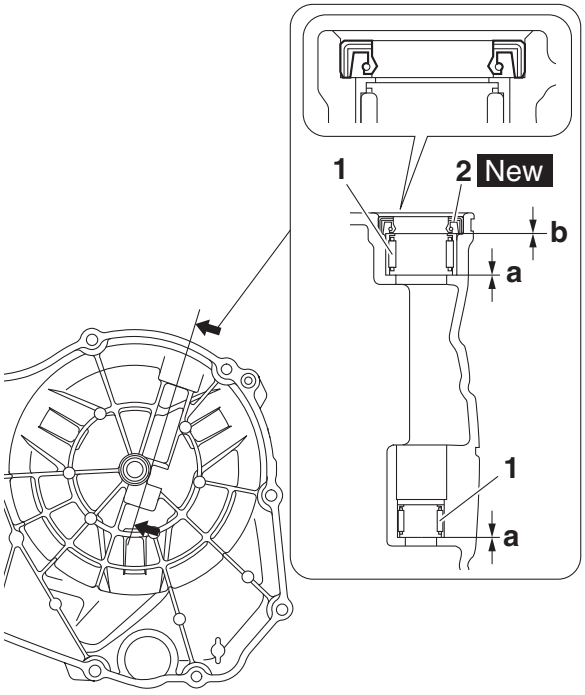

5. Install:
   - Dowel pins “1”
   - Clutch cover gasket “2” New
   - Clutch cover “3”
   - Clutch cable holder “4”
   - Holders (O_2 sensor lead)

Clutch cover bolt
10 Nm (1.0 m·kgf, 7.2 ft·lbf)
Clutch cable holder bolt
10 Nm (1.0 m·kgf, 7.2 ft·lbf)
LOCTITE®

TIP

- Face the serrations on the clutch pull rod “5” rearward and align the rod with the hole “a” in the clutch cover.
- Make sure that the pull rod teeth and pull lever shaft pinion gear are engaged.
- Apply locking agent (LOCTITE®) to the threads of only the clutch cable holder bolts “6” shown in the illustration.
- Tighten the bolts in stages and in a crisscross pattern.
- After installing the clutch cover, make sure that the alignment mark “b” on the clutch cover is aligned with the punch mark “c” on the pull lever “7”.

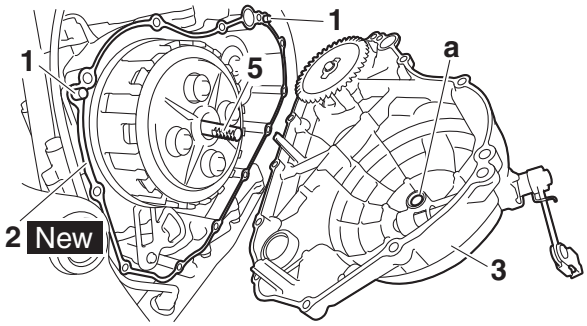

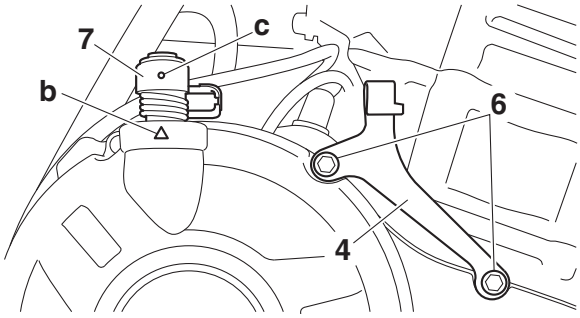

6. Connect:
   - Clutch cable “1”

TIP

- Install the clutch cable so that the clutch cable length “a” is 52.6–64.1 mm (2.07–2.52 in) as shown in the illustration.
- After installing the clutch cable, bend the projection “b” on the pull lever as shown in the illustration.

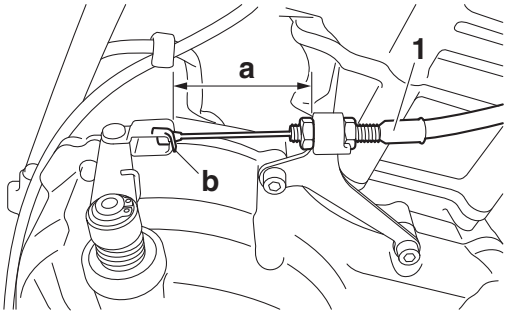

7. Adjust:
   - Clutch lever free play
     Refer to “ADJUSTING THE CLUTCH LEVER FREE PLAY” on page 3-12.

Clutch lever free play
10.0–15.0 mm (0.39–0.59 in)

EAS20057

SHIFT SHAFT

Removing the shift pedal

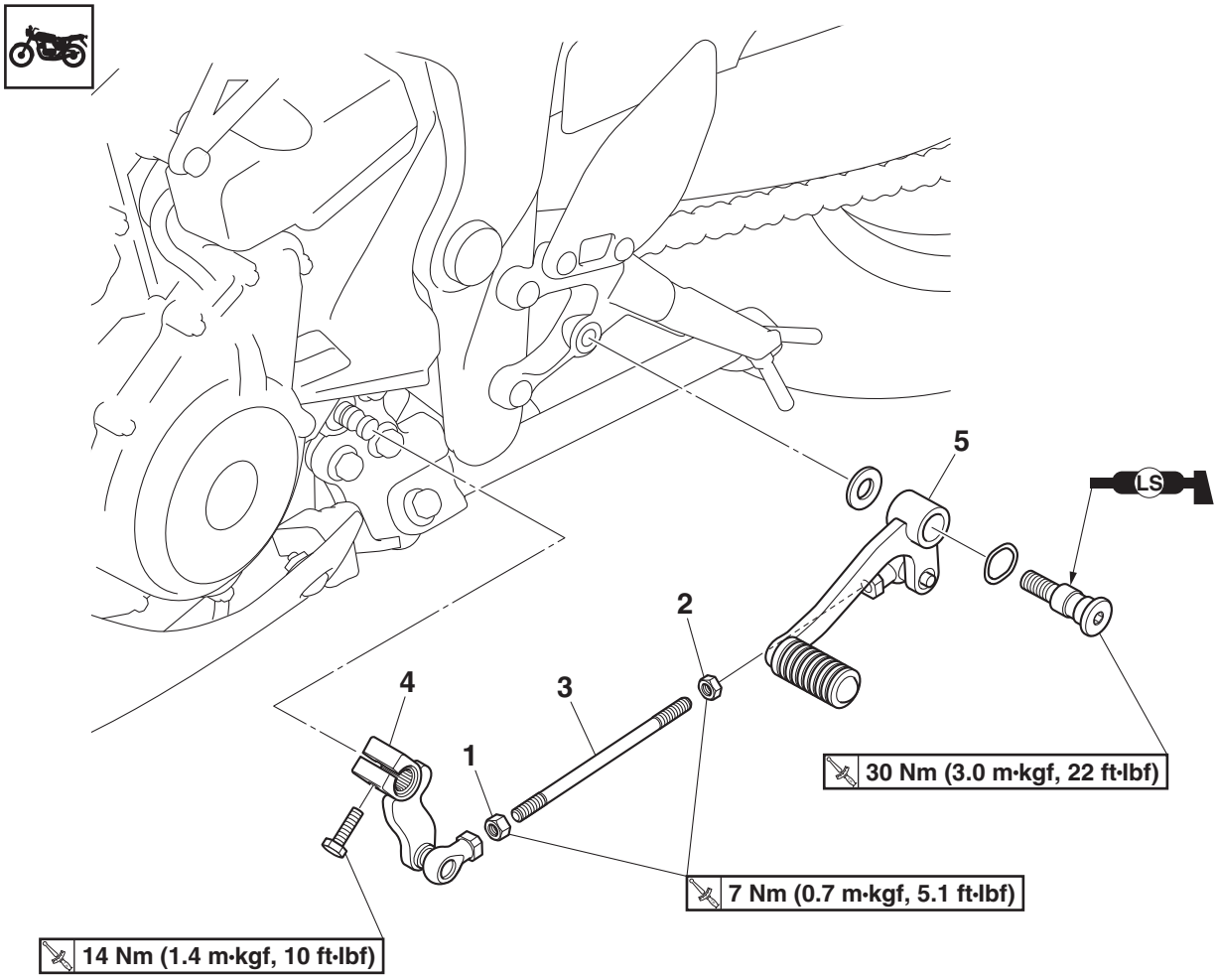

Order	Job/Parts to remove	Q'ty	Remarks
1	Shift rod locknut (shift arm side)	1	
2	Shift rod locknut (shift pedal side)	1	Left-hand thread.
3	Shift rod	1	
4	Shift arm	1	
5	Shift pedal	1	

Removing the shift shaft and stopper lever

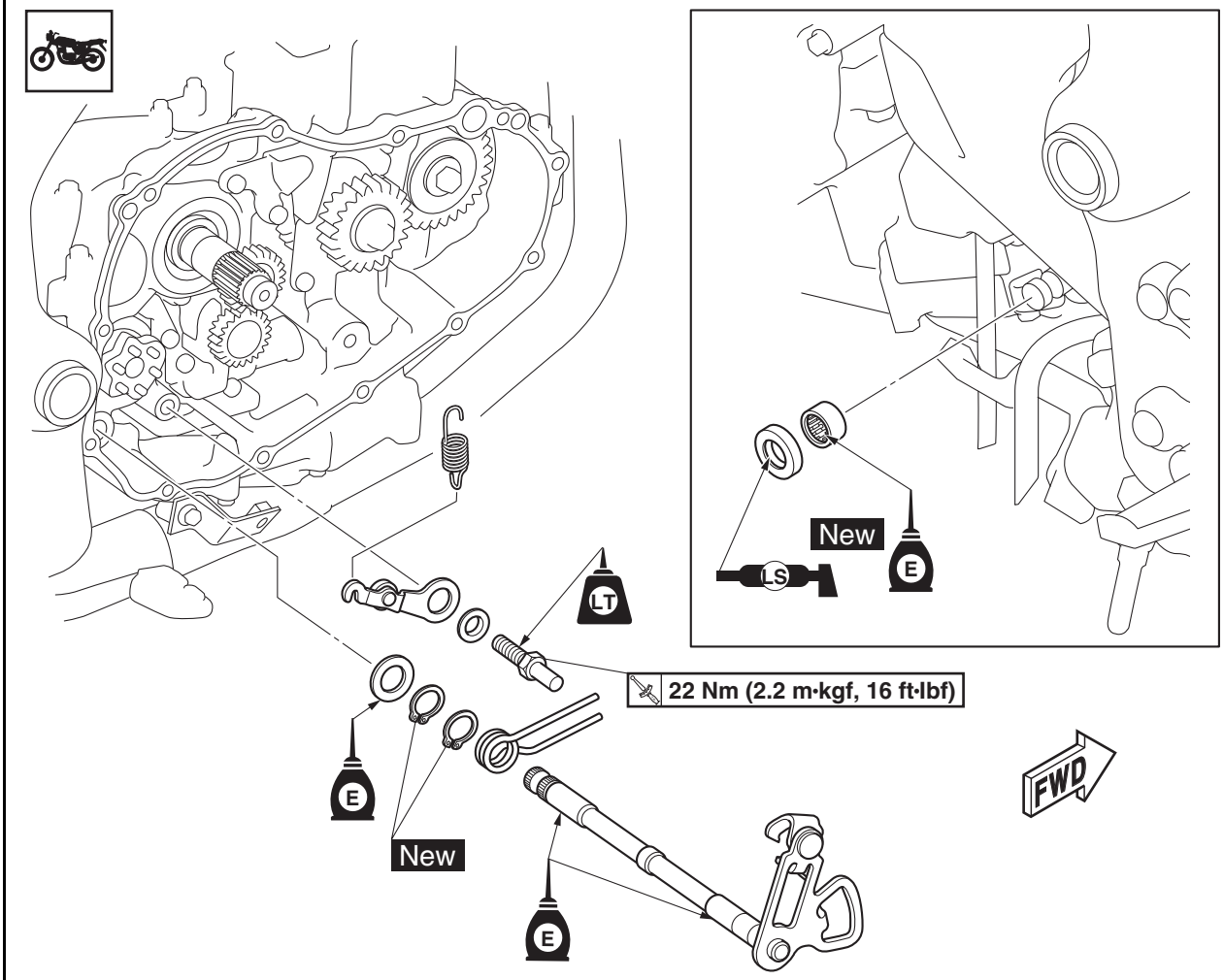

Order	Job/Parts to remove	Q'ty	Remarks
	Bottom cowling		Refer to "GENERAL CHASSIS (3)" on page 4-8.
	Engine oil		Drain. Refer to "CHANGING THE ENGINE OIL" on page 3-22.
	Coolant		Drain. Refer to "CHANGING THE COOLANT" on page 3-24.
	Water pump housing		Refer to "WATER PUMP" on page 6-7.
	Clutch housing		Refer to "CLUTCH" on page 5-50.
	Shift arm		Refer to "SHIFT SHAFT" on page 5-58.

Removing the shift shaft and stopper lever

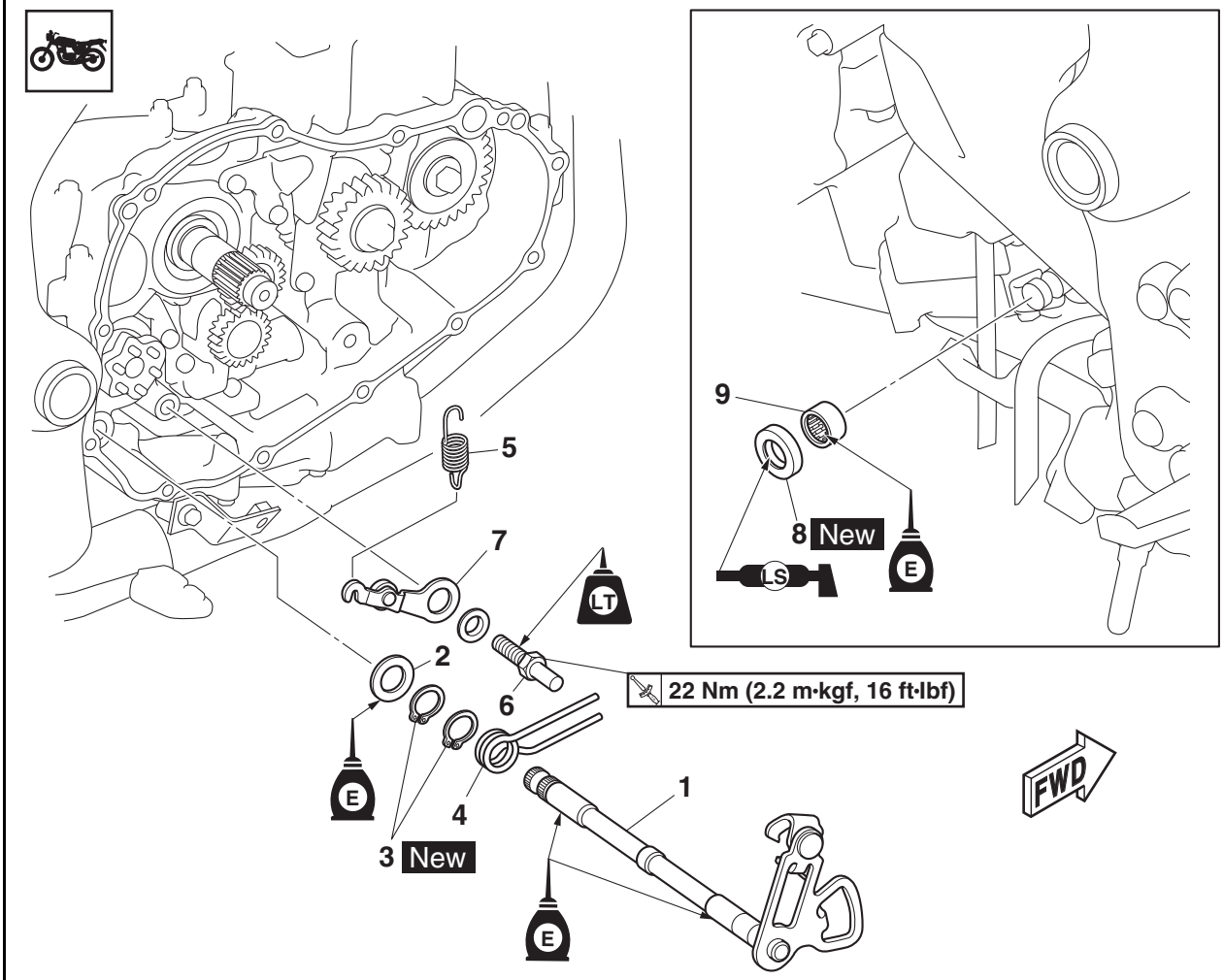

Order	Job/Parts to remove	Q'ty	Remarks
1	Shift shaft	1	
2	Washer	1	
3	Circlip	2	
4	Shift shaft spring	1	
5	Stopper lever spring	1	
6	Shift shaft spring stopper	1	
7	Stopper lever	1	
8	Oil seal	1	
9	Bearing	1	

EAS30377
CHECKING THE SHIFT SHAFT
1. Check:
   - Shift shaft “1”
     Bends/damage/wear → Replace.
   - Shift shaft spring “2”
     Damage/wear → Replace.

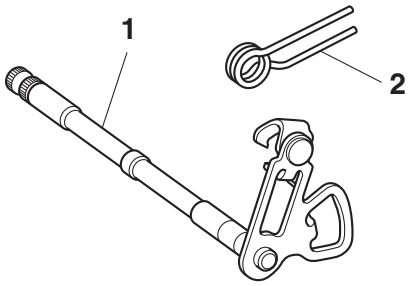

EAS30378
CHECKING THE STOPPER LEVER
1. Check:
   - Stopper lever “1”
     Bends/damage → Replace.
     Roller turns roughly → Replace the stopper lever.

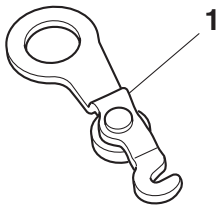

EAS30381
INSTALLING THE SHIFT SHAFT
1. Install:
   - Bearing “1”
   - Oil seal “2” New

Install depth “a”
6.5–6.8 mm (0.26–0.27 in)
Install depth “b”
0.6–1.1 mm (0.02–0.04 in)

TIP
- Apply engine oil onto the bearing.
- If the bearing has a manufacturer’s mark, press the side of the bearing with the mark.
- Lubricate the oil seal lips with lithium-soap-based grease. When pressing the oil seal, make sure that it is facing in the direction shown in the illustration.

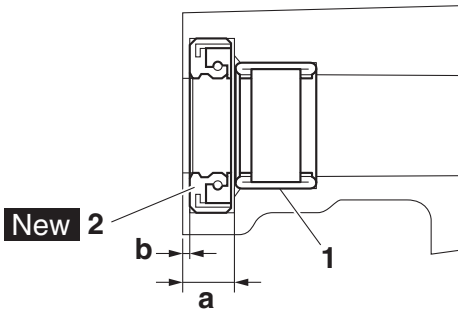

2. Install:
   - Stopper lever
   - Collar
   - Shift shaft spring stopper
   - Stopper lever spring
   - Shift shaft assembly

Shift shaft spring stopper
22 Nm (2.2 m·kgf, 16 ft·lbf)
LOCTITE®

TIP
- Hook the end of the shift shaft spring “1” onto the shift shaft spring stopper “2”.
- Hook the ends of the stopper lever spring “3” onto the stopper lever “4” and the projection “a” on the lower crankcase. Make sure that the base “b” of the hooked end of the stopper lever spring is positioned as shown in the illustration.
- Mesh the stopper lever with the shift drum segment assembly.

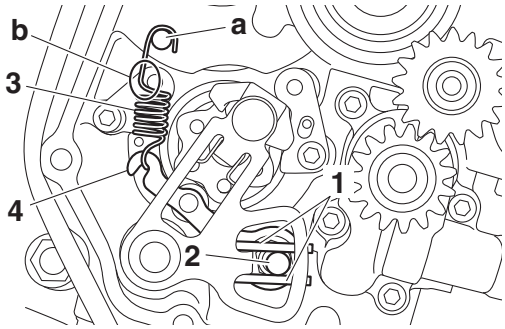

EAS31370
INSTALLING THE SHIFT ROD
1. Install:
   - Shift arm “1”
   - Shift rod
   - Shift rod locknuts

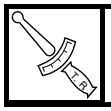

Shift arm pinch bolt
14 Nm (1.4 m·kgf, 10 ft·lbf)

TIP

Align the match mark “a” of the shift shaft with the punch mark “b” of the shift arm.

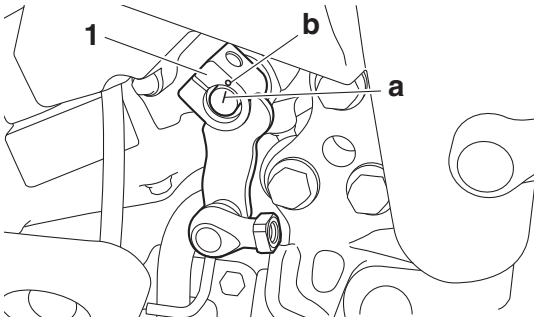

2. Measure:
   - Installed shift rod length “a”
     Incorrect → Adjust.

	Installed length “a” **141.6–145.6 mm (5.57–5.73 in)**

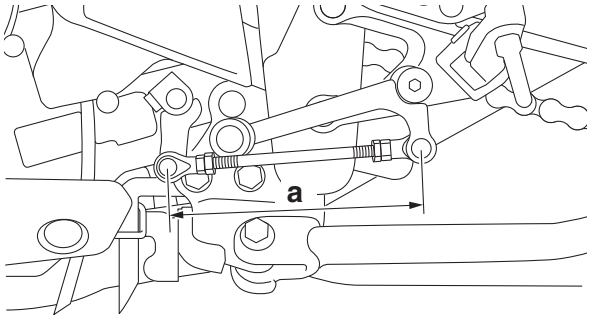

3. Adjust:
   - Installed shift rod length

▼▼▼▼▼▼▼▼▼▼▼▼▼▼▼▼▼▼▼▼▼▼▼▼▼▼▼▼▼▼▼▼▼▼

a. Loosen both locknuts “1”.

TIP

The shift rod locknut (shift pedal side) has left-hand thread.

b. Turn the shift rod “2” in direction “a” or “b” to obtain the correct shift pedal position.

Direction “a” **Installed shift rod length increases.** **Direction “b”** **Installed shift rod length decreases.**

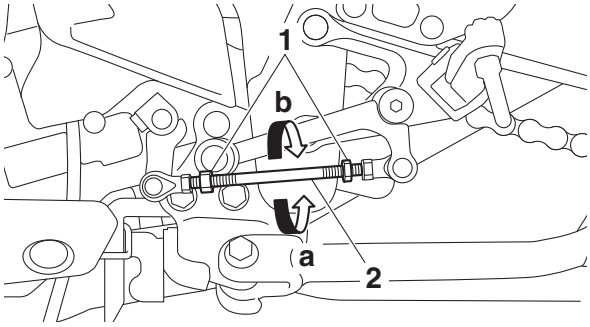

c. Tighten both locknuts.

TIP

The shift rod locknut (shift pedal side) has left-hand thread.

	Shift rod locknut (shift arm side) **7 Nm (0.7 m·kgf, 5.1 ft·lbf)** **Shift rod locknut (shift pedal side)** **7 Nm (0.7 m·kgf, 5.1 ft·lbf)** **Left-hand thread**

▲▲▲▲▲▲▲▲▲▲▲▲▲▲▲▲▲▲▲▲▲▲▲▲▲▲▲▲▲▲▲▲▲▲

EAS20054

OIL PUMP

Removing the oil pump

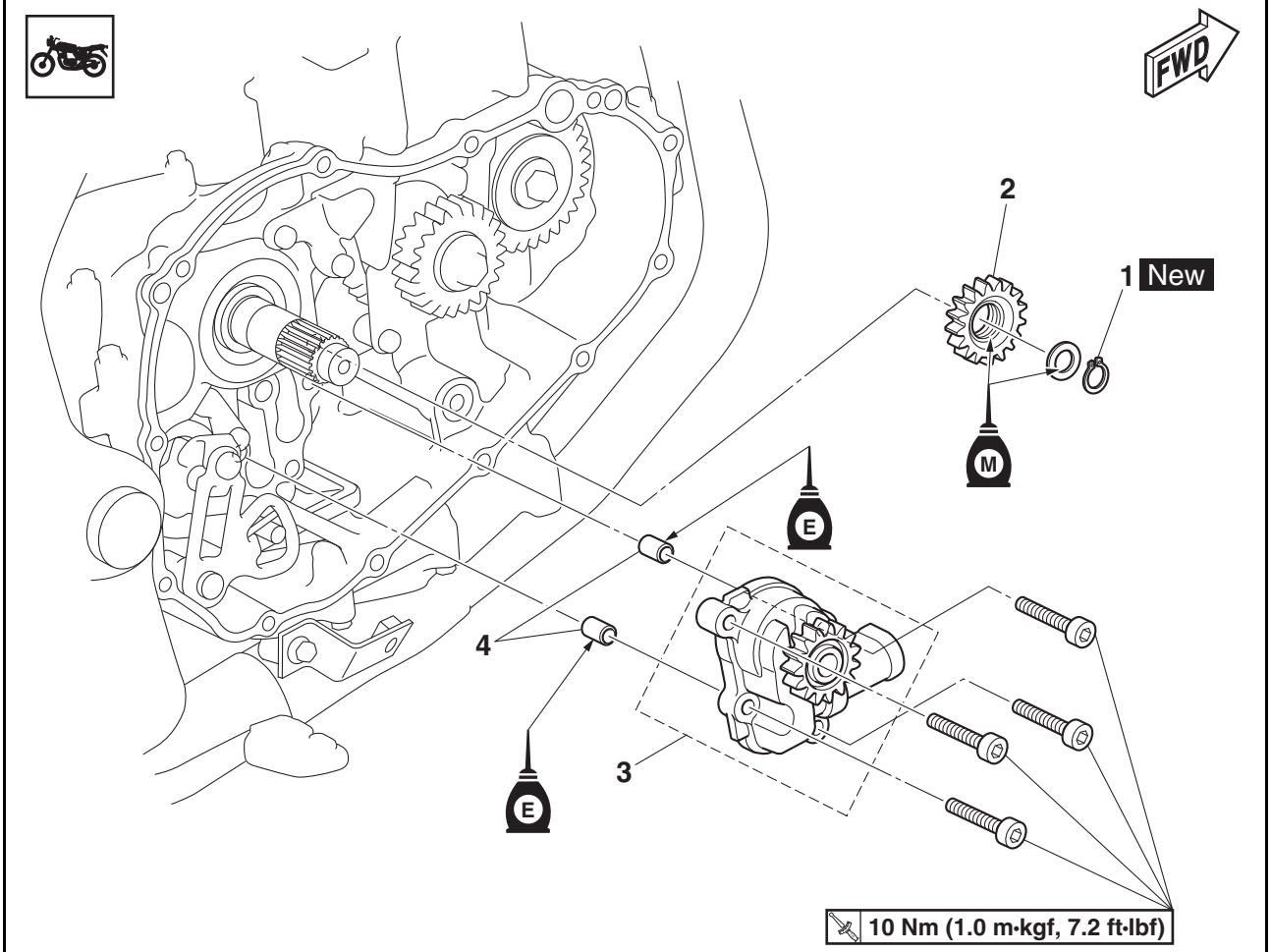

Order	Job/Parts to remove	Q'ty	Remarks
	Bottom cowling		Refer to "GENERAL CHASSIS (3)" on page 4-8.
	Engine oil		Drain. Refer to "CHANGING THE ENGINE OIL" on page 3-22.
	Coolant		Drain. Refer to "CHANGING THE COOLANT" on page 3-24.
	Water pump housing		Refer to "WATER PUMP" on page 6-7.
	Clutch housing		Refer to "CLUTCH" on page 5-50.
1	Circlip	1	
2	Oil pump idle gear	1	
3	Oil pump assembly	1	
4	Dowel pin	2	

Disassembling the oil pump

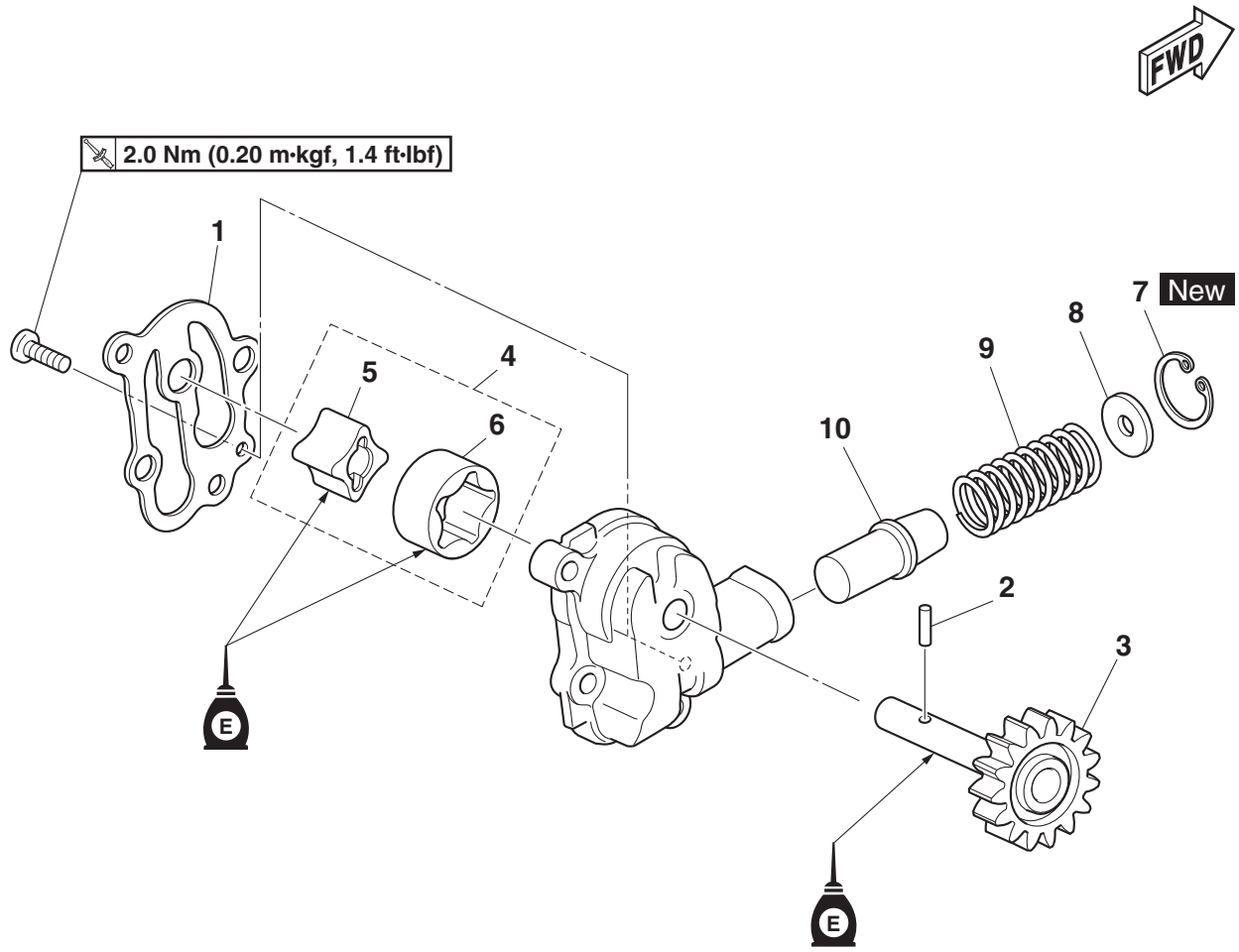

Order	Job/Parts to remove	Q'ty	Remarks
1	Oil pump cover	1	
2	Pin	1	
3	Oil pump driven gear	1	
4	Oil pump rotor assembly	1	
5	Oil pump inner rotor	1	
6	Oil pump outer rotor	1	
7	Circlip	1	Hold down the washer and do not scratch housing when removing the circlip.
8	Washer	1	
9	Spring	1	
10	Relief valve	1	

EAS31312
CHECKING THE OIL PUMP IDLE GEAR
1. Check:
   - Oil pump drive gear
     Damage/wear → Replace the oil pump idle gear, oil pump assembly and clutch housing as a set.

EAS30337
CHECKING THE OIL PUMP
1. Check:
   - Oil pump driven gear “1”
   - Oil pump housing “2”
     Cracks/damage/wear → Replace the oil pump assembly.

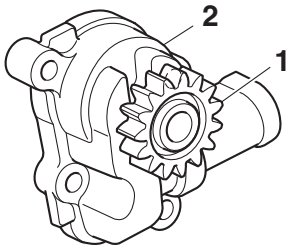

2. Measure:
   - Inner-rotor-to-outer-rotor-tip clearance “a”
   - Outer-rotor-to-oil-pump-housing clearance “b”

	Inner-rotor-to-outer-rotor-tip clearance **0.060–0.120 mm (0.0024–0.0047 in)** **Limit** **0.20 mm (0.0079 in)** **Outer-rotor-to-oil-pump-housing clearance** **0.09–0.17 mm (0.0035–0.0067 in)** **Limit** **0.24 mm (0.0094 in)**

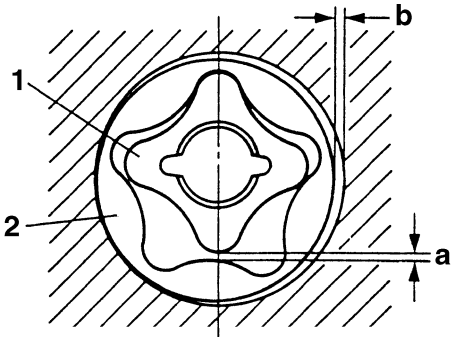

1. Inner rotor
2. Outer rotor

3. Check:
   - Oil pump operation
     Rough movement → Repeat steps (1) and (2) or replace the oil pump assembly.

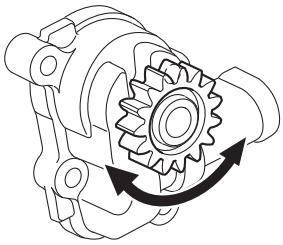

EAS30338
CHECKING THE RELIEF VALVE
1. Check:
   - Relief valve “1”
   - Spring “2”
     Damage/wear → Replace the oil pump assembly.

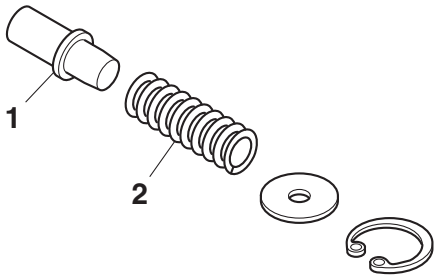

EAS30342
ASSEMBLING THE OIL PUMP
1. Lubricate:
   - Inner rotor
   - Outer rotor
     (with the recommended lubricant)

	Recommended lubricant **Engine oil**

2. Lubricate:
   - Oil pump driven gear
     (with the recommended lubricant)

	Recommended lubricant **Engine oil**

3. Install:
   - Inner rotor “1”
   - Outer rotor “2”
   - Oil pump driven gear “3”
   - Pin “4”
   - Oil pump cover “5”

- Oil pump cover screw “6”

	Oil pump cover screw **2.0 Nm (0.20 m·kgf, 1.4 ft·lbf)**

TIP

Align the pin in the oil pump shaft with the grooves “a” in the inner rotor.

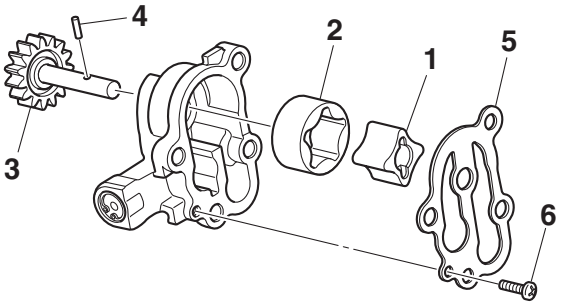

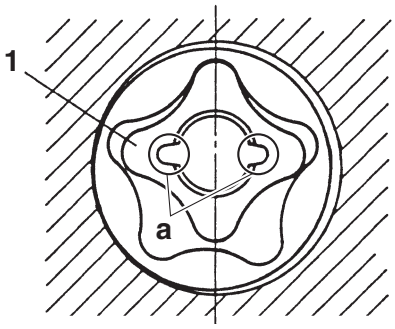

4. Check:
   - Oil pump operation
     Refer to “CHECKING THE OIL PUMP” on page 5-65.

EAS30343

INSTALLING THE OIL PUMP

1. Install:
   - Oil pump “1”
   - Oil pump bolts “2”

	Oil pump bolt **10 Nm (1.0 m·kgf, 7.2 ft·lbf)**

ECA21870

NOTICE

After tightening the bolts, make sure the oil pump turns smoothly.

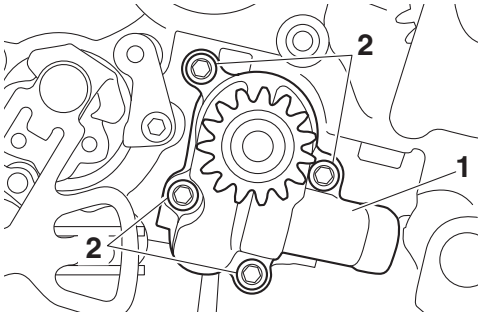

EAS20177

OIL PAN

Removing the oil pan

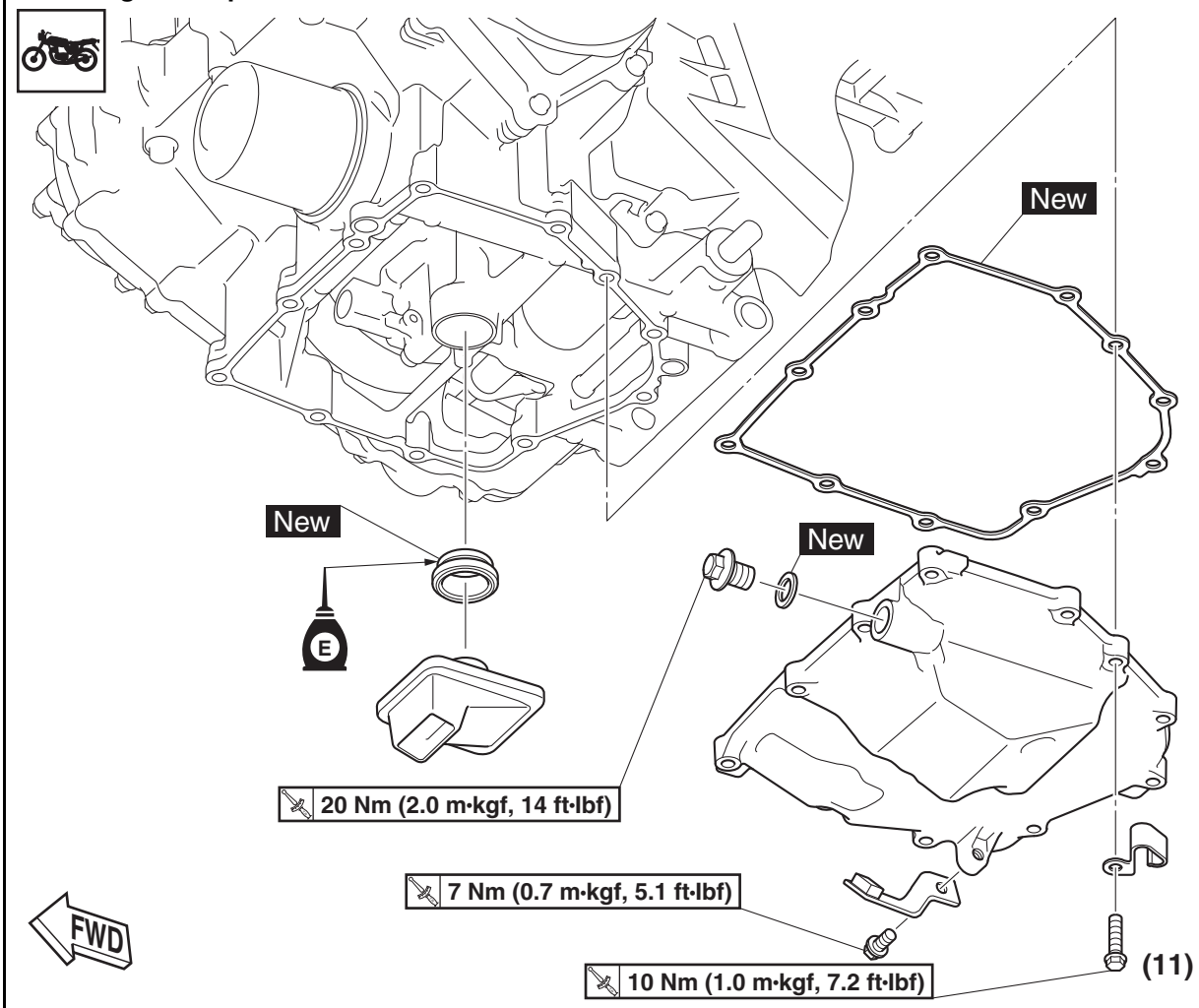

Order	Job/Parts to remove	Q'ty	Remarks
	Rider seat		Refer to "GENERAL CHASSIS (1)" on page 4-1.
	Side panel assemblies		Refer to "GENERAL CHASSIS (2)" on page 4-3.
	Bottom cowling		Refer to "GENERAL CHASSIS (3)" on page 4-8.
	Coolant reservoir		Refer to "RADIATOR" on page 6-1.
	Footrest assembly (right)		Refer to "REAR BRAKE" on page 4-47.
	Exhaust pipe		Refer to "ENGINE REMOVAL" on page 5-3.
	Engine oil		Drain. Refer to "CHANGING THE ENGINE OIL" on page 3-22.

Removing the oil pan

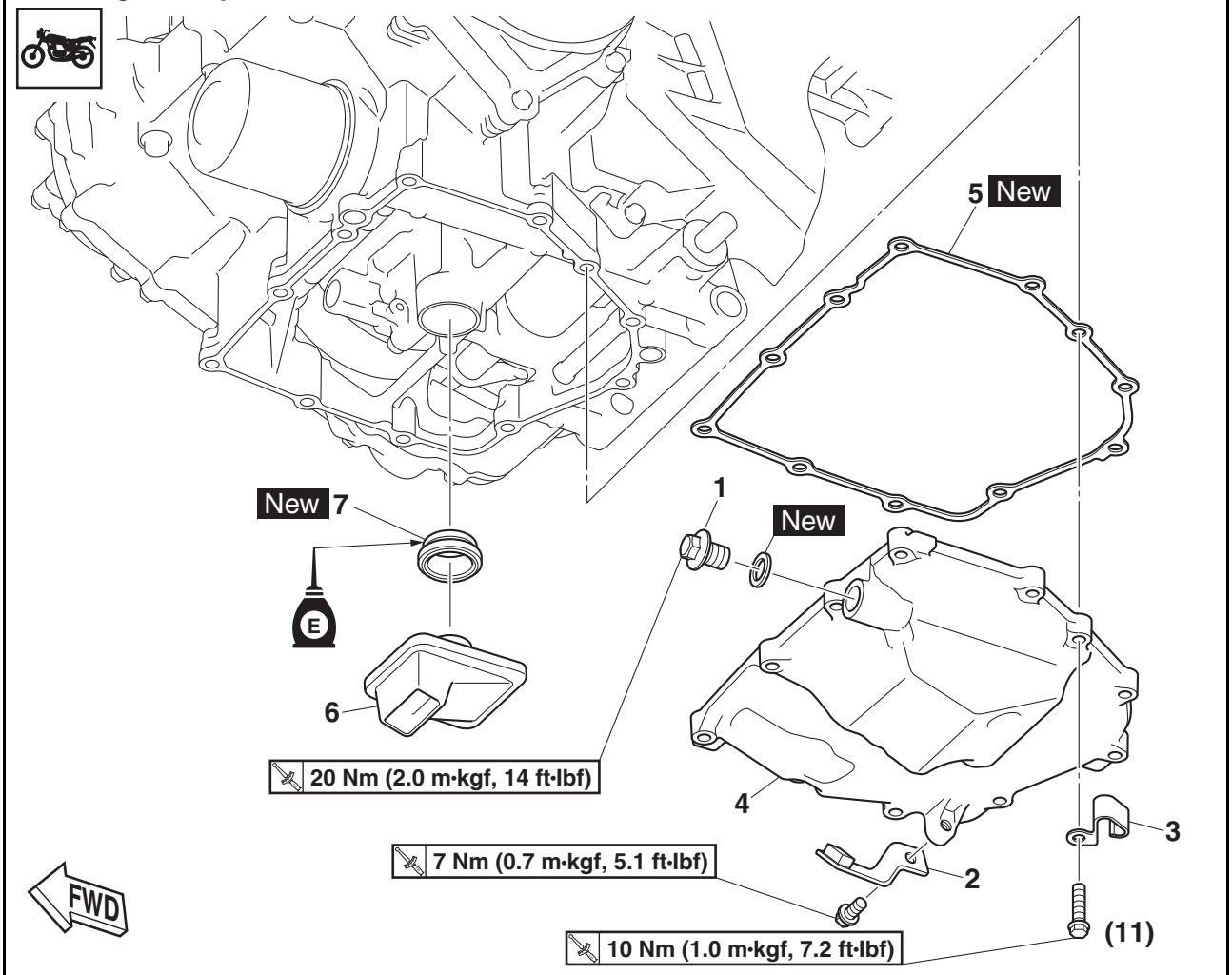

Order	Job/Parts to remove	Q'ty	Remarks
1	Engine oil drain bolt	1	
2	Bottom cowling bracket (rear)	1	
3	Holder	1	
4	Oil pan	1	
5	Oil pan gasket	1	
6	Oil strainer	1	
7	Oil strainer seal	1	

EAS31069
CHECKING THE OIL STRAINER
1. Check:
   - Oil strainer
     Damage → Replace.
     Contaminants → Clean with solvent.

EAS31070
INSTALLING THE OIL PAN
1. Install:
   - Oil strainer seal “1” New
   - Oil strainer “2”

TIP

Insert the projection “a” on the lower crankcase between the projections “b” on the oil strainer.

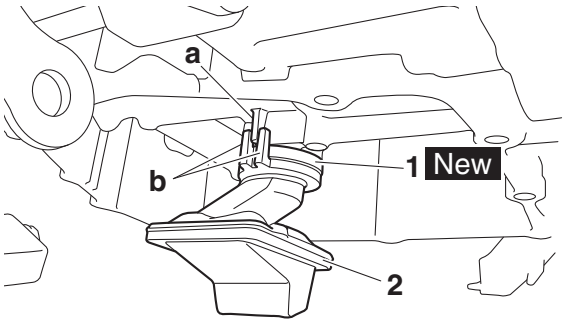

2. Install:
   - Oil pan gasket New
   - Oil pan “1”
   - Bottom cowling bracket (rear) “2”

Oil pan bolt
10 Nm (1.0 m·kgf, 7.2 ft·lbf)
Bottom cowling bracket bolt (rear side)
7 Nm (0.7 m·kgf, 5.1 ft·lbf)

TIP

- Tighten the oil pan bolts in stages and in a crisscross pattern.
- While holding the bottom cowling bracket (rear) so that the section “a” on the bracket contacts the oil pan, tighten the bottom cowling bracket bolt (rear).

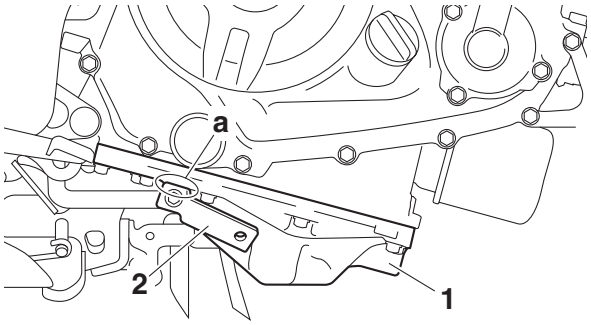

3. Install:
   - Gasket “1” New
   - Engine oil drain bolt “2”

Engine oil drain bolt
20 Nm (2.0 m·kgf, 14 ft·lbf)

TIP

Install the new gasket as shown in the illustration.

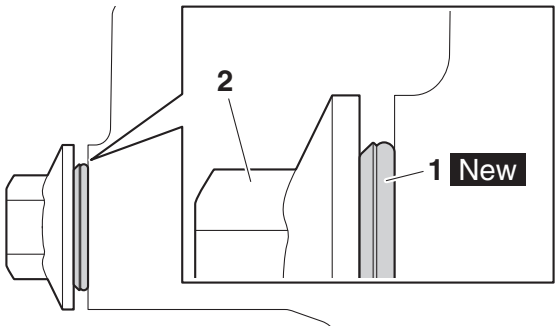

EAS20059

CRANKCASE

Removing the crankcase breather cover and switches

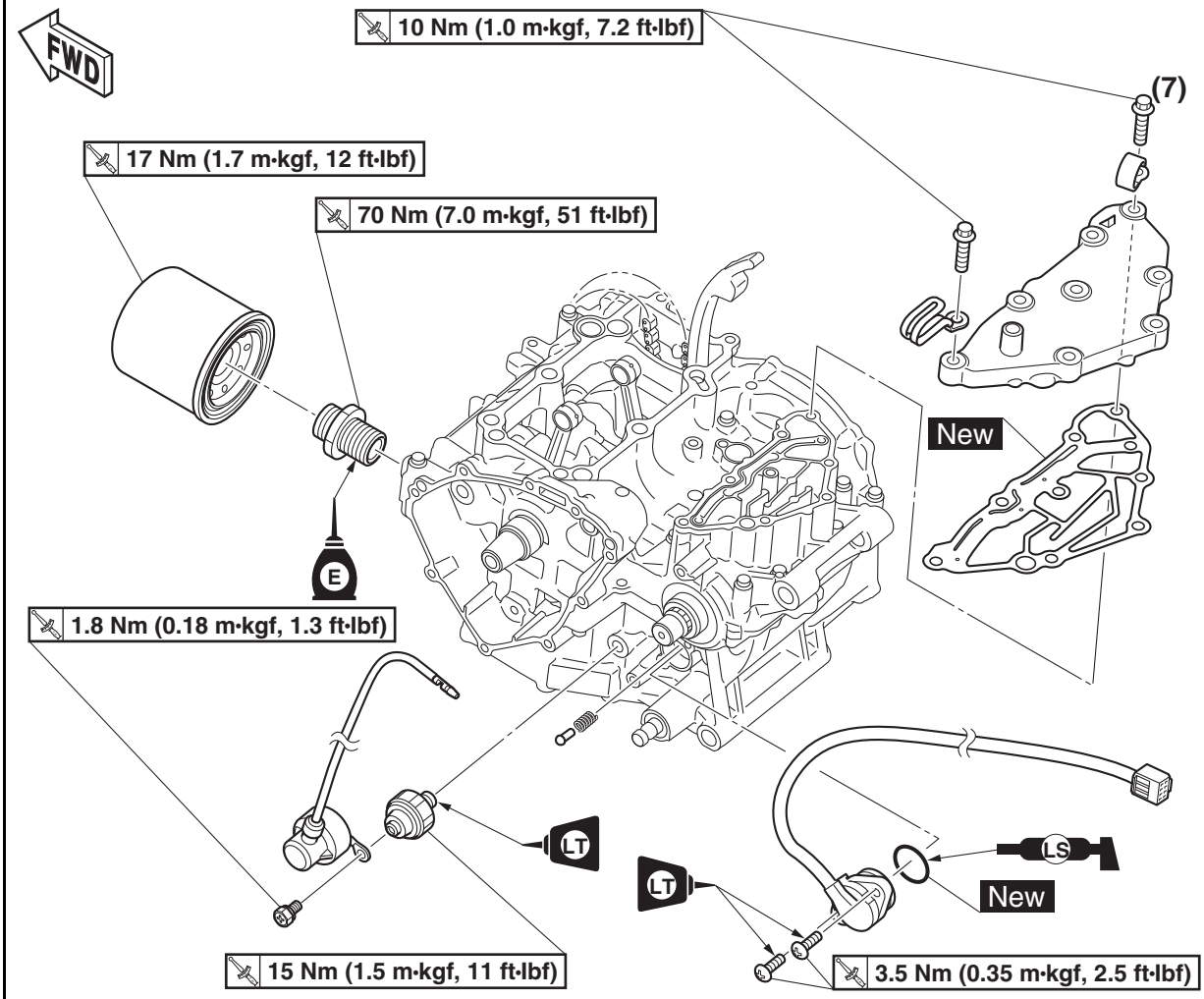

Order	Job/Parts to remove	Q'ty	Remarks
	Engine		Refer to "ENGINE REMOVAL" on page 5-3.
	Cylinder head cover/Intake camshaft/Exhaust camshaft		Refer to "CAMSHAFTS" on page 5-13.
	Cylinder head		Refer to "CYLINDER HEAD" on page 5-22.
	Piston		Refer to "CYLINDER AND PISTONS" on page 5-35.
	Generator rotor assembly		Refer to "GENERATOR AND STARTER CLUTCH" on page 5-41.
	Starter motor		Refer to "ELECTRIC STARTER" on page 5-46.
	Water pump housing		Refer to "WATER PUMP" on page 6-7.
	Clutch housing		Refer to "CLUTCH" on page 5-50.

Removing the crankcase breather cover and switches

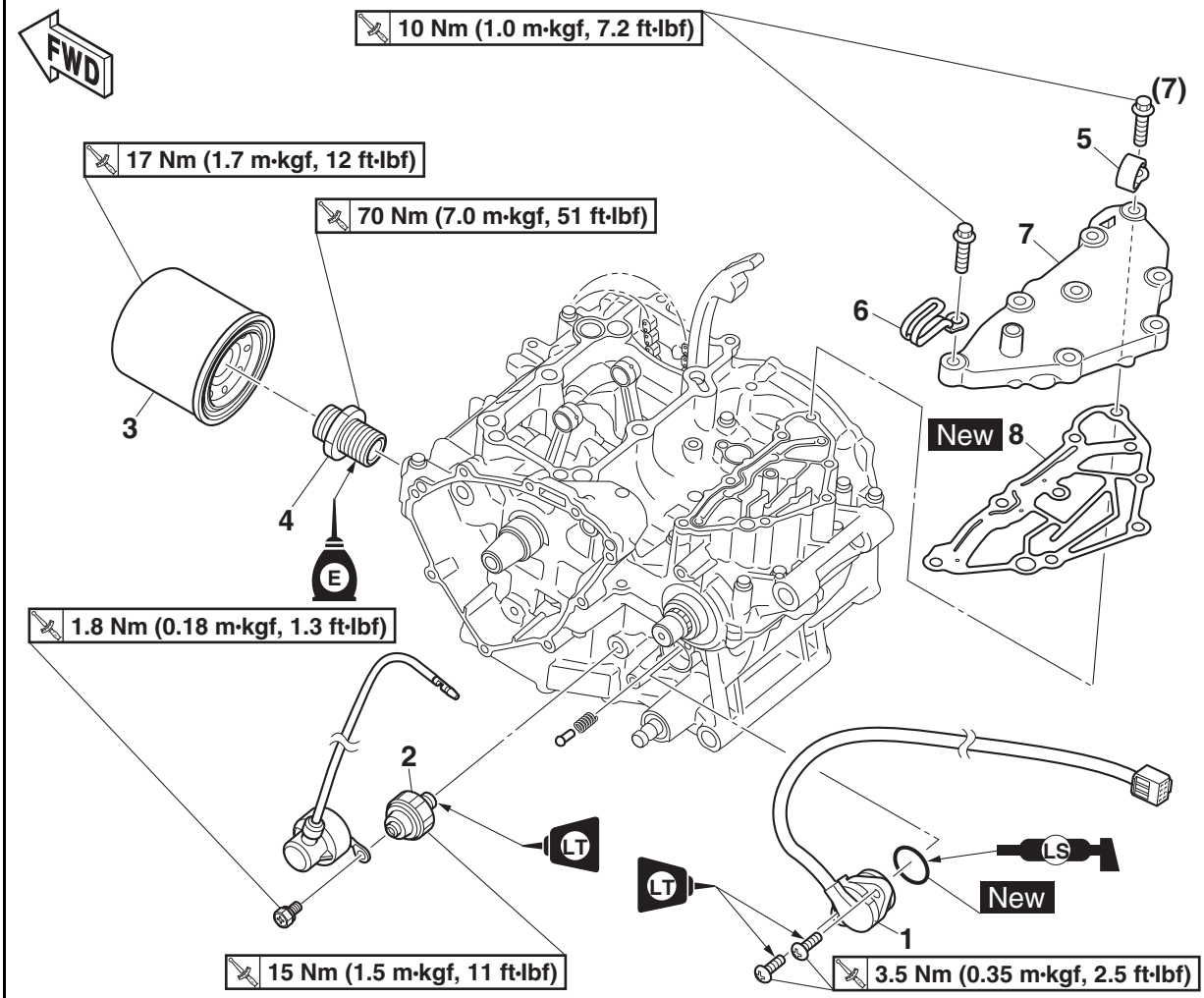

Order	Job/Parts to remove	Q'ty	Remarks
	Oil pump assembly		Refer to "OIL PUMP" on page 5-63.
	Oil strainer		Refer to "OIL PAN" on page 5-67.
	Drive sprocket		Refer to "CHAIN DRIVE" on page 4-92.
1	Gear position switch	1	
2	Oil pressure switch	1	
3	Oil filter cartridge	1	
4	Oil filter cartridge union bolt	1	
5	Holder 1	1	
6	Holder 2	1	
7	Crankcase breather cover	1	
8	Crankcase breather cover gasket	1	

Separating the crankcase

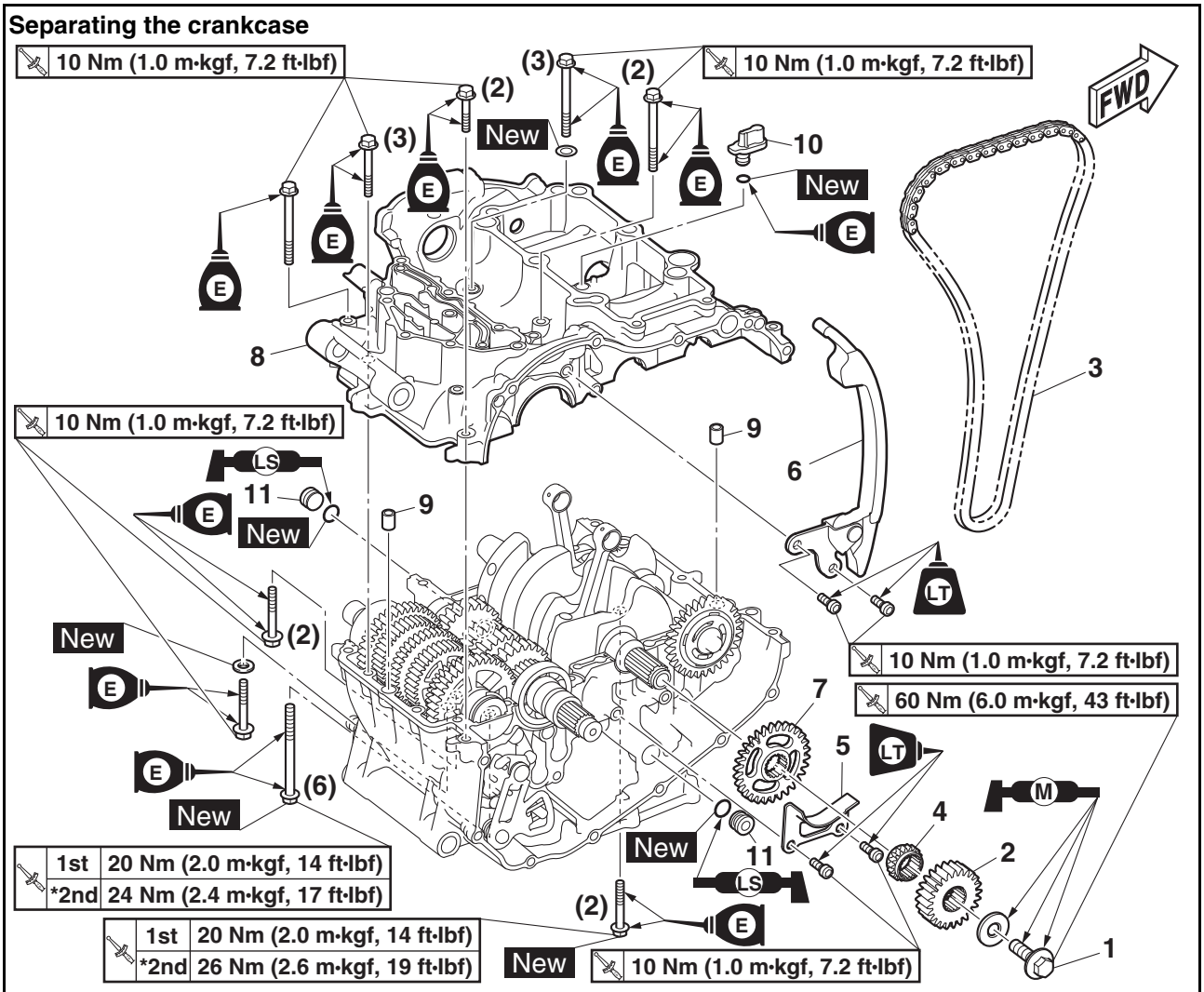

*** Following the tightening order, loosen the bolt one by one, and then retighten it to the specific torque (after loosening a bolt, retighten it before loosening the next bolt).**

Order	Job/Parts to remove	Q'ty	Remarks
1	Primary drive gear bolt	1	
2	Primary drive gear	1	
3	Timing chain	1	
4	Timing chain sprocket	1	
5	Timing chain guide (lower side)	1	
6	Timing chain guide (intake side)	1	
7	Balancer drive gear	1	
8	Upper crankcase	1	
9	Dowel pin	2	
10	Oil nozzle	1	
11	Plug	2	

EAS30389
DISASSEMBLING THE CRANKCASE

1. Remove:
   - Oil filter cartridge “1”

TIP

Remove the oil filter cartridge with an oil filter wrench “2”.

Oil filter wrench
90890-01426
Oil filter wrench
YU-38411

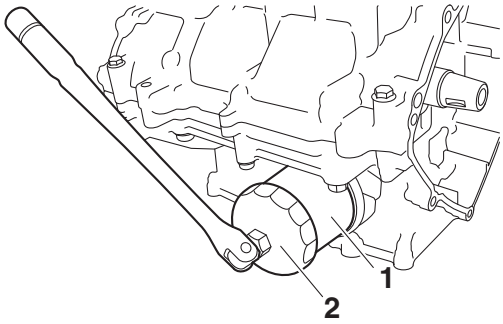

2. Install:
   - Clutch housing (temporarily)
     Refer to “CLUTCH” on page 5-50.
3. Remove:
   - Primary drive gear bolt “1”
   - Washer “2”
   - Primary drive gear “3”

TIP

Place an aluminum plate “a” between the primary drive gear and the clutch housing “4”, and then loosen the primary drive gear bolt.

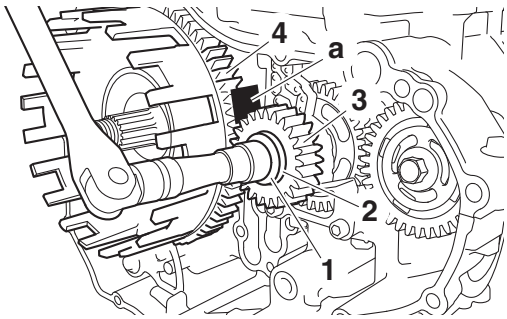

4. Remove:
   - Crankcase bolt (×21)

TIP

- Loosen each bolt 1/4 of a turn at a time, in stages and in a crisscross pattern. After all of the bolts are fully loosened, remove them.
- Loosen the bolts in the proper sequence as shown.

- M6 × 35 mm bolt (×2): “1”, “2”
- M6 × 45 mm bolt (×5): “3”, “7”, “8”, “12”, “13”
- M6 × 45 mm bolt (×1) (with copper washer): “12A”
- M6 × 65 mm bolt (×3) (bolt with copper washer): “4”, “5”, “9”
- M6 × 65 mm bolt (×3): “6”, “10”, “11”
- M8 × 50 mm bolt (×2): “14”, “15”
- M8 × 80 mm bolt (×6): “16”–“21”

A

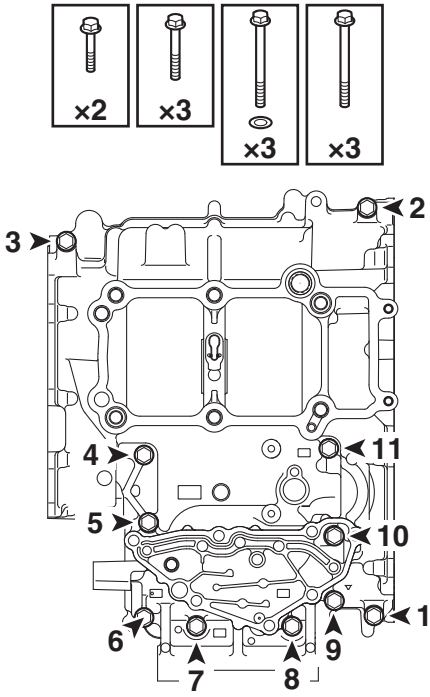

B

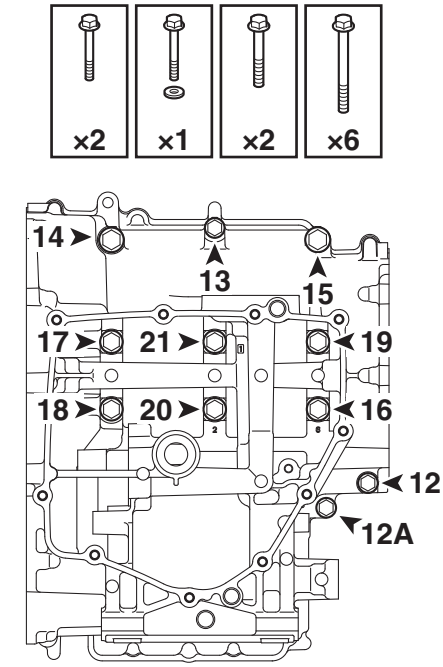

A. Upper crankcase
B. Lower crankcase

5. Remove:
   - Upper crankcase
   - Dowel pins

ECA13900

NOTICE

Tap on one side of the crankcase with a soft-face hammer. Tap only on reinforced portions of the crankcase, not on the crankcase mating surfaces. Work slowly and carefully and make sure the crankcase halves separate evenly.

EAS31378

CHECKING THE BALANCER DRIVE GEAR

1. Check:
   - Balancer drive gear
     Damage/wear → Replace the balancer drive gear and balancer shaft assembly as a set.
     Excessive noise during operation → Replace the balancer drive gear and balancer shaft assembly as a set.

EAS30880

CHECKING THE TIMING CHAIN AND TIMING CHAIN GUIDE (INTAKE SIDE)

1. Check:
   - Timing chain
     Damage/stiffness → Replace the timing chain, camshaft sprockets, and crankshaft as a set.
   - Timing chain guide (intake side)
     Damage/wear → Replace.

EAS30390

CHECKING THE CRANKCASE

1. Thoroughly wash the crankcase halves in a mild solvent.
2. Thoroughly clean all the gasket surfaces and crankcase mating surfaces.
3. Check:
   - Crankcase
     Cracks/damage → Replace.
   - Oil delivery passages
     Obstruction → Blow out with compressed air.

EAS30744

CHECKING THE OIL NOZZLES

1. Check:
   - Oil nozzle
     Damage/wear → Replace.
   - Oil passage
     Obstruction → Blow out with compressed air.

EAS30397

ASSEMBLING THE CRANKCASE

1. Lubricate:
   - Crankshaft journal bearing inner surface (with the recommended lubricant)

	Recommended lubricant **Engine oil**

2. Apply:
   - Sealant
     (onto the crankcase mating surfaces)

	Yamaha bond No. 1215 **90890-85505** **(Three bond No.1215®)**

ECA20880

NOTICE

Do not allow any sealant to come into contact with the oil gallery, crankshaft journal bearings, or balancer shaft journal bearings.

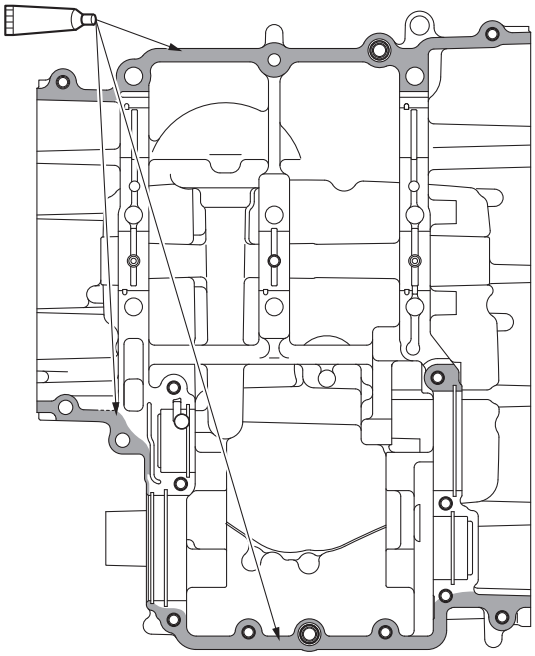

3. Install:
   - Dowel pins
4. Set the shift drum assembly and transmission gears in the neutral position.
5. Install:
   - Upper crankcase “1”
     (onto the lower crankcase “2”)

ECA13980

NOTICE

Before tightening the crankcase bolts, make sure the transmission gears shift correctly when the shift drum assembly is turned by hand.

TIP

- Be sure to fit the pin “a” on the main axle assembly into the hole “b” in the upper crankcase.
- Thoroughly wipe off any sealant that protrudes onto the contact surfaces of the generator cover gasket and clutch cover gasket.
- When assembling the crankcase, check that sealant protrudes from between the crankcase halves. Do not wipe off the protruding sealant.

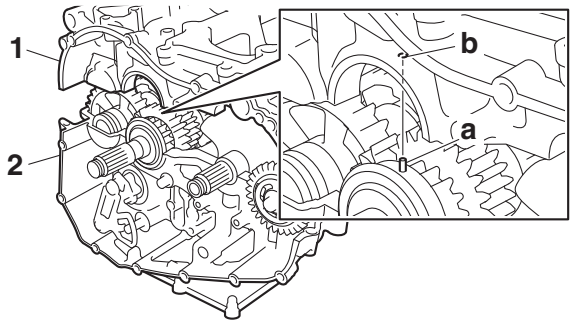

6. Install:
   - Crankcase bolt (×21)

TIP

- Lubricate the bolts “1”–“15” and “17”–“21” threads and mating surfaces with engine oil.
- Lubricate the mating surface of the bolt “16” with engine oil and apply Yamaha bond No. 1215 to the bolt threads.
- Finger tighten the crankcase bolts.

Yamaha bond No. 1215
90890-85505
(Three bond No.1215®)

- M8 × 80 mm bolt (×6): “1”–“6”
- M8 × 50 mm bolt (×2): “7”, “8”
- M6 × 45 mm bolt (×5): “9”, “10”, “14”, “15”, “19”
- M6 × 45 mm bolt (×1) (bolt with copper washer New): “10A”
- M6 × 65 mm bolt (×3): “11”, “12”, “16”
- M6 × 65 mm bolt (×3) (bolts with copper washers New): “13”, “17”, “18”
- M6 × 35 mm bolt (×2): “20”, “21”

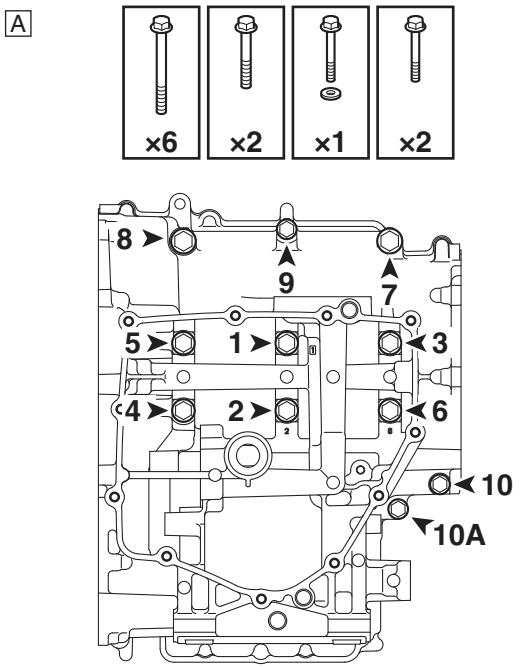

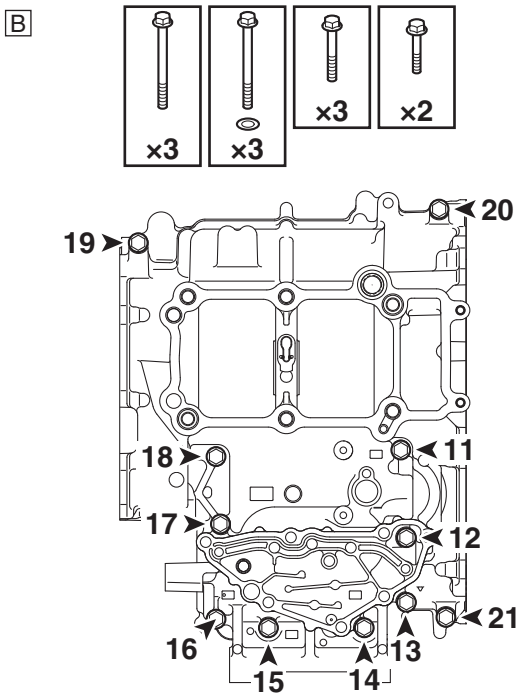

A. Lower crankcase
B. Upper crankcase

7. Tighten:
   - Crankcase bolts “1”–“6”
   - Crankcase bolts “7”–“8”

Crankcase bolts "1"–"6"
1st: 20 Nm (2.0 m·kgf, 14 ft·lbf)
***2nd: Loosen and retighten the bolts one at a time to 24 Nm (2.4 m·kgf, 17 ft·lbf).**
Crankcase bolts "7"–"8"
1st: 20 Nm (2.0 m·kgf, 14 ft·lbf)
***2nd: Loosen and retighten the bolts one at a time to 26 Nm (2.6 m·kgf, 19 ft·lbf).**

* After loosening a bolt, retighten it before loosening the next bolt.

TIP

Tighten the bolts in the proper tightening sequence as shown.

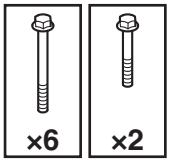

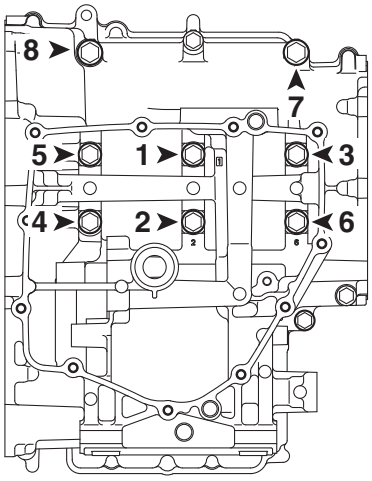

8. Tighten:
   - Crankcase bolts "9"–"21"

Crankcase bolts "9"–"21"
10 Nm (1.0 m·kgf, 7.2 ft·lbf)

TIP

Tighten the bolts in the proper tightening sequence as shown.

A

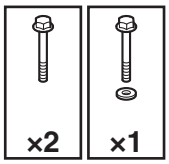

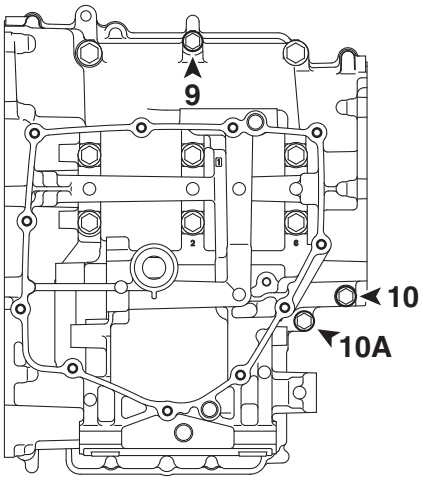

B

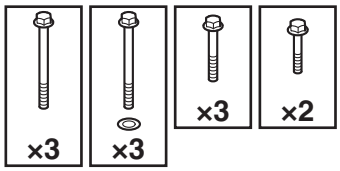

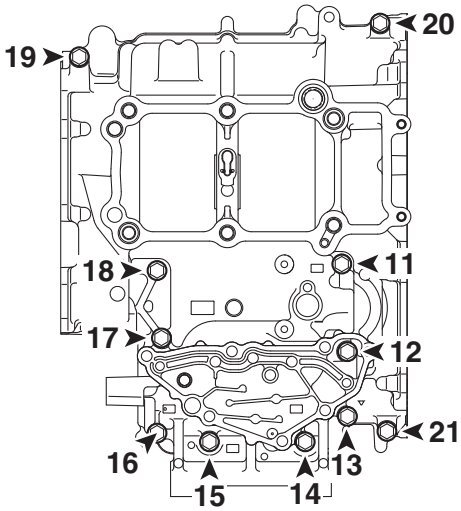

A. Lower crankcase
B. Upper crankcase

9. Install:
   - Balancer drive gear "1"

TIP

Align the punch mark "a" in the balancer drive gear with the punch mark "b" in the balancer driven gear.

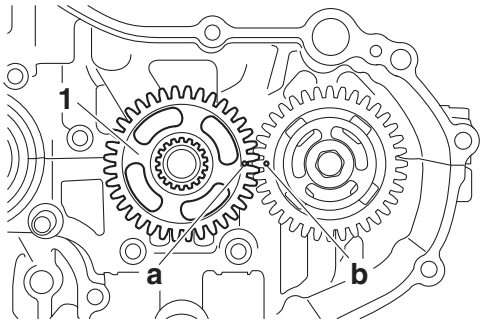

10.Install:
- Timing chain guide (lower side)
- Timing chain sprocket
- Timing chain
- Primary drive gear “1”
- Washer “2”
- Primary drive gear bolt “3”
- Clutch housing (temporarily)
  Refer to “CLUTCH” on page 5-50.

Timing chain guide bolt (lower side bolt)
10 Nm (1.0 m·kgf, 7.2 ft·lbf)
LOCTITE®
Primary drive gear bolt
60 Nm (6.0 m·kgf, 43 ft·lbf)
Balancer driven gear bolt
35 Nm (3.5 m·kgf, 25 ft·lbf)

TIP
- Lubricate the threads and contact surface of the primary drive gear bolt and the contact surfaces of the washer with molybdenum disulfide grease.
- Install the washer with its chamfered side “a” facing away from the primary drive gear.
- Place an aluminum plate “b” between the primary drive gear and the clutch housing “4”, and then tighten the primary drive gear bolt.
- When loosen the balancer driven gear bolt “5”, place an aluminum plate “c” between the primary drive gear and the clutch housing “4”, and then tighten the balancer driven gear bolt to specification torque.

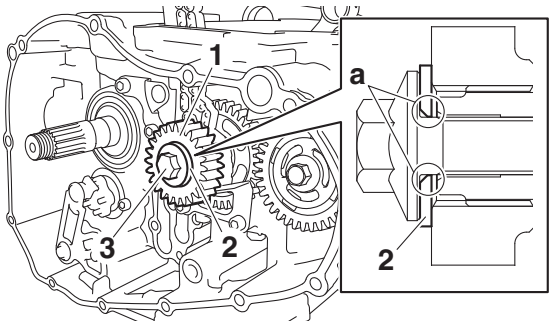

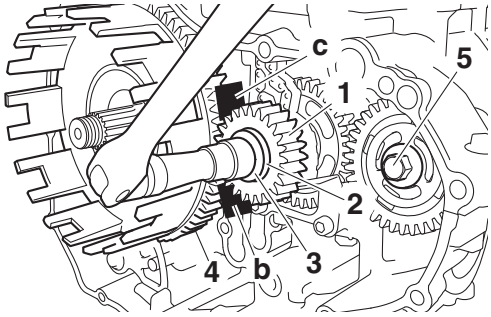

11.Install:
- Holder 2 “1”
- Holder 1 “2”

TIP
- Position the holder 2 within the range shown in the illustration.
- Make sure that the holder 1 contacts the projection “a” on the crankcase breather cover.

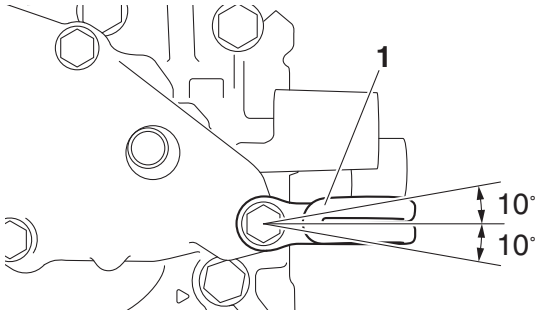

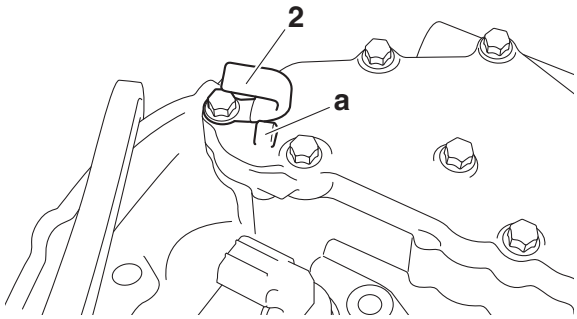

EAS31313
INSTALLING THE OIL PRESSURE SWITCH AND GEAR POSITION SWITCH

1. Install:
   - Oil pressure switch “1”
   - Oil pressure switch lead “2”

Oil pressure switch
15 Nm (1.5 m·kgf, 11 ft·lbf)
LOCTITE®
Oil pressure switch lead bolt
1.8 Nm (0.18 m·kgf, 1.3 ft·lbf)

TIP

- Apply locking agent (LOCTITE®) to the threads “a” of the oil pressure switch. However, do not apply locking agent (LOCTITE®) to the portion “b” of the oil pressure switch.
- Install the oil pressure switch lead terminal with the lead routed upward.

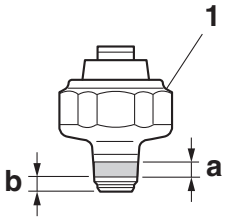

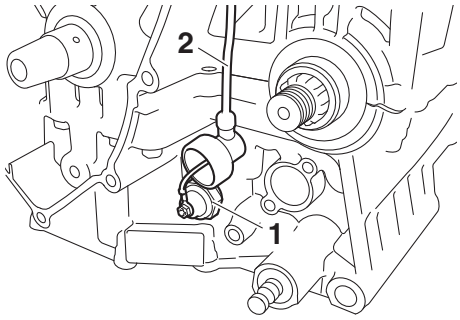

2. Install:
   - O-ring “1” New
   - Gear position switch “2”

Gear position switch screw
3.5 Nm (0.35 m·kgf, 2.5 ft·lbf)
LOCTITE®

TIP

- Lubricate the O-ring with lithium-soap-based grease.
- While holding the gear position switch so that the flange “a” on the switch contacts the crankcase, tighten the gear position switch screws.

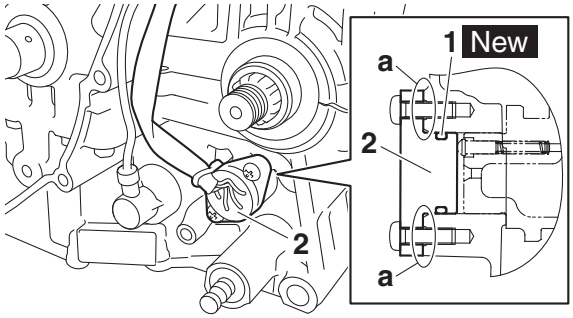

EAS20178

CRANKSHAFT AND BALANCER SHAFT

Removing the crankshaft, connecting rod and balancer shaft

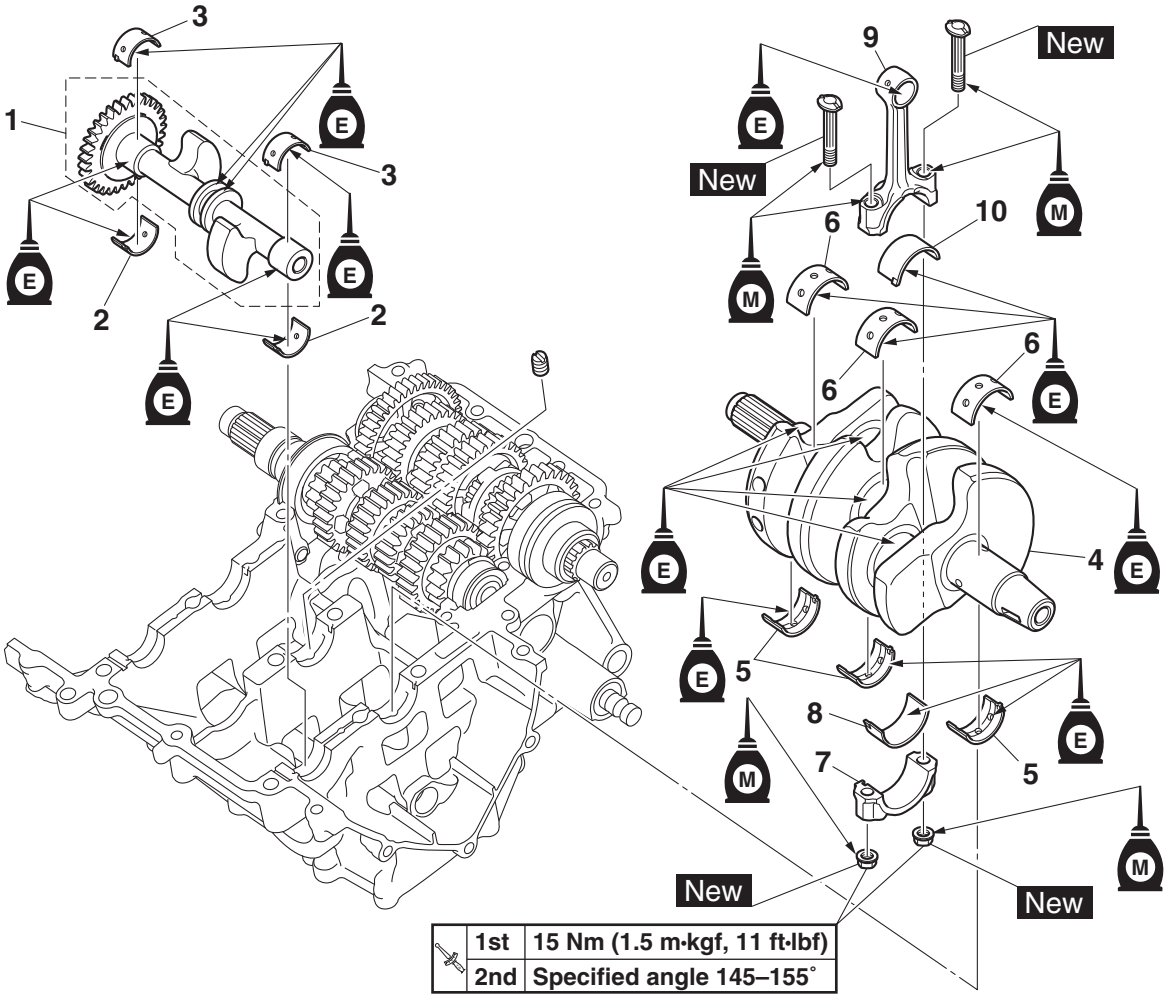

Order	Job/Parts to remove	Q'ty	Remarks
	Crankcase		Separate. Refer to "CRANKCASE" on page 5-70.
1	Balancer shaft assembly	1	
2	Balancer shaft journal lower bearing	2	
3	Balancer shaft journal upper bearing	2	
4	Crankshaft	1	
5	Crankshaft journal lower bearing	3	
6	Crankshaft journal upper bearing	3	
7	Connecting rod cap	2	
8	Big end lower bearing	2	
9	Connecting rod	2	
10	Big end upper bearing	2	

Removing the crankshaft, connecting rod and balancer shaft

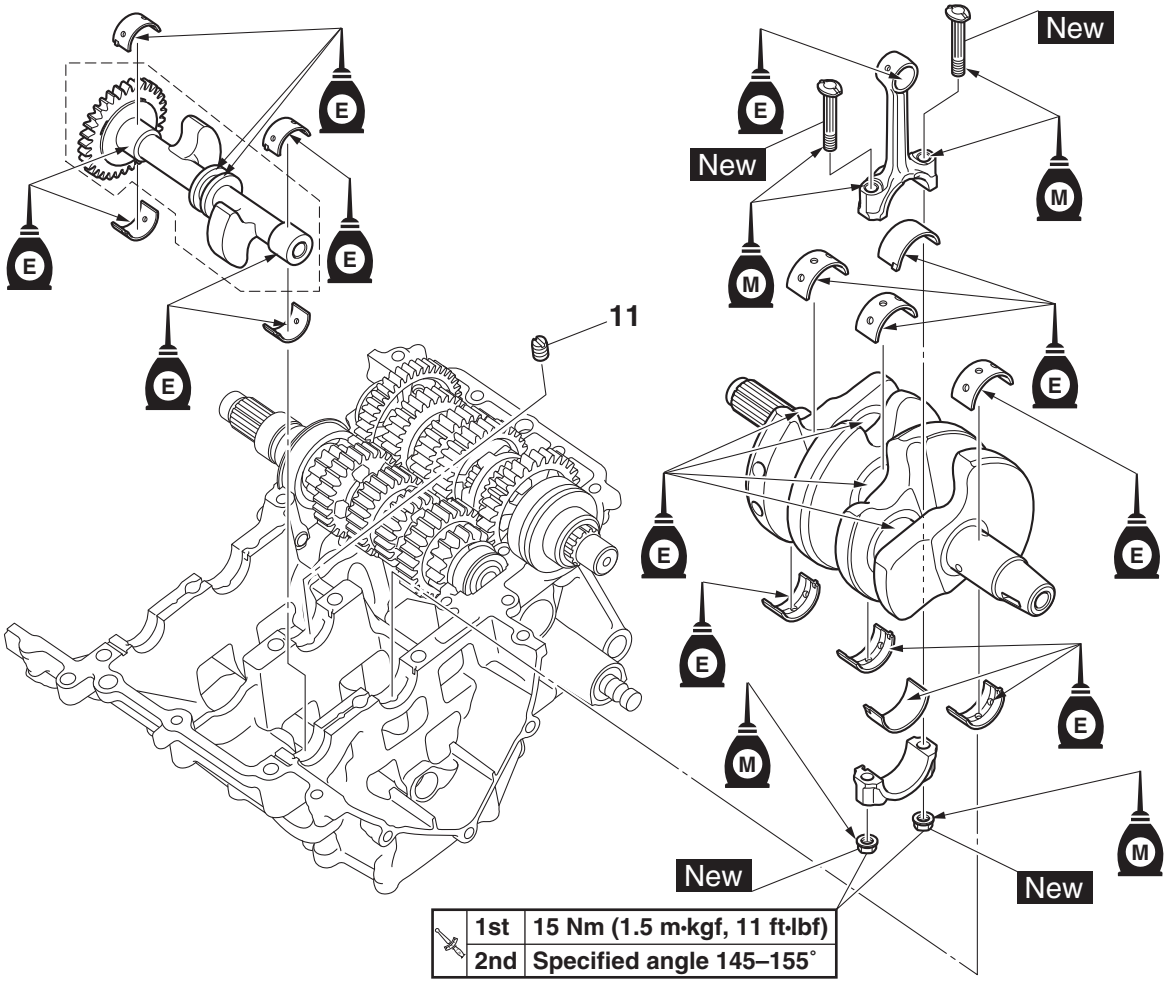

Order	Job/Parts to remove	Q'ty	Remarks
11	Oil nozzle	1	

Disassembling the balancer shaft assembly

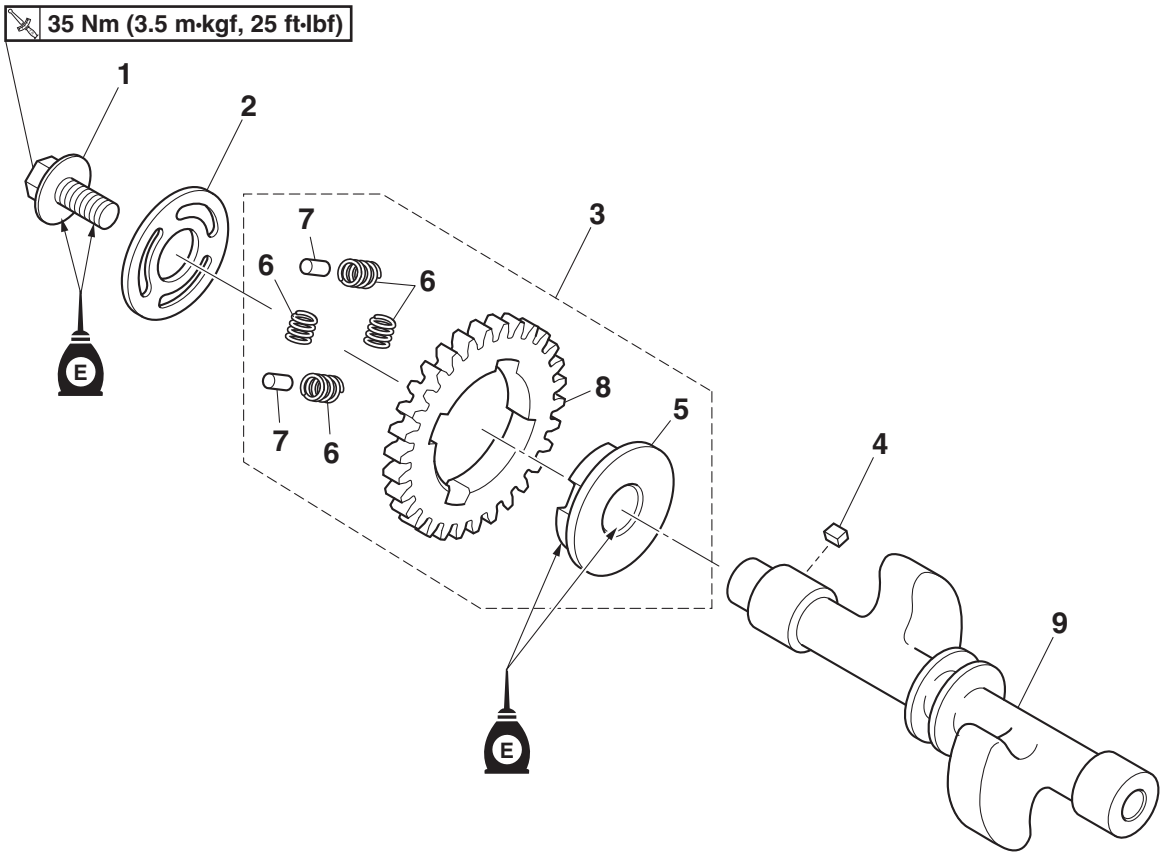

Order	Job/Parts to remove	Q'ty	Remarks
1	Balancer driven gear bolt	1	
2	Washer	1	
3	Balancer driven gear assembly	1	
4	Straight key	1	
5	Buffer boss	1	
6	Spring	4	
7	Dowel pin	2	
8	Balancer driven gear	1	
9	Balancer shaft	1	

EAS31072
REMOVING THE BALANCER SHAFT JOURNAL BEARINGS
1. Remove:
   - Balancer shaft journal lower bearings (from the lower crankcase)
   - Balancer shaft journal upper bearings (from the upper crankcase)

TIP

Identify the position of each balancer shaft journal bearing so that it can be reinstalled in its original place.

EAS31074
REMOVING THE CRANKSHAFT JOURNAL BEARINGS
1. Remove:
   - Crankshaft journal lower bearings (from the lower crankcase)
   - Crankshaft journal upper bearings (from the upper crankcase)

TIP

Identify the position of each crankshaft journal bearing so that it can be reinstalled in its original place.

EAS31314
REMOVING THE CONNECTING RODS
The following procedure applies to both of the connecting rods.
1. Remove:
   - Connecting rod cap
   - Connecting rod
   - Big end bearings

TIP

Identify the position of each connecting rod cap, connecting rod, and big end bearing so that it can be reinstalled in its original place.

EAS31076
CHECKING THE BALANCER SHAFT
1. Check:
   - Balancer driven gear
     Cracks/damage/wear → Replace the balancer drive gear and balancer driven gear as a set.
     Excessive noise during operation → Replace the balancer drive gear and balancer driven gear as a set.
2. Check:
   - Balancer shaft assembly
     Cracks/damage/wear → Replace the balancer shaft assembly and journal bearings.
     Dirt → Clean.
   - Bearings
     Damage/wear → Replace.
3. Measure:
   - Balancer shaft-journal-to-balancer shaft-journal-bearing clearance
     Out of specification → Replace the balancer shaft journal bearings.

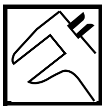

Balancer shaft journal to balancer shaft bearing clearance
0.021–0.045 mm (0.0008–0.0018 in)

ECA18400
NOTICE

Do not interchange the balancer shaft journal bearings. To obtain the correct balancer shaft-journal-to-balancer shaft-journal-bearing clearance and prevent engine damage, the balancer shaft journal bearings must be installed in their original positions.

▼▼▼▼▼▼▼▼▼▼▼▼▼▼▼▼▼▼▼▼▼▼▼▼▼▼▼▼▼▼▼▼▼▼▼

a. Clean the balancer shaft journal bearings, balancer shaft journals, and bearing portions of the crankcase.
b. Install the balancer shaft journal lower bearings “1” and the balancer shaft assembly into the lower crankcase.

TIP

Align the projections “a” on the balancer shaft journal lower bearings with the notches “b” in the lower crankcase.

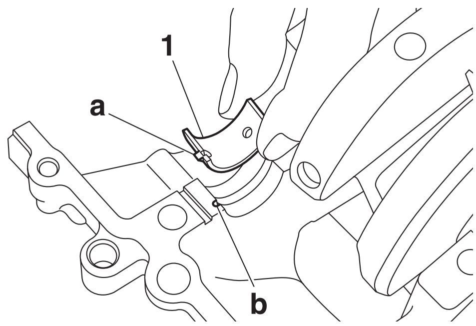

c. Put a piece of Plastigauge® “2” on each balancer shaft journal.

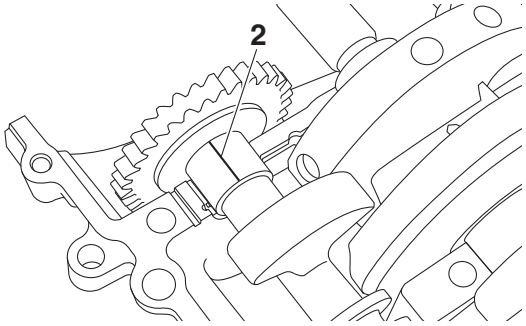

d. Install the balancer shaft journal upper bearings “3” into the upper crankcase and assemble the crankcase halves.

TIP

- Align the projections “c” of the balancer shaft journal upper bearings with the notches “d” in the upper crankcase.
- Do not move the balancer shaft until the clearance measurement has been completed.

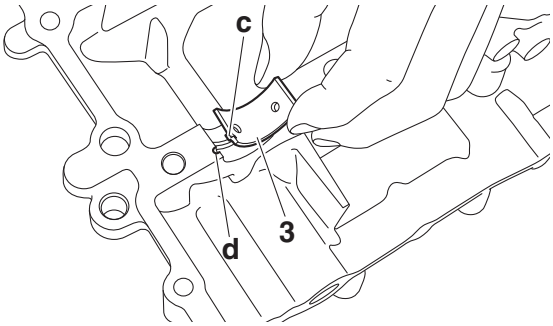

e. Tighten the bolts to specification in the proper tightening sequence.
   Refer to “ASSEMBLING THE CRANKCASE” on page 5-74.
f. Remove the upper crankcase and the balancer shaft journal upper bearings.
g. Measure the compressed Plastigauge® width “e” on each balancer shaft journal.
   If the balancer shaft-journal-to-balancer shaft-journal-bearing clearance is out of specification, select replacement balancer shaft journal bearings.

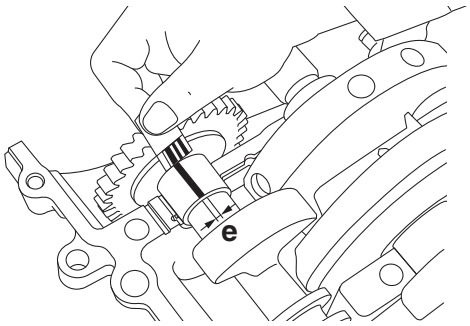

▲▲▲▲▲▲▲▲▲▲▲▲▲▲▲▲▲▲▲▲▲▲▲▲▲▲▲▲▲▲▲▲▲▲

4. Select:
   - Balancer shaft journal bearings (J_1–J_2)

TIP

- The numbers “A” stamped into the lower crankcase and the numbers “B” stamped into the balancer shaft web are used to determine the replacement balancer shaft journal bearing sizes.
- J_1–J_2 refer to the bearings shown in the crankcase and balancer shaft web illustration.

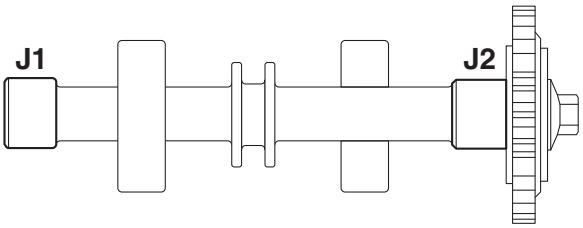

A

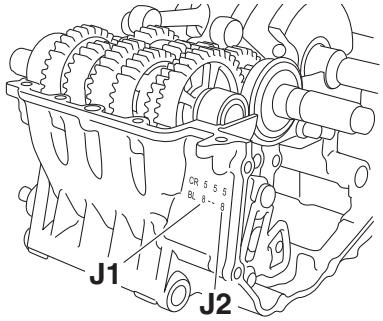

B

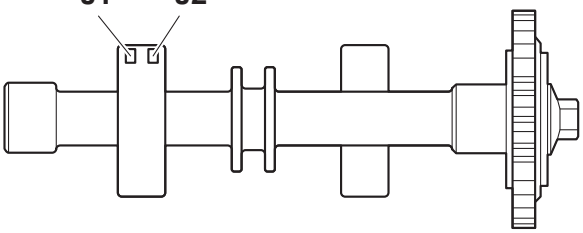

For example, if the crankcase J_1 and balancer shaft web J_1 numbers are 6 and 5 respectively, then the bearing size for J_1 is:

J_1 (crankcase) – J_1 (balancer shaft web) = 6 – 5 = 1 (blue)

Bearing color code
1. Blue 2. Black 3. Brown 4. Green 5. Yellow

EAS31075

CHECKING THE CRANKSHAFT

1. Measure:
   - Crankshaft runout
     Out of specification → Replace the crankshaft.

Runout limit
0.030 mm (0.0012 in)

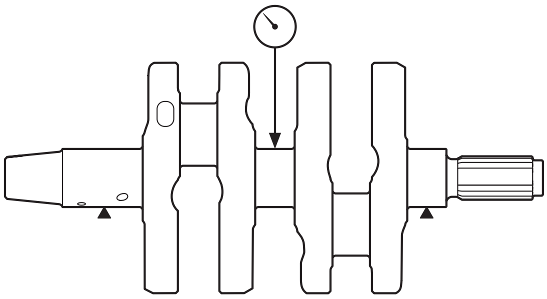

2. Check:
   - Crankshaft journal surfaces
   - Crankshaft pin surfaces
   - Bearing surfaces
     Scratches/wear → Replace the crankshaft.
3. Measure:
   - Crankshaft-journal-to-crankshaft-journal-bearing clearance
     Out of specification → Replace the crankshaft journal bearings.

Journal oil clearance
0.021–0.045 mm (0.0008–0.0018 in)

ECA13920

NOTICE

Do not interchange the crankshaft journal bearings. To obtain the correct crankshaft-journal-to-crankshaft-journal-bearing clearance and prevent engine damage, the crankshaft journal bearings must be installed in their original positions.

▼▼▼▼▼▼▼▼▼▼▼▼▼▼▼▼▼▼▼▼▼▼▼▼▼▼▼▼▼▼▼▼▼▼▼▼

a. Clean the crankshaft journal bearings, crankshaft journals, and bearing portions of the crankcase.

b. Install the crankshaft journal lower bearings “1” and the crankshaft into the lower crankcase.

TIP

Align the projections “a” on the crankshaft journal lower bearings with the notches “b” in the lower crankcase.

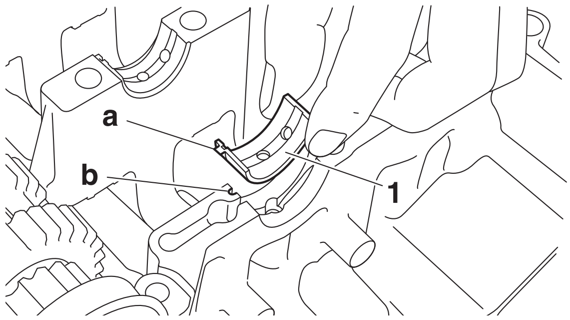

c. Put a piece of Plastigauge® “2” on each crankshaft journal.

TIP

Do not put the Plastigauge® over the oil hole in the crankshaft journal.

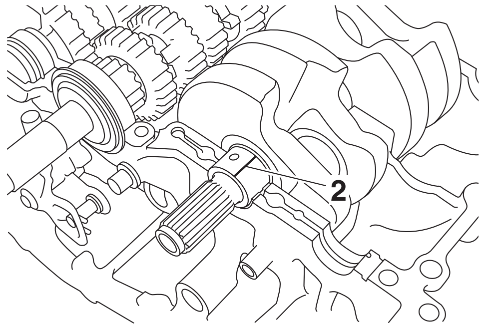

d. Install the crankshaft journal upper bearings “3” into the upper crankcase and assemble the crankcase halves.

TIP

- Align the projections “c” of the crankshaft journal upper bearings with the notches “d” in the upper crankcase.
- Do not move the crankshaft until the clearance measurement has been completed.

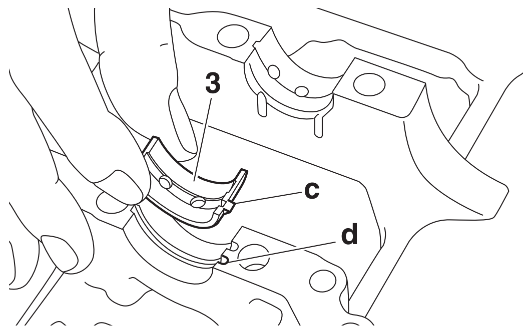

e. Tighten the bolts to specification in the proper tightening sequence.
   Refer to “ASSEMBLING THE CRANKCASE” on page 5-74.

f. Remove the upper crankcase and the crankshaft journal upper bearings.

g. Measure the compressed Plastigauge® width “e” on each crankshaft journal.

If the crankshaft-journal-to-crankshaft-journal-bearing clearance is out of specification, select replacement crankshaft journal bearings.

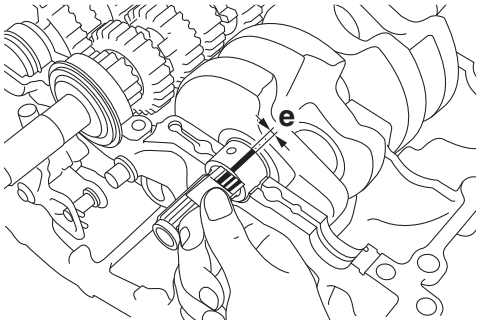

▲▲▲▲▲▲▲▲▲▲▲▲▲▲▲▲▲▲▲▲▲▲▲▲▲▲▲▲▲▲▲▲▲▲

4. Select:
   - Crankshaft journal bearings (J_1–J_3)

TIP

- The numbers "A" stamped into the crankcase and the numbers "B" stamped into the crankshaft web are used to determine the replacement crankshaft journal bearing sizes.
- J_1–J_3 refer to the bearings shown in the crankcase and crankshaft web illustration.

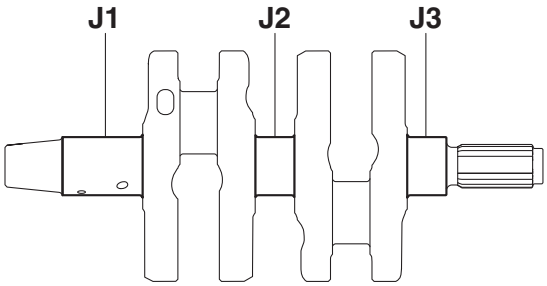

A

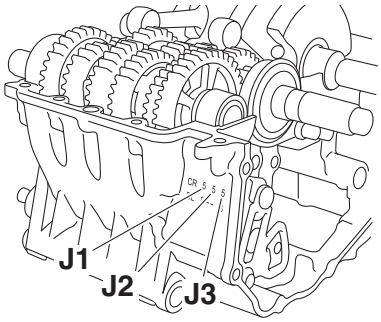

B

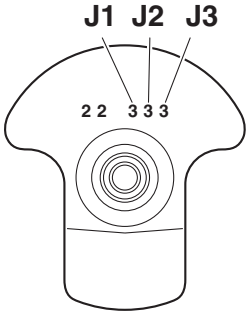

For example, if the crankcase J_1 and crankshaft web J_1 numbers are 5 and 3 respectively, then the bearing size for J_1 is:

J_1 (crankcase) – J_1 (crankshaft web) = 5 – 3 = 2 (Black)

Bearing color code
1.Blue 2.Black 3.Brown 4.Green 5.Yellow

EAS31315

CHECKING THE CONNECTING RODS

1. Measure:
   - Crankshaft-pin-to-big-end-bearing clearance
     Out of specification → Replace the big end bearings.

Oil clearance
0.036–0.060 mm (0.0014–0.0024 in)

▼▼▼▼▼▼▼▼▼▼▼▼▼▼▼▼▼▼▼▼▼▼▼▼▼▼▼▼▼▼▼▼▼▼

The following procedure applies to both of the connecting rods.

ECA13930

NOTICE

Do not interchange the big end bearings and connecting rods. To obtain the correct crankshaft-pin-to-big-end-bearing clearance and prevent engine damage, the big end bearings must be installed in their original positions.

a. Clean the big end bearings, crankshaft pins, and the inside of the connecting rod halves.
b. Install the big end upper bearing into the connecting rod and the big end lower bearing into the connecting rod cap.

TIP

Align the projections "a" on the big end bearings with the notches "b" in the connecting rod and connecting rod cap.

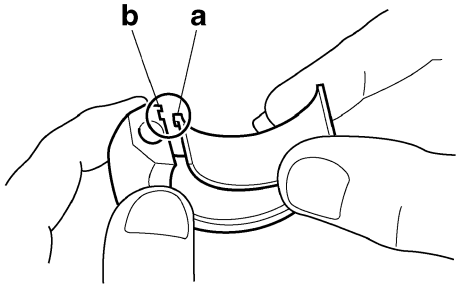

c. Put a piece of Plastigauge® “1” on the crankshaft pin.

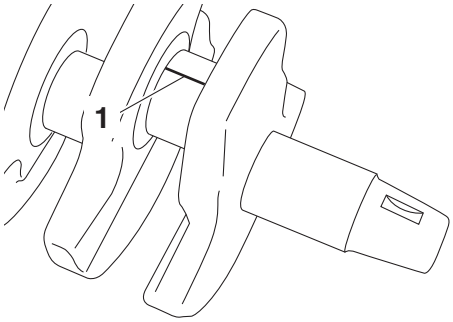

d. Assemble the connecting rod halves.

TIP

- Do not move the connecting rod or crankshaft until the clearance measurement has been completed.
- Lubricate the bolt threads and nut seats with molybdenum disulfide oil.
- Make sure the “Y” mark “c” on the connecting rod faces towards the left side of the crankshaft.
- Make sure the characters “d” on both the connecting rod and connecting rod cap are aligned.
- Make sure that the projections “e” on the connecting rod cap faces the same direction as the “Y” mark “c” on the connecting rod.

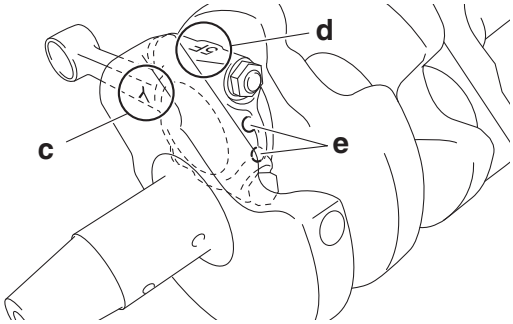

e. Tighten the connecting rod nuts.
Refer to “INSTALLING THE CONNECTING RODS” on page 5-87.

f. Remove the connecting rod and big end bearings.
Refer to “REMOVING THE CONNECTING RODS” on page 5-82.

g. Measure the compressed Plastigauge® width “f” on the crankshaft pin.
If the crankshaft-pin-to-big-end-bearing clearance is out of specification, select replacement big end bearings.

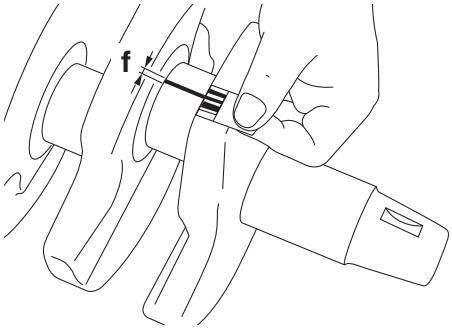

▲▲▲▲▲▲▲▲▲▲▲▲▲▲▲▲▲▲▲▲▲▲▲▲▲▲▲▲▲▲▲▲▲▲

2. Select:
   - Big end bearings (P_1–P_2)

TIP

- The numbers “A” stamped into the crankshaft web and the numbers “B” on the connecting rods are used to determine the replacement big end bearing sizes.
- P_1–P_2 refer to the bearings shown in the crankshaft illustration.

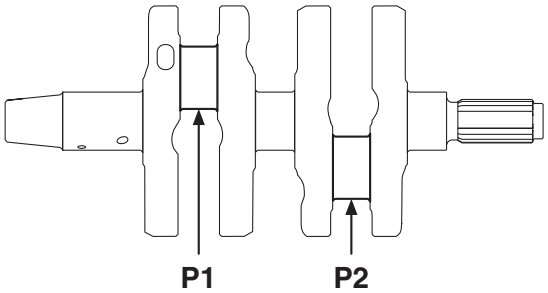

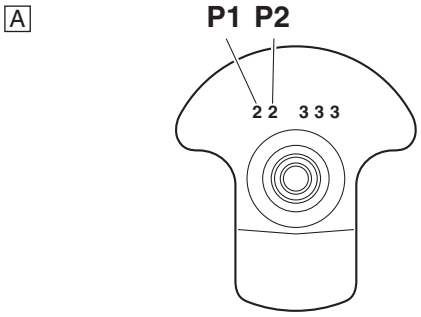

B

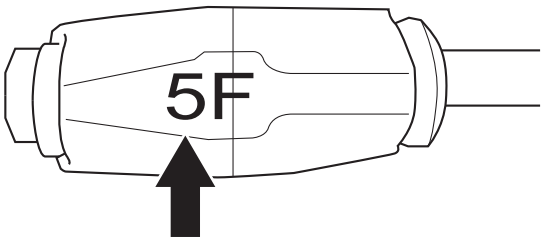

For example, if the connecting rod P_1 and the crankshaft web P_1 numbers are 5 and 2 respectively, then the bearing size for P_1 is:

P_1 (connecting rod) – P_1 (crankshaft web) = 5 – 2 = 3 (Brown)

	Bearing color code **1. Blue 2. Black 3. Brown 4. Green**

EAS31316

INSTALLING THE CONNECTING RODS

1. Lubricate:
   - Bolt threads
   - Nut seats
   (with the recommended lubricant)

	Recommended lubricant **Molybdenum disulfide oil**

2. Lubricate:
   - Crankshaft pins
   - Big end bearings
   - Connecting rod inner surface
   (with the recommended lubricant)

	Recommended lubricant **Engine oil**

3. Install:
   - Big end bearings
   - Connecting rods
   - Connecting rod caps
   (onto the crankshaft pins)

TIP

- Align the projections “a” on the big end bearings with the notches “b” in the connecting rods and connecting rod caps.
- Be sure to reinstall each big end bearing in its original place.
- Make sure the “Y” marks “c” on the connecting rods face towards the left side of the crankshaft.
- Make sure the characters “d” on both the connecting rod and connecting rod cap are aligned.
- Make sure that the projections “e” on the connecting rod cap faces the same direction as the “Y” mark “c” on the connecting rod.

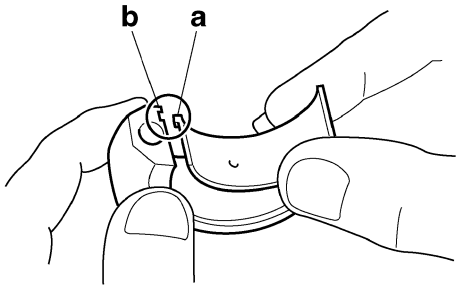

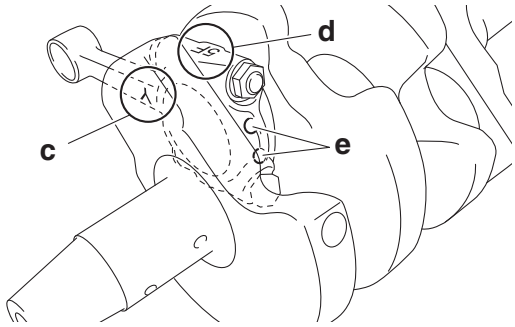

4. Tighten:
   - Connecting rod nuts

EWA13390

WARNING

- **Replace the connecting rod bolts and nuts with new ones.**
- **Clean the connecting rod bolts and nuts.**

TIP

Tighten the connecting rod nuts using the following procedure.

a. Tighten the connecting rod nuts with a torque wrench.

	Connecting rod nut (1st) **15 Nm (1.5 m·kgf, 11 ft·lbf)**

b. Put a mark “1” on the corner of the connecting rod nut “2” and the connecting rod cap “3”.

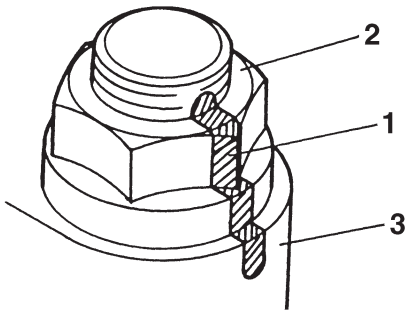

c. Tighten the connecting rod nuts further to reach the specified angle 145–155°.

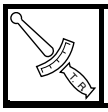	**Connecting rod nut (final)** **Specified angle 145–155°**

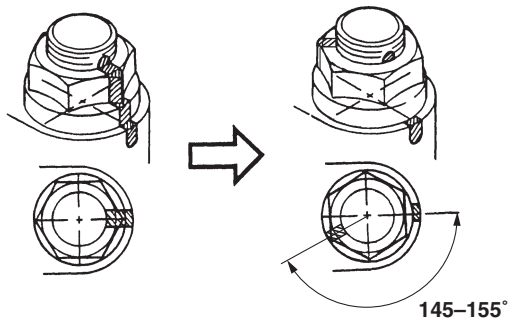

EWA13400

WARNING

If the connecting rod nut is tightened more than the specified angle, do not loosen the nut and then retighten it. Instead, replace the connecting rod bolt and nut with a new one and perform the procedure again.

ECA19930

NOTICE

- **Do not use a torque wrench to tighten the connecting rod nut to the specified angle.**
- **Tighten the nut until it is at the specified angle.**

TIP

On a hexagonal nut, note that the angle from one corner to another is 60°.

▲▲▲▲▲▲▲▲▲▲▲▲▲▲▲▲▲▲▲▲▲▲▲▲▲▲▲▲▲▲▲▲▲▲

EAS31077

INSTALLING THE CRANKSHAFT

1. Install:
   - Crankshaft journal upper bearings (into the upper crankcase)
   - Crankshaft journal lower bearings (into the lower crankcase)

TIP

- Align the projections “a” on the crankshaft journal bearings “1” with the notches “b” in the crankcase.
- Be sure to install each crankshaft journal bearing in its original place.

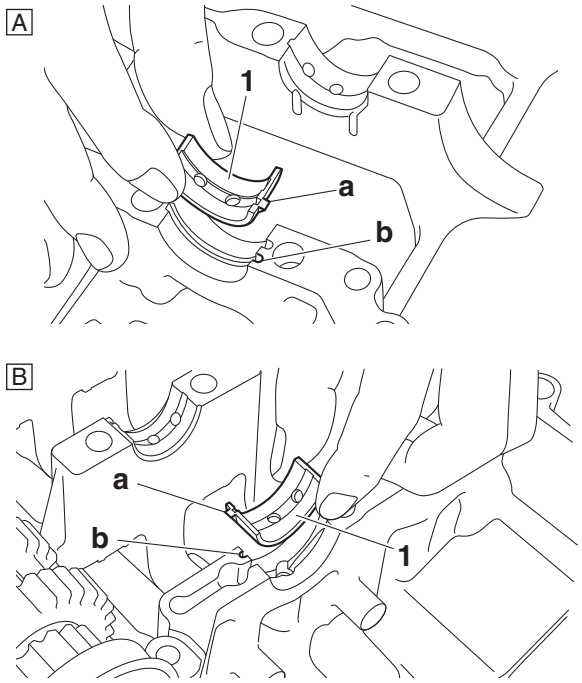

A. Upper crankcase
B. Lower crankcase

EAS31122

ASSEMBLING THE BALANCER SHAFT ASSEMBLY

1. Assemble:
   - Balancer driven gear assembly “1”

TIP

Align the punch mark “a” in the balancer driven gear with the punch mark “b” in the buffer boss.

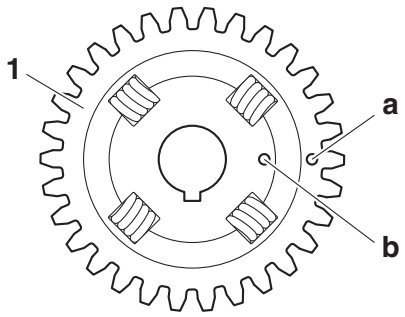

2. Install:
   - Washer “1”
   - Balancer driven gear bolt “2”

TIP

- Lubricate the balancer driven gear bolt threads and mating surface with engine oil.
- Make sure that the balancer shaft “3” is inserted into the washer, and then temporarily tighten the balancer driven gear bolt.
- After install the crankcase, tighten the balancer driven gear bolt to specification.
  Refer to “CRANKCASE” on page 5-70.

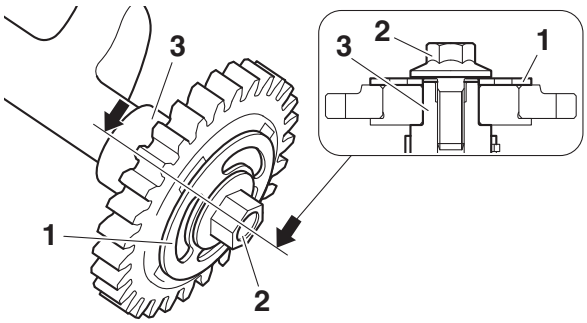

EAS31078

INSTALLING THE BALANCER SHAFT ASSEMBLY

1. Install:
   - Balancer shaft journal upper bearings (into the upper crankcase)
   - Balancer shaft journal lower bearings (into the lower crankcase)

TIP

- Align the projections “a” on the balancer shaft journal bearings “1” with the notches “b” in the crankcase.
- Be sure to install each balancer shaft journal bearing in its original place.

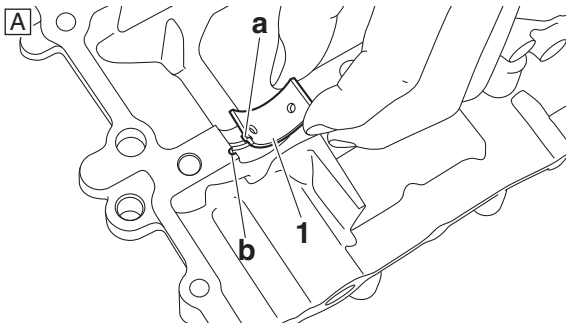

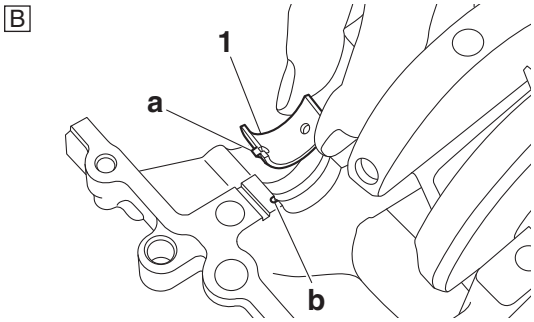

A. Upper crankcase
B. Lower crankcase

EAS20062

TRANSMISSION

Removing the transmission, shift drum assembly, and shift forks

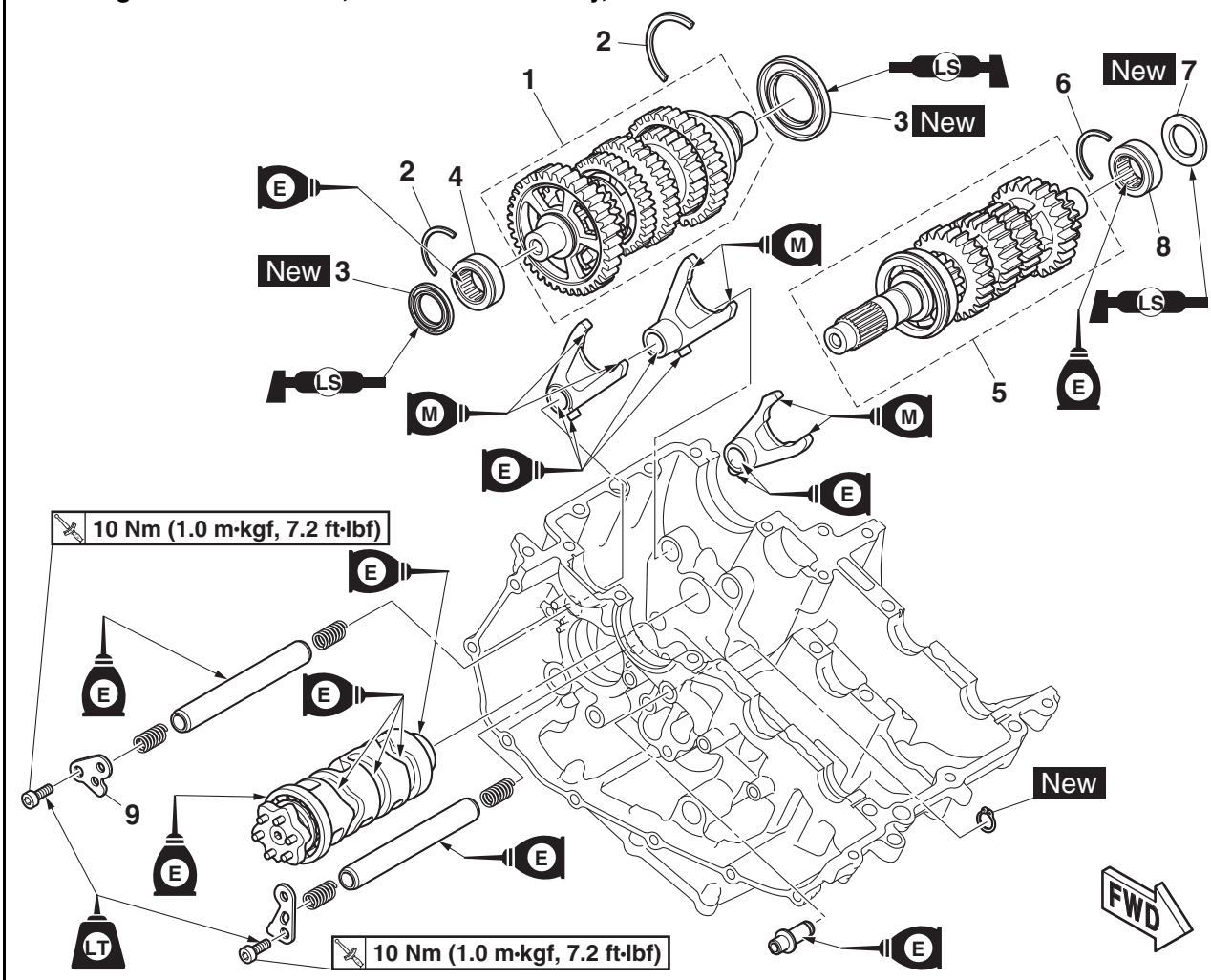

Order	Job/Parts to remove	Q'ty	Remarks
	Crankcase		Separate. Refer to "CRANKCASE" on page 5-70.
	Shift shaft		Refer to "SHIFT SHAFT" on page 5-58.
1	Drive axle assembly	1	
2	Clip	2	
3	Oil seal	2	
4	Bearing	1	
5	Main axle assembly	1	
6	Clip	1	
7	Oil seal	1	
8	Bearing	1	
9	Shift fork guide bar retainer 1	1	

Removing the transmission, shift drum assembly, and shift forks

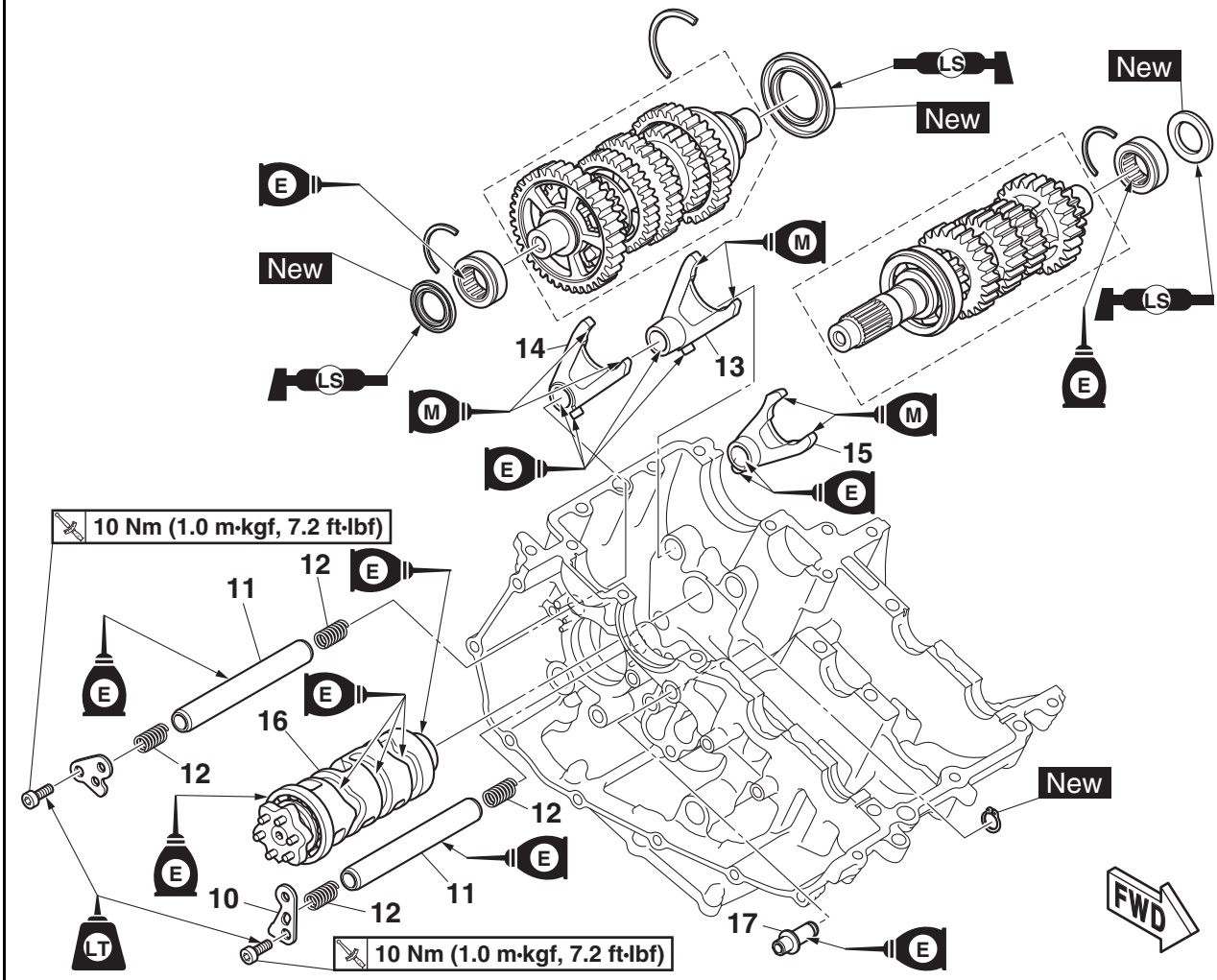

Order	Job/Parts to remove	Q'ty	Remarks
10	Shift fork guide bar retainer 2	1	
11	Shift fork guide bar	2	
12	Spring	4	
13	Shift fork "L"	1	
14	Shift fork "R"	1	
15	Shift fork "C"	1	
16	Shift drum assembly	1	
17	Oil pump idle gear shaft	1	

Disassembling the main axle assembly

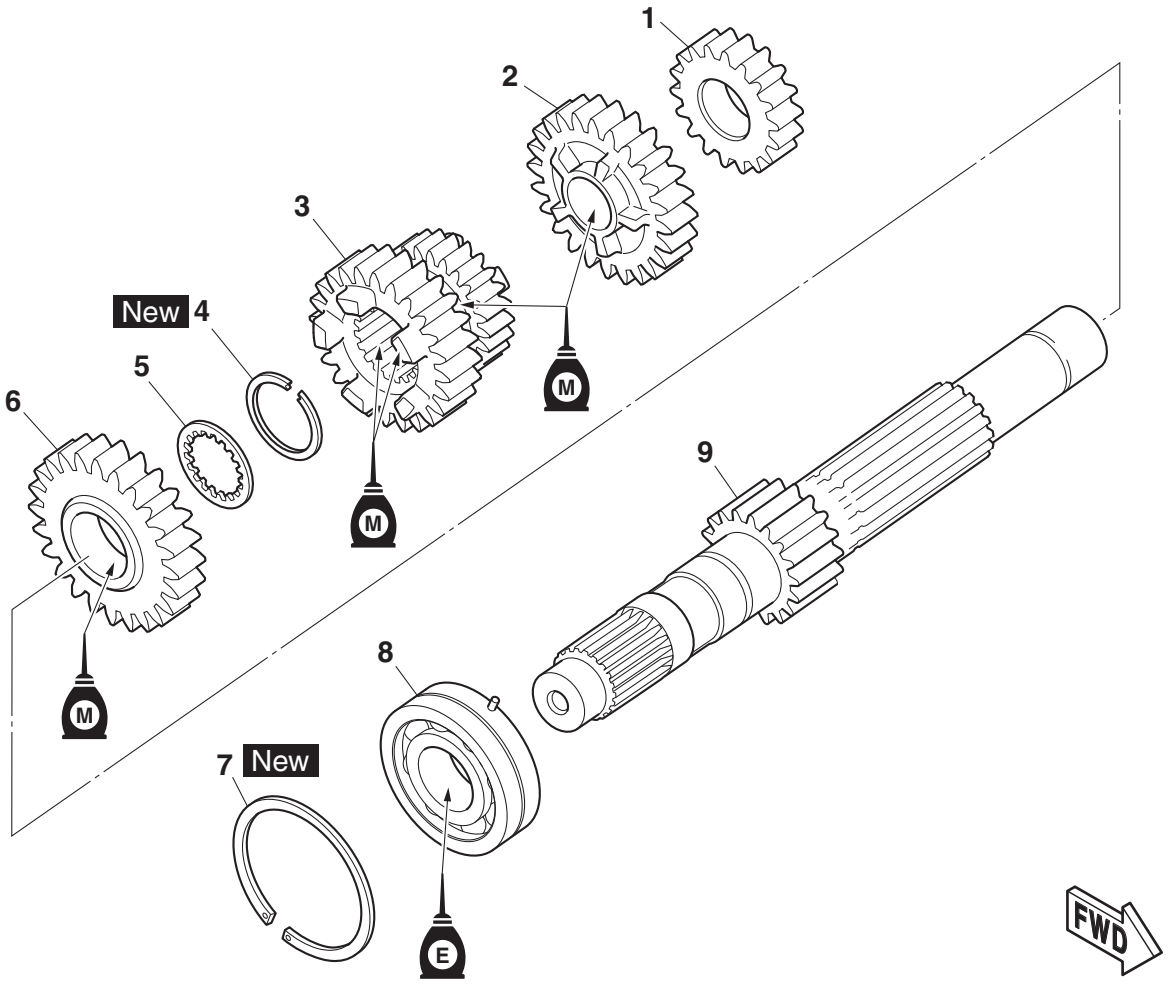

Order	Job/Parts to remove	Q'ty	Remarks
1	2nd pinion gear	1	
2	6th pinion gear	1	
3	3rd pinion gear	1	
4	Circlip	1	
5	Washer	1	
6	5th pinion gear	1	
7	Circlip	1	
8	Bearing	1	
9	Main axle	1	

Disassembling the drive axle assembly

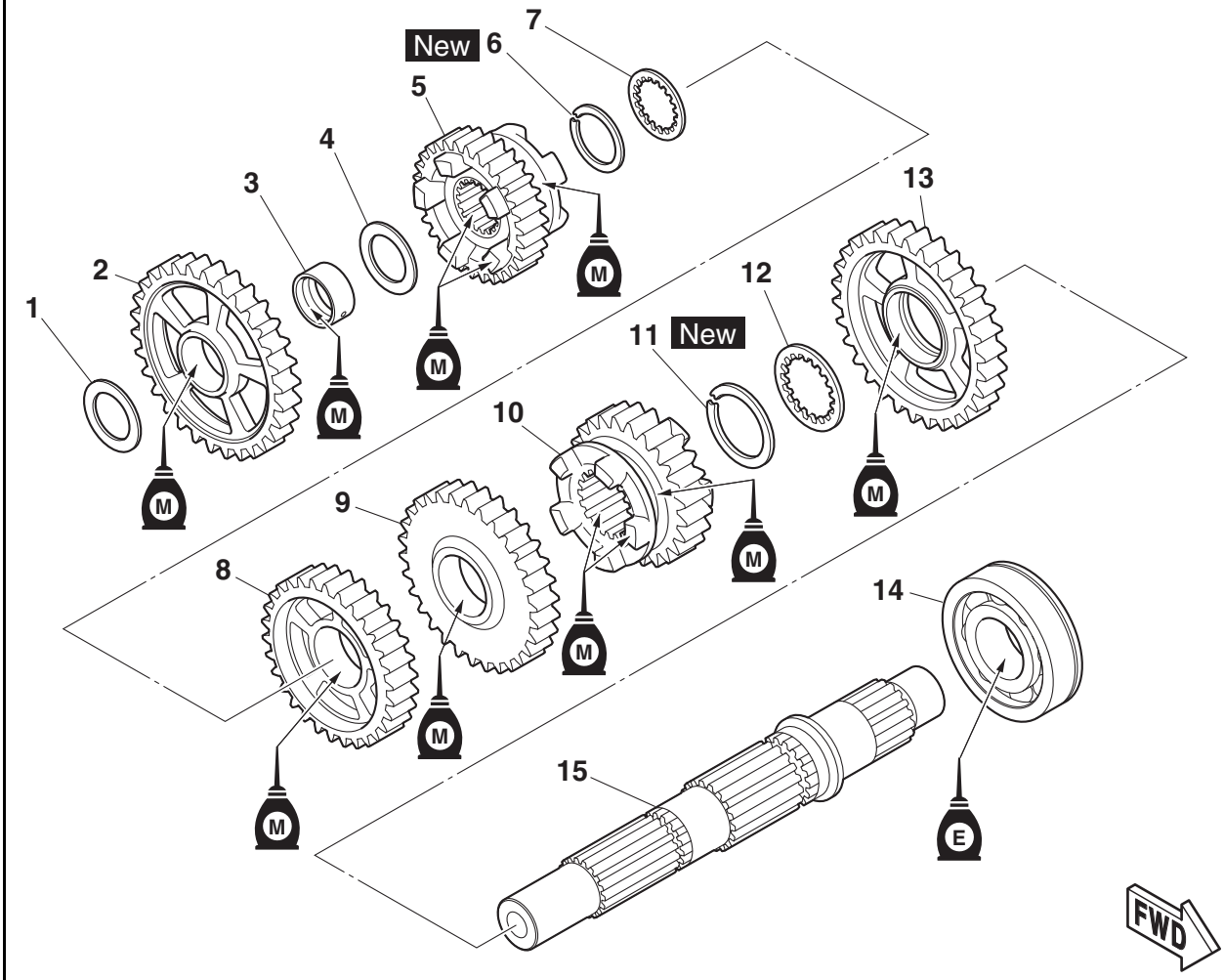

Order	Job/Parts to remove	Q'ty	Remarks
1	Washer	1	
2	1st wheel gear	1	
3	Collar	1	
4	Washer	1	
5	5th wheel gear	1	
6	Circlip	1	
7	Washer	1	
8	4th wheel gear	1	
9	3rd wheel gear	1	
10	6th wheel gear	1	
11	Circlip	1	
12	Washer	1	
13	2nd wheel gear	1	
14	Bearing	1	
15	Drive axle	1	

EAS30431
CHECKING THE SHIFT FORKS

The following procedure applies to all of the shift forks.

1. Check:
   - Shift fork cam follower “1”
   - Shift fork pawl “2”
     Bends/damage/scoring/wear → Replace the shift fork.

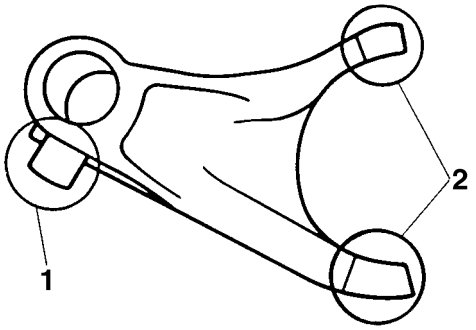

2. Check:
   - Shift fork guide bar
     Roll the shift fork guide bar on a flat surface.
     Bends → Replace.

EWA12840
WARNING

Do not attempt to straighten a bent shift fork guide bar.

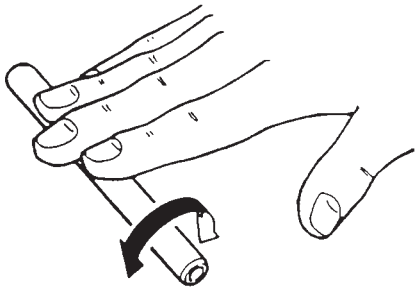

3. Check:
   - Shift fork movement
     (along the shift fork guide bar)
     Rough movement → Replace the shift forks and shift fork guide bar as a set.

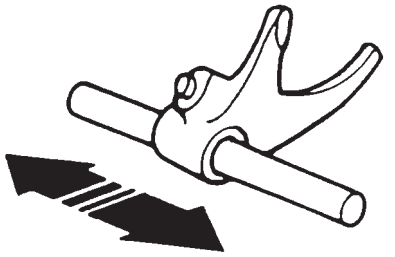

EAS30432
CHECKING THE SHIFT DRUM ASSEMBLY

1. Check:
   - Shift drum groove
     Damage/scratches/wear → Replace the shift drum assembly.
   - Shift drum segment “1”
     Damage/wear → Replace the shift drum assembly.
   - Shift drum bearing “2”
     Damage/pitting → Replace the shift drum assembly.

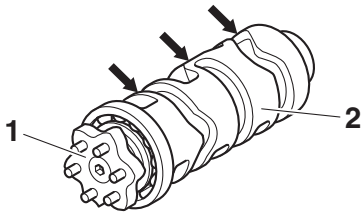

EAS30433
CHECKING THE TRANSMISSION

1. Measure:
   - Main axle runout
     (with a centering device and dial gauge “1”)
     Out of specification → Replace the main axle.

	Main axle runout limit **0.08 mm (0.0032 in)**

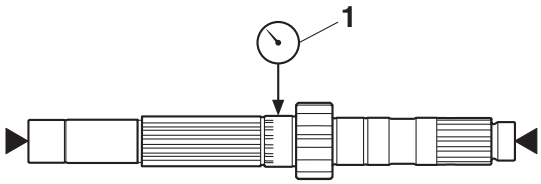

2. Measure:
   - Drive axle runout
     (with a centering device and dial gauge “1”)
     Out of specification → Replace the drive axle.

	Drive axle runout limit **0.08 mm (0.0032 in)**

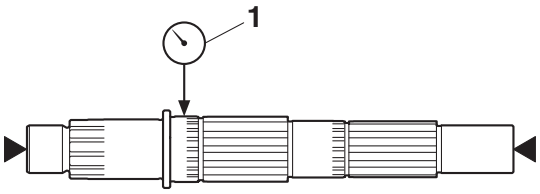

3. Check:
   - Transmission gears
     Blue discoloration/pitting/wear → Replace the defective gear(s).
   - Transmission gear dogs
     Cracks/damage/rounded edges → Replace the defective gear(s).

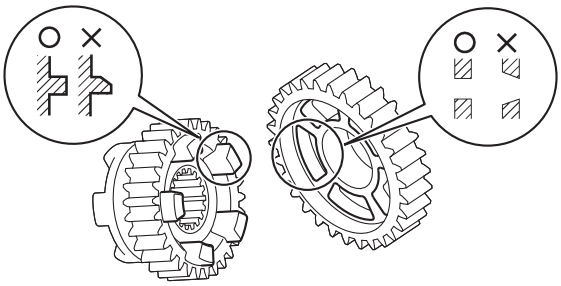

4. Check:
   - Transmission gear engagement
     (each pinion gear to its respective wheel gear)
     Incorrect → Reassemble the transmission axle assemblies.
5. Check:
   - Transmission gear movement
     Rough movement → Replace the defective part(s).

EAS30435

ASSEMBLING THE MAIN AXLE AND DRIVE AXLE

1. Install:
   - 2nd pinion gear “1”

TIP

Press the 2nd pinion gear onto the main axle until the press-fitting height “a” is 122.1–122.3 mm (4.80–4.81 in) as shown in the illustration.

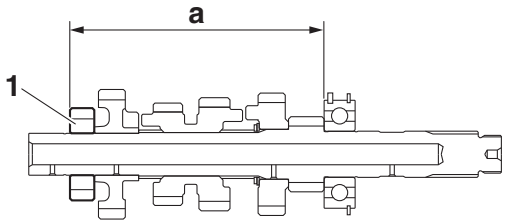

2. Install:
   - Circlip “1” New

TIP

Align the opening between the ends “a” of the circlip with a groove “b” in the axle.

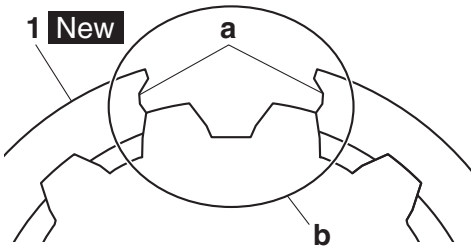

EAS30438

INSTALLING THE TRANSMISSION

1. Install:
   - Oil pump idle gear shaft “1”

TIP

Install the oil pump idle gear shaft until its flange “a” contacts the lower crankcase.

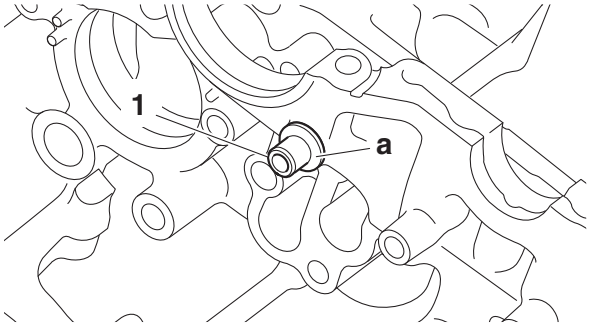

2. Install:
   - Shift drum assembly
   - Shift fork “C”
   - Shift fork “R”
   - Shift fork “L”
   - Springs
   - Shift fork guide bars
   - Shift fork guide bar retainer 2 “1”
   - Shift fork guide bar retainer 1 “2”

Shift fork guide bar retainer bolt
10 Nm (1.0 m·kgf, 7.2 ft·lbf)
LOCTITE®

TIP

- The embossed marks on the shift forks should face towards the right side of the engine.
- Install the shift fork guide bar retainers with the "OUT" marks "a" facing outward.

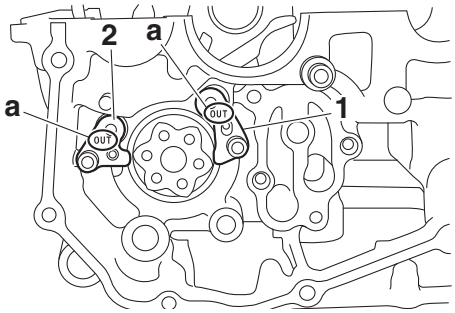

3. Install:
   - Main axle clip "1"
   - Drive axle clip "2"
   - Main axle assembly "3"
   - Drive axle assembly "4"

TIP

- Make sure that the main axle clip and drive axle clip are installed onto the bearing so that the clips overlap both the upper crankcase and lower crankcase as shown in the illustration.
- Install the drive axle clip at bearing pin "a" side.
- Make sure that the ends of the clips are positioned within the range shown in the illustration.
- Install shift fork "C" "5" into the groove in the 3rd pinion gear on the main axle.
- Install shift fork "L" "6" into the groove in the 6th wheel gear and shift fork "R" "7" into the groove in the 5th wheel gear on the drive axle.

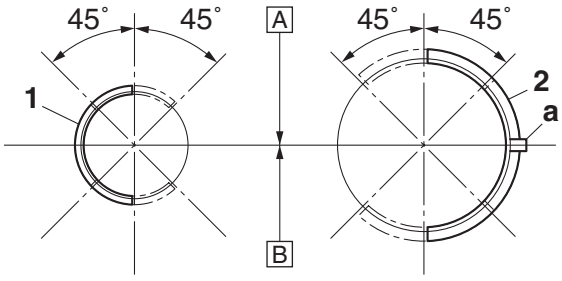

A. Upper crankcase
B. Lower crankcase
a. Bearing pin

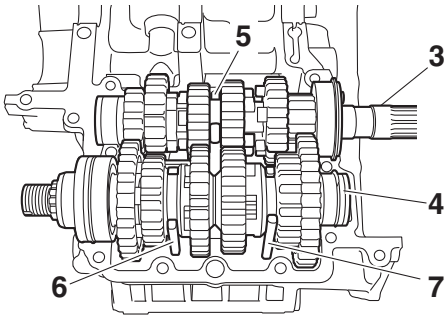

4. Check:
   - Transmission
     Rough movement → Repair.

TIP

Oil each gear, shaft, and bearing thoroughly.

COOLING SYSTEM

RADIATOR 6-1
CHECKING THE RADIATOR 6-3
INSTALLING THE RADIATOR 6-3

THERMOSTAT 6-5
CHECKING THE THERMOSTAT 6-6
INSTALLING THE THERMOSTAT 6-6

WATER PUMP 6-7
DISASSEMBLING THE WATER PUMP 6-9
CHECKING THE WATER PUMP 6-9
ASSEMBLING THE WATER PUMP 6-9
INSTALLING THE CLUTCH COVER 6-10

EAS20063

RADIATOR

Removing the radiator

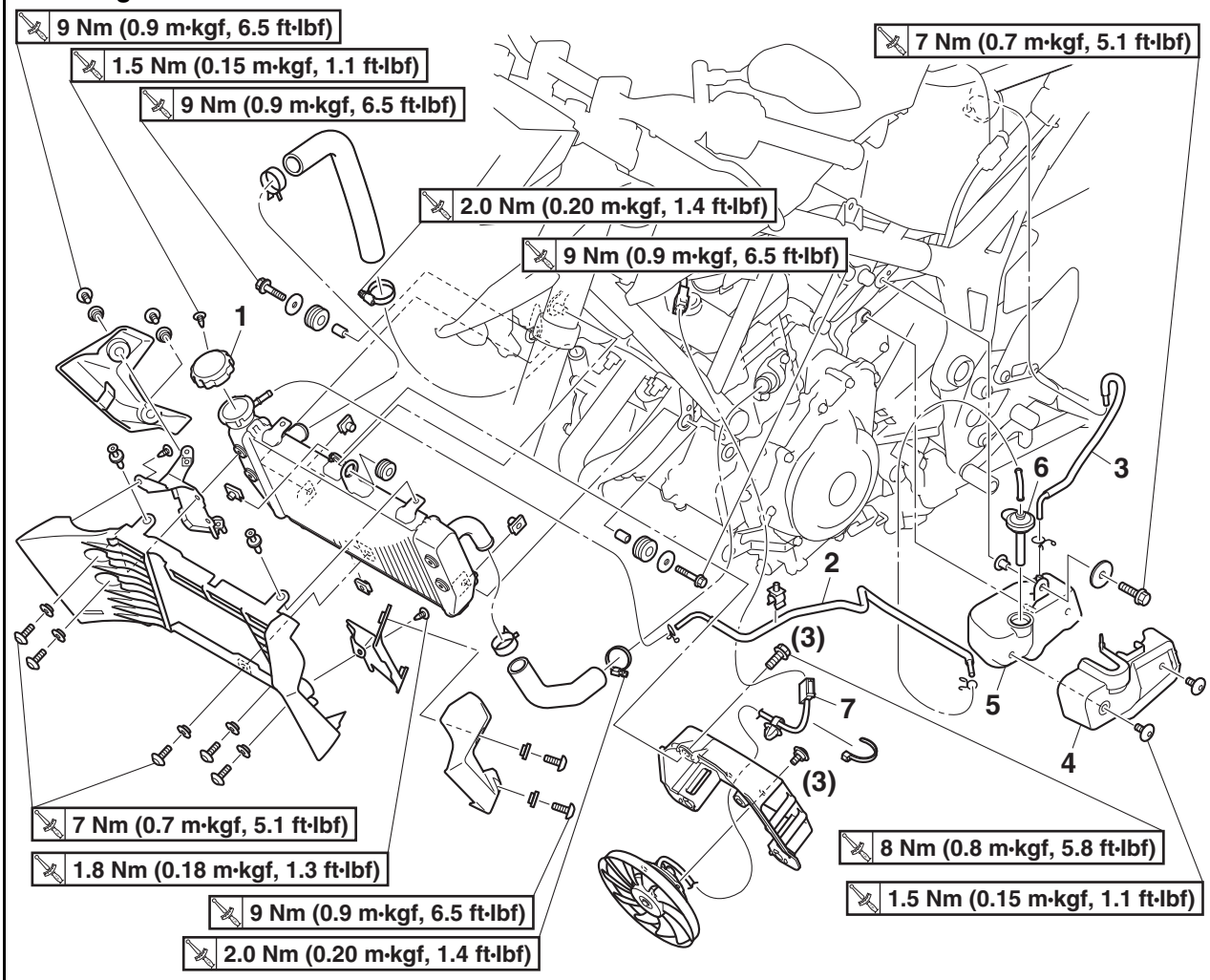

Order	Job/Parts to remove	Q'ty	Remarks
	Rider seat		Refer to "GENERAL CHASSIS (1)" on page 4-1.
	Side panel assemblies		Refer to "GENERAL CHASSIS (2)" on page 4-3.
	Air scoop/Bottom cowling		Refer to "GENERAL CHASSIS (3)" on page 4-8.
	Coolant		Drain. Refer to "CHANGING THE COOLANT" on page 3-24.
1	Radiator cap	1	
2	Coolant reservoir hose	1	
3	Coolant reservoir breather hose	1	
4	Coolant reservoir cover	1	
5	Coolant reservoir	1	
6	Coolant reservoir cap	1	
7	Radiator fan motor coupler	1	Disconnect.

Removing the radiator

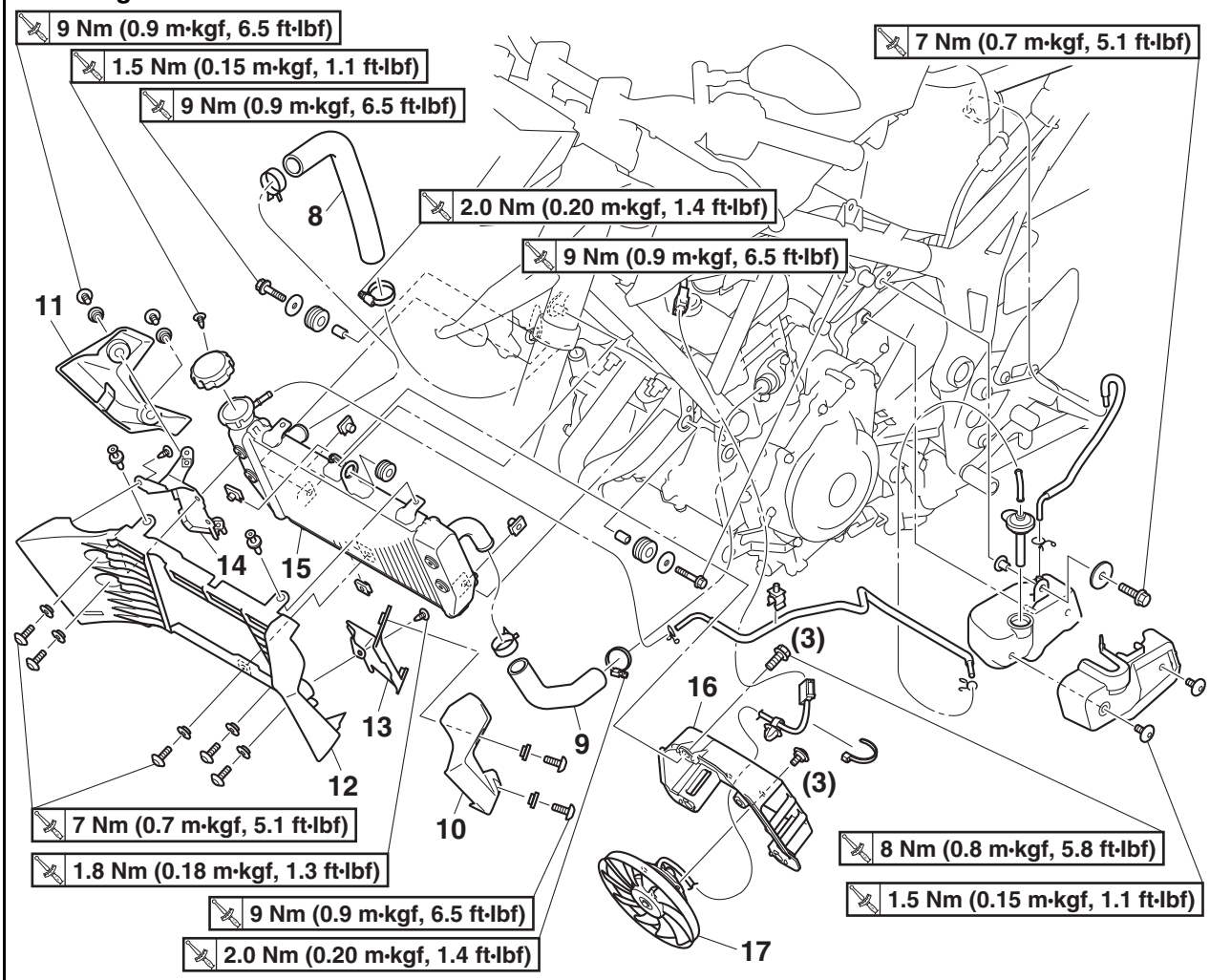

Order	Job/Parts to remove	Q'ty	Remarks
8	Radiator outlet hose	1	
9	Radiator inlet hose	1	
10	Radiator side cover (left)	1	
11	Radiator side cover (right)	1	
12	Radiator cover	1	
13	Radiator side cover bracket (left)	1	
14	Radiator side cover bracket (right)	1	
15	Radiator	1	
16	Radiator fan cover	1	
17	Radiator fan	1	

EAS30439
CHECKING THE RADIATOR

1. Check:
   - Radiator fins
     Obstruction → Clean.
     Apply compressed air to the rear of the radiator.
     Damage → Repair or replace.

TIP

Straighten any flattened fins with a thin, flat-head screwdriver.

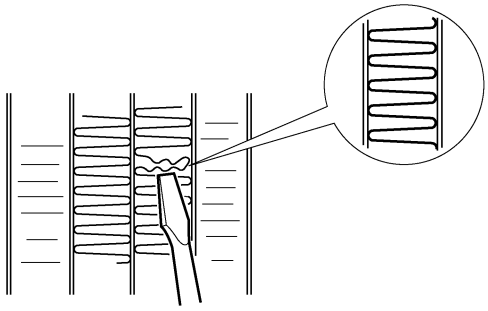

2. Check:
   - Radiator hoses
     Cracks/damage → Replace.
   - Radiator pipes
     Cracks/damage → Replace the radiator.
3. Measure:
   - Radiator cap opening pressure
     Below the specified pressure → Replace the radiator cap.

Radiator cap valve opening pressure
93.2–122.6 kPa (0.93–1.23 kgf/cm², 13.5–17.8 psi)

▼▼▼▼▼▼▼▼▼▼▼▼▼▼▼▼▼▼▼▼▼▼▼▼▼▼▼▼▼▼▼▼▼▼

a. Install the radiator cap tester “1” and radiator cap tester adapter “2” to the radiator cap “3”.

Radiator cap tester
90890-01325
Mityvac cooling system tester kit
YU-24460-A
Radiator cap tester adapter
90890-01352
Pressure tester adapter
YU-33984

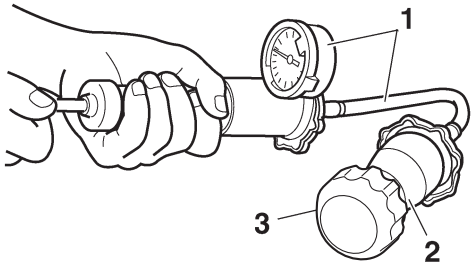

b. Apply the specified pressure for ten seconds and make sure there is no drop in pressure.

▲▲▲▲▲▲▲▲▲▲▲▲▲▲▲▲▲▲▲▲▲▲▲▲▲▲▲▲▲▲▲▲▲▲

4. Check:
   - Radiator fan
     Damage/malfunction → Replace.
     Refer to “COOLING SYSTEM” on page 8-29.

EAS30440
INSTALLING THE RADIATOR

1. Install:
   - Spring nuts “1” (to the radiator)

TIP

- Install the spring nuts to the radiator with its projection “a” facing inward.
- Install the spring nut with its projection “b” facing toward the radiator fan.

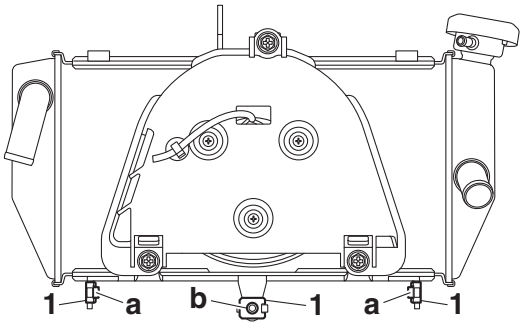

2. Install:
   - Radiator side cover bracket “1” (to the radiator cover “2”)

Radiator side cover bracket screw
1.8 Nm (0.18 m·kgf, 1.3 ft·lbf)

TIP

- Fit the portion “a” of the radiator side cover bracket into the hole “b” in the radiator cover.
- Align the hole “c” in the radiator side cover bracket with the projection “d” on the radiator cover.

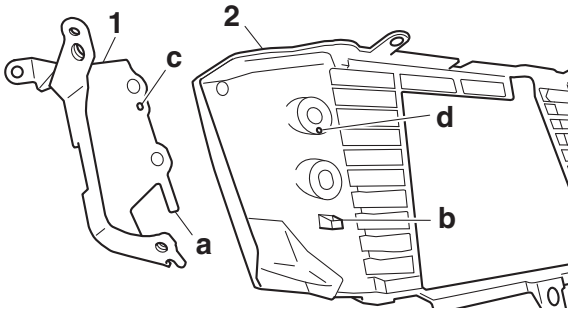

3. Install
   - Radiator side cover “1”

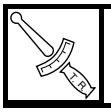	**Radiator side cover bolt** **9 Nm (0.9 m·kgf, 6.5 ft·lbf)**

TIP

- Align the projection “a” on the radiator side cover with the hole “b” in the radiator side cover bracket.
- Align the projection “c” on the radiator side cover with the slot “d” in the radiator side cover bracket.

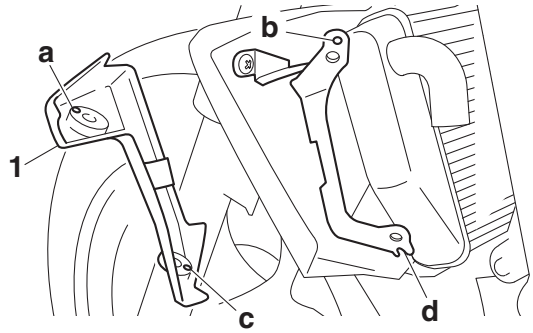

4. Fill:
   - Cooling system
     (with the specified amount of the recommended coolant)
     Refer to “CHANGING THE COOLANT” on page 3-24.
5. Check:
   - Cooling system
     Leaks → Repair or replace any faulty part.
6. Measure:
   - Radiator cap opening pressure
     Below the specified pressure → Replace the radiator cap.
     Refer to “CHECKING THE RADIATOR” on page 6-3.

EAS20065

THERMOSTAT

Removing the thermostat

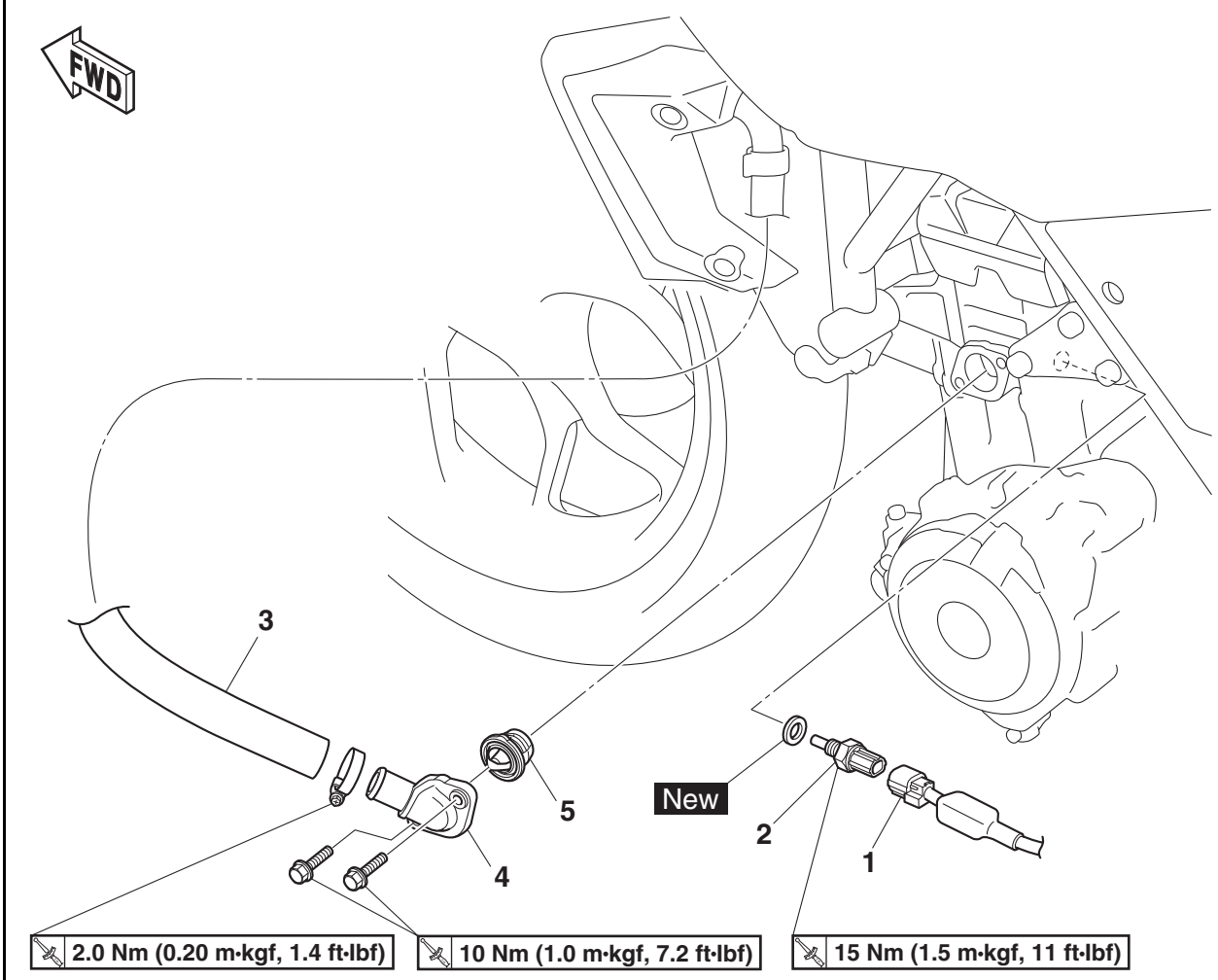

Order	Job/Parts to remove	Q'ty	Remarks
	Bottom cowling		Refer to "GENERAL CHASSIS (3)" on page 4-8.
	Coolant		Drain. Refer to "CHANGING THE COOLANT" on page 3-24.
	Coolant reservoir		Refer to "RADIATOR" on page 6-1.
1	Coolant temperature sensor coupler	1	Disconnect.
2	Coolant temperature sensor	1	
3	Radiator inlet hose	1	Disconnect.
4	Thermostat cover	1	
5	Thermostat	1	

EAS30443
CHECKING THE THERMOSTAT

1. Check:
   - Thermostat
     Does not open at 80.5–83.5 °C (176.90–182.30 °F) → Replace.

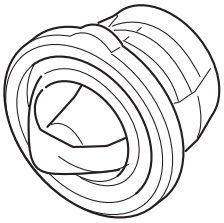

▼▼▼▼▼▼▼▼▼▼▼▼▼▼▼▼▼▼▼▼▼▼▼▼▼▼▼▼▼▼▼▼▼▼▼▼▼▼

a. Suspend the thermostat "1" in a container "2" filled with water.
b. Slowly heat the water "3".
c. Place a thermometer "4" in the water.
d. While stirring the water, observe the thermostat and thermometer's indicated temperature.

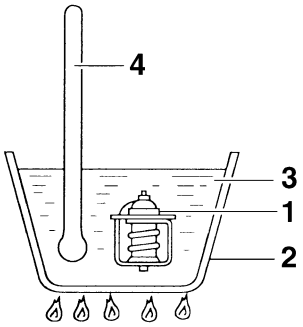

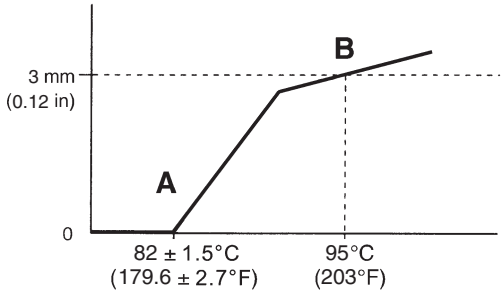

A. Fully closed
B. Fully open

TIP

If the accuracy of the thermostat is in doubt, replace it. A faulty thermostat could cause serious overheating or overcooling.

▲▲▲▲▲▲▲▲▲▲▲▲▲▲▲▲▲▲▲▲▲▲▲▲▲▲▲▲▲▲▲▲▲▲▲▲▲▲

2. Check:
   - Thermostat cover
     Cracks/damage → Replace.

EAS30939
INSTALLING THE THERMOSTAT

1. Install:
   - Thermostat "1" (to the thermostat cover)
   - Thermostat cover "2"

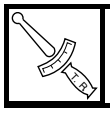	**Thermostat cover bolt** **10 Nm (1.0 m·kgf, 7.2 ft·lbf)**

TIP

- Align the breather hole "a" in the thermostat "1" with the tab "b" on the thermostat gasket "3".
- Align the slot "c" in the thermostat cover with the tab "b" on the thermostat gasket.

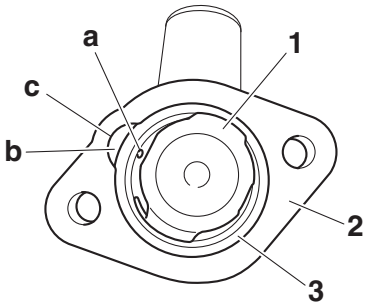

2. Fill:
   - Cooling system
     (with the specified amount of the recommended coolant)
     Refer to "CHANGING THE COOLANT" on page 3-24.
3. Check:
   - Cooling system
     Leaks → Repair or replace any faulty part.
4. Measure:
   - Radiator cap opening pressure
     Below the specified pressure → Replace the radiator cap.
     Refer to "CHECKING THE RADIATOR" on page 6-3.

EAS20066

WATER PUMP

Removing the water pump

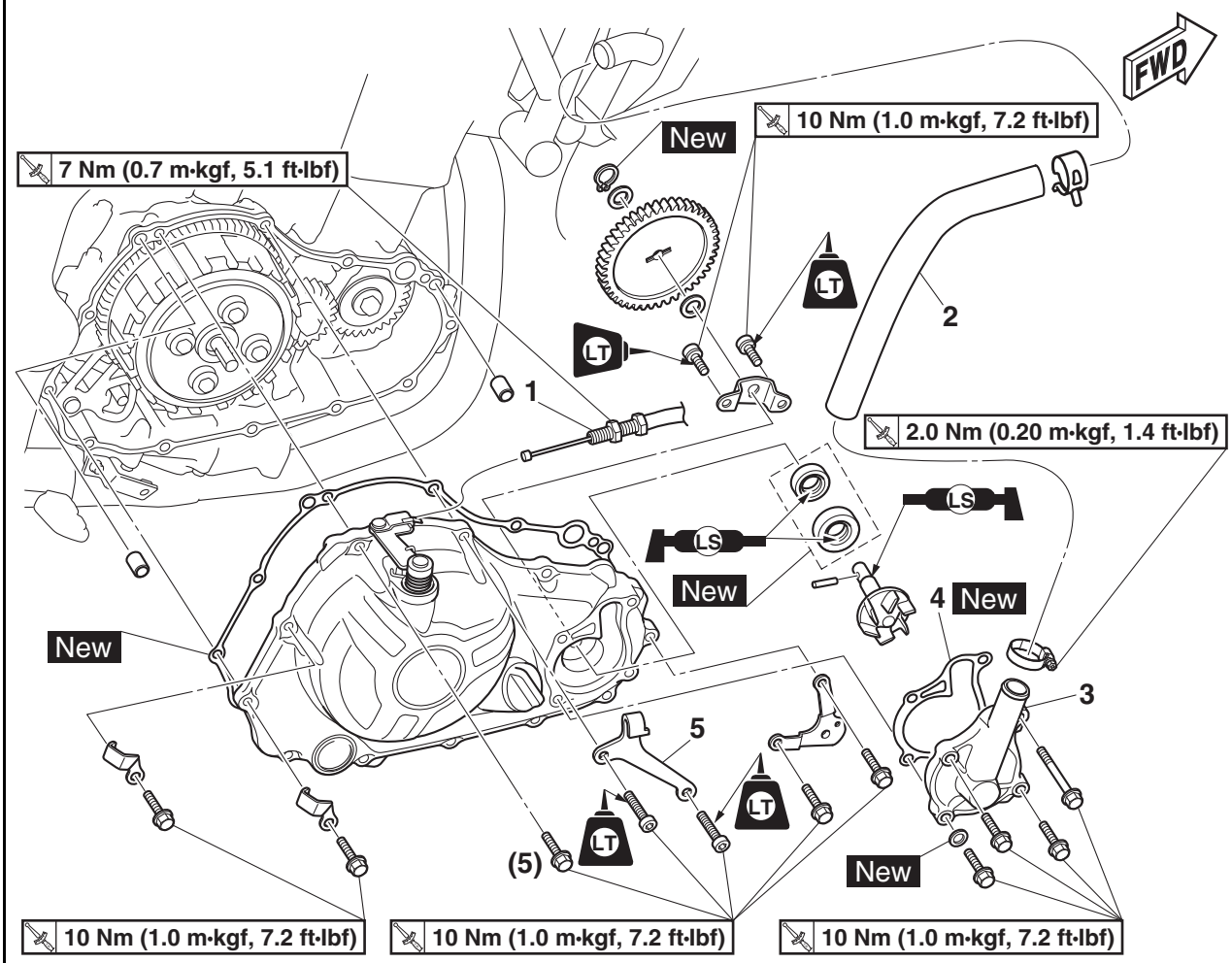

Order	Job/Parts to remove	Q'ty	Remarks
	Bottom cowling		Refer to "GENERAL CHASSIS (3)" on page 4-8.
	Engine oil		Drain. Refer to "CHANGING THE ENGINE OIL" on page 3-22.
	Coolant		Drain. Refer to "CHANGING THE COOLANT" on page 3-24.
1	Clutch cable	1	Disconnect.
2	Radiator outlet hose	1	
3	Water pump housing	1	
4	Water pump housing gasket	1	
5	Clutch cable holder	1	

Removing the water pump

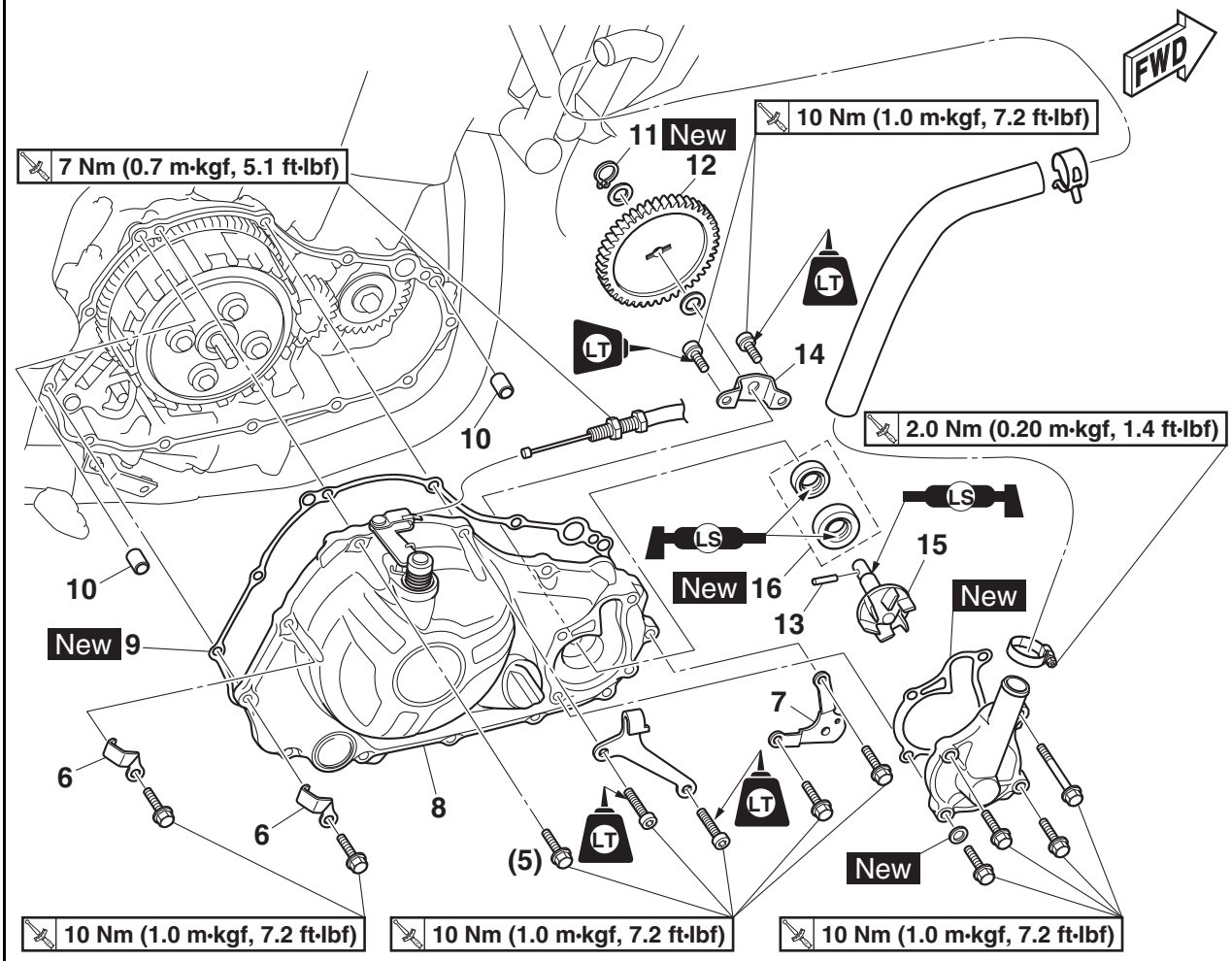

Order	Job/Parts to remove	Q'ty	Remarks
6	Holder (O_2 sensor lead)	2	
7	Bottom cowling bracket (front right)	1	
8	Clutch cover	1	
9	Clutch cover gasket	1	
10	Dowel pin	2	
11	Circlip	1	
12	Water pump driven gear	1	
13	Pin	1	
14	Impeller shaft retaining plate	1	
15	Impeller shaft	1	
16	Mechanical seal assembly	1	

EAS30446
DISASSEMBLING THE WATER PUMP
1. Remove:
   - Mechanical seal assembly “1”

TIP

Remove the mechanical seal assembly from the inside of the clutch cover “2”.

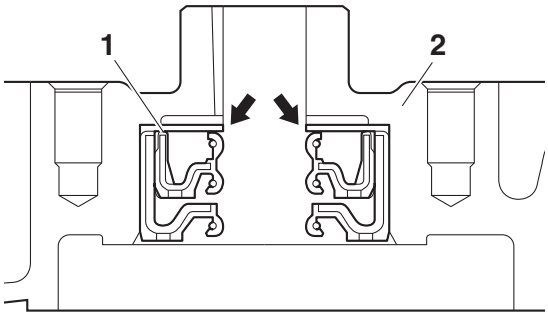

EAS30447
CHECKING THE WATER PUMP
1. Check:
   - Water pump housing
   - Clutch cover
   - Impeller shaft
     Cracks/damage/wear → Replace.
2. Check:
   - Radiator outlet hose
     Cracks/damage → Replace.

EAS30448
ASSEMBLING THE WATER PUMP
1. Install:
   - Mechanical seal assembly “1” New
     (into the clutch cover “2”)

TIP

Install the mechanical seal assembly with the special tools to the specified depth as shown in the illustration.

Install depth “a”
0.2–0.7 mm (0.01–0.03 mm)

Mechanical seal installer
90890-04145
Middle driven shaft bearing driver
90890-04058
Middle drive bearing installer 40 & 50 mm
YM-04058

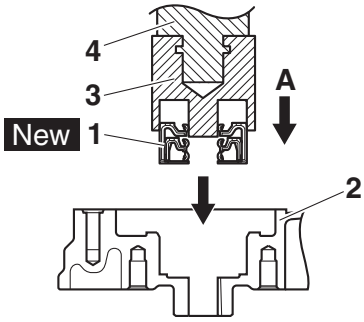

3. Mechanical seal installer
4. Middle driven shaft bearing driver

A. Push down

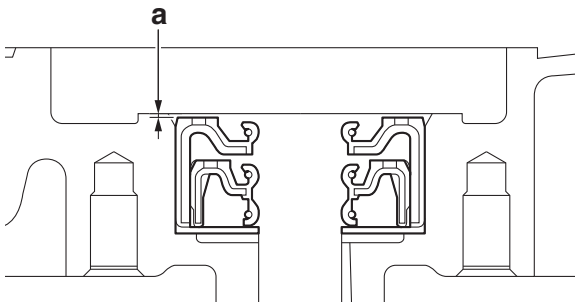

2. Install:
   - Impeller shaft “1”
   - Impeller shaft retaining plate “2”
   - Washer “3”
   - Pin “4”
   - Water pump driven gear “5”
   - Washer “6”
   - Circlip “7” New

TIP

- After installing the impeller shaft, inject a small amount of molybdenum disulfide oil into the hole “a” in the clutch cover.
- After installation, check that the impeller shaft rotates smoothly.

Impeller shaft retaining plate bolt
10 Nm (1.0 m·kgf, 7.2 ft·lbf)
LOCTITE®

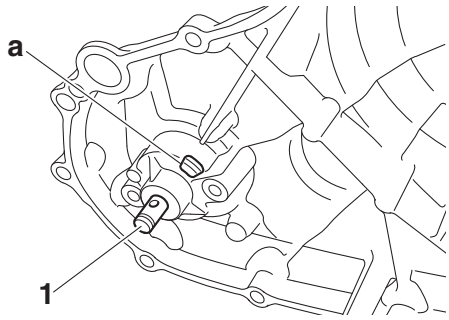

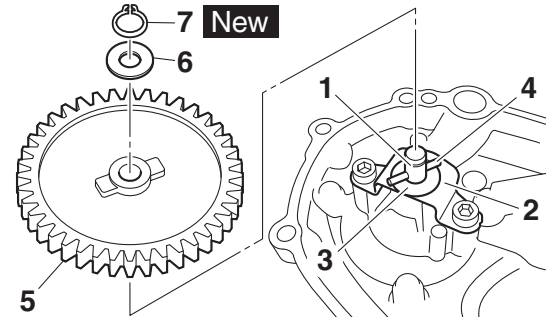

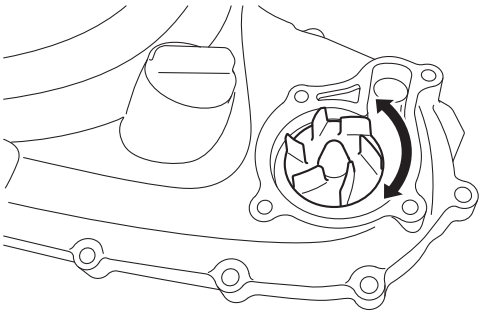

EAS31117

INSTALLING THE CLUTCH COVER

1. Install:
   - Dowel pins “1”
   - Clutch cover gasket “2” New
   - Clutch cover “3”
   - Bottom cowling bracket (front right)
   - O_2 sensor lead holder
   - Clutch cable holder “4”

	Clutch cover bolt **10 Nm (1.0 m·kgf, 7.2 ft·lbf)** **Clutch cable holder bolt** **10 Nm (1.0 m·kgf, 7.2 ft·lbf)** **LOCTITE®**

TIP

- Face the serrations on the clutch pull rod “5” rearward and align the rod with the hole “a” in the clutch cover.
- Apply looking agent (LOCTITE®) to the threads of only the clutch cable holder bolts “6”.
- Tighten the bolts in stages and in a crisscross pattern.
- After installing the clutch cover, make sure that the alignment mark “b” on the clutch cover is aligned with the punch mark “c” on the pull lever “7”.

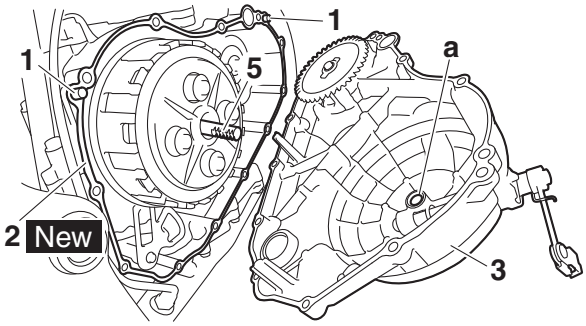

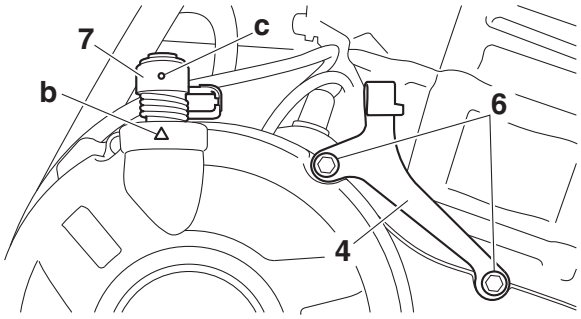

2. Connect:
   - Clutch cable “1”

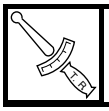	**Clutch cable locknut** **7 Nm (0.7 m·kgf, 5.1 ft·lbf)**

TIP

- Install the clutch cable so that the clutch cable length “a” is 54.9–65.0 mm (2.16–2.56 in) as shown in the illustration.
- After installing the clutch cable, bend the projection “b” on the pull lever as shown in the illustration.

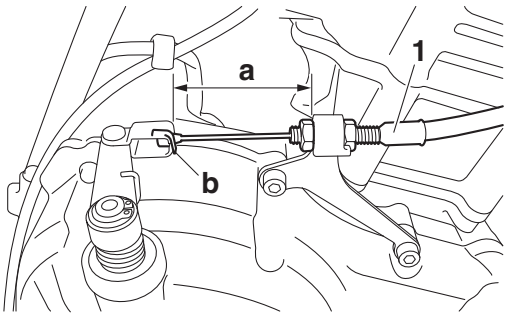

3. Adjust:
   - Clutch lever free play
     Refer to “ADJUSTING THE CLUTCH LEVER FREE PLAY” on page 3-12.

	Clutch lever free play **10.0–15.0 mm (0.39–0.59 in)**

4. Fill:
   - Cooling system
     (with the specified amount of the recommended coolant)
     Refer to “CHANGING THE COOLANT” on page 3-24.
5. Check:
   - Cooling system
     Leaks → Repair or replace the faulty part.
6. Measure:
   - Radiator cap opening pressure
     Below the specified pressure → Replace the radiator cap.
     Refer to “CHECKING THE RADIATOR” on page 6-3.

FUEL SYSTEM

FUEL TANK 7-1
REMOVING THE FUEL TANK 7-3
REMOVING THE FUEL PUMP 7-3
CHECKING THE FUEL PUMP BODY 7-3
INSTALLING THE FUEL PUMP 7-3
INSTALLING THE FUEL TANK 7-4

THROTTLE BODIES 7-5
CHECKING THE INJECTORS (BEFORE REMOVING) 7-8
REMOVING THE INJECTORS 7-8
CHECKING THE INJECTORS 7-8
CHECKING THE THROTTLE BODIES 7-8
CHECKING THE THROTTLE BODIES AND ISC (IDLE SPEED CONTROL) UNIT 7-8
CHECKING THE THROTTLE BODY JOINT 7-11
INSTALLING THE FUEL INJECTORS 7-11
CHECKING THE INJECTOR PRESSURE 7-11
CHECKING THE FUEL PRESSURE 7-12
INSTALLING THE THROTTLE BODY JOINT 7-12
REPLACING THE THROTTLE BODIES 7-13

AIR INDUCTION SYSTEM 7-15
CHECKING THE AIR INDUCTION SYSTEM 7-18
INSTALLING THE AIR INDUCTION SYSTEM 7-18

EAS20067

FUEL TANK

Removing the fuel tank and fuel pump

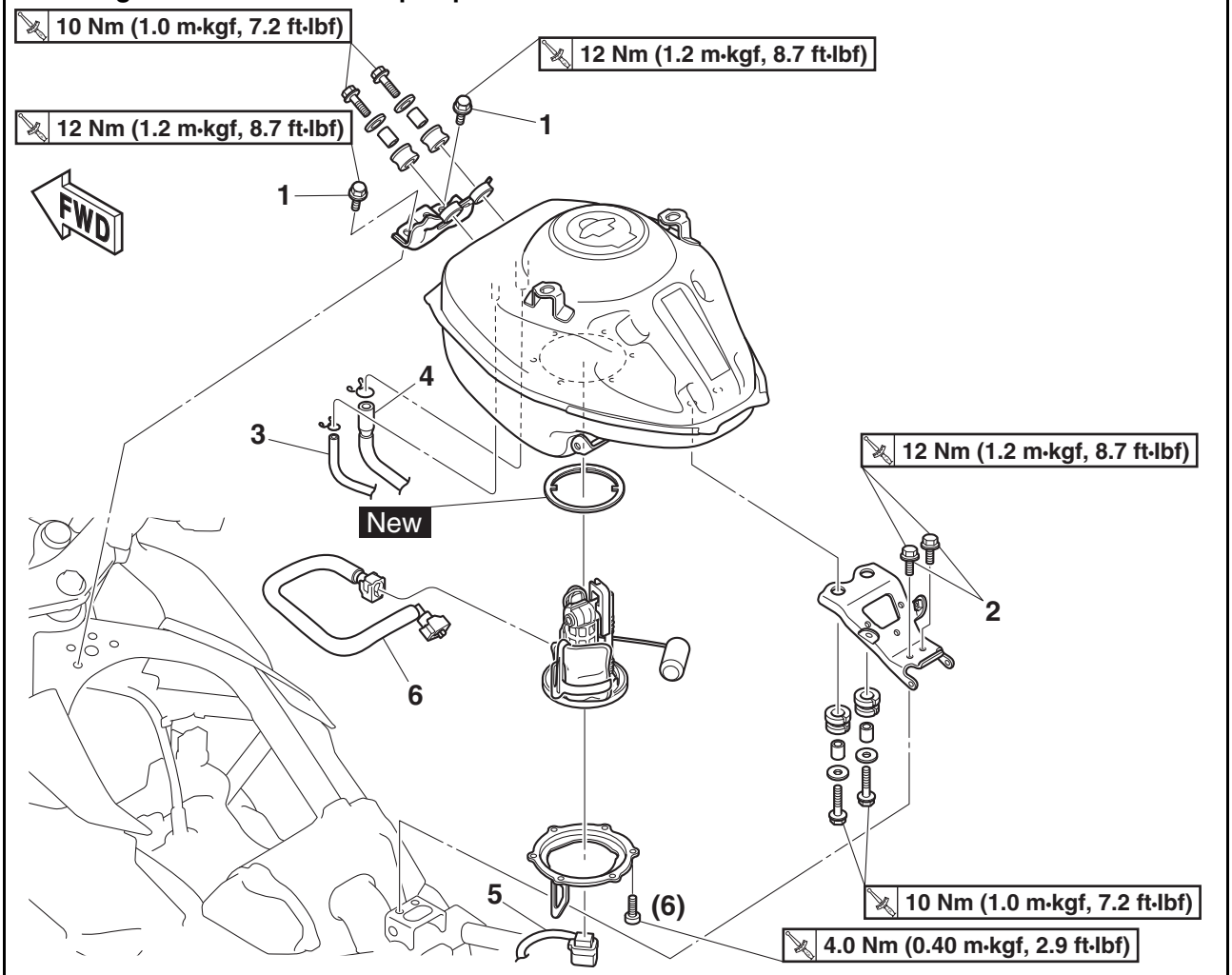

Order	Job/Parts to remove	Q'ty	Remarks
	Rider seat		Refer to "GENERAL CHASSIS (1)" on page 4-1.
	Side panels		Refer to "GENERAL CHASSIS (2)" on page 4-3.
	Fuel tank cover assembly		Refer to "GENERAL CHASSIS (3)" on page 4-8.
1	Front fuel tank bracket bolt (frame)	2	
2	Rear fuel tank bracket bolt (frame)	2	
3	Fuel tank breather hose	1	
4	Fuel tank overflow hose	1	
5	Fuel pump coupler	1	Disconnect.
6	Fuel hose	1	

Removing the fuel tank and fuel pump

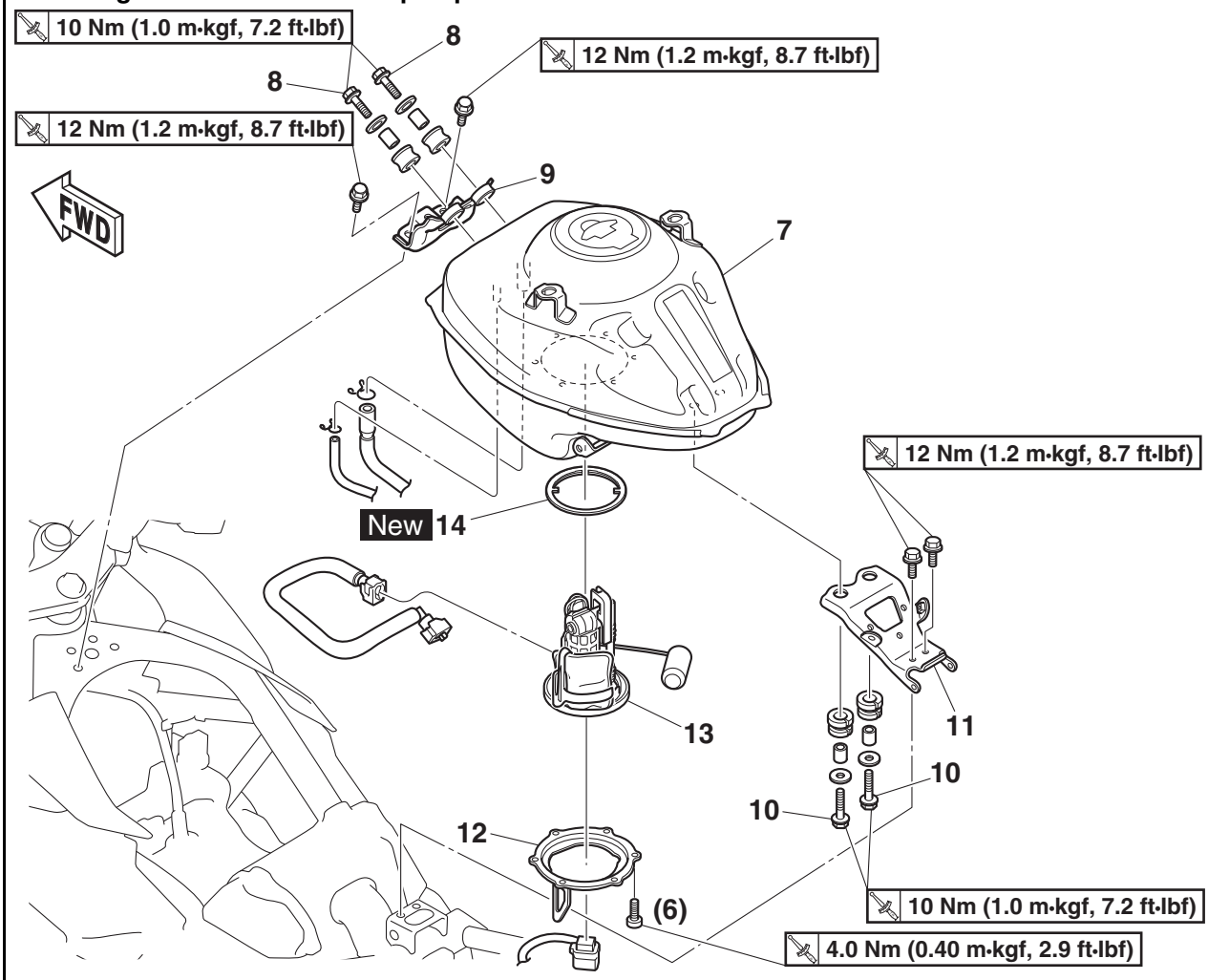

Order	Job/Parts to remove	Q'ty	Remarks
7	Fuel tank	1	
8	Front fuel tank bracket bolt (fuel tank)	2	
9	Front fuel tank bracket	1	
10	Rear fuel tank bracket bolt (fuel tank)	2	
11	Rear fuel tank bracket	1	
12	Fuel pump bracket	1	
13	Fuel pump assembly	1	
14	Fuel pump gasket	1	

EAS30450
REMOVING THE FUEL TANK
1. Extract the fuel in the fuel tank through the fuel tank cap with a pump.
2. Remove:
   - Fuel hose

EWA17320
WARNING

Cover fuel hose connections with a cloth when disconnecting them. Residual pressure in the fuel lines could cause fuel to spurt out when removing the hose.

ECA20020
NOTICE

Although the fuel has been removed from the fuel tank, be careful when removing the fuel hose, since there may be fuel remaining in it.

TIP
- To remove the fuel hose from the fuel rail and fuel pump, slide the fuel hose connector cover “1” on the end of the hose in the direction of the arrow shown, press the two buttons “2” on the sides of the connector, and then remove the hose.
- Remove the fuel hose manually without using any tools.
- Before removing the hose, place a few rags in the area under where it will be removed.

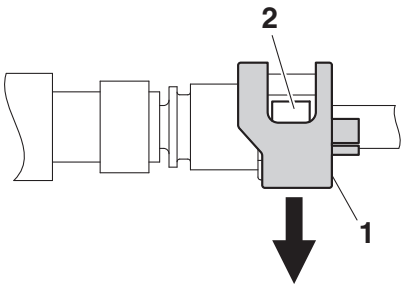

3. Remove:
   - Fuel tank

TIP

Do not set the fuel tank down on the installation surface of the fuel pump. Be sure to lean the fuel tank against a wall or the like.

EAS30451
REMOVING THE FUEL PUMP
1. Remove:
   - Fuel pump

ECA14721
NOTICE

- **Do not drop the fuel pump or give it a strong shock.**
- **Do not touch the base section of the fuel sender.**

EAS30454
CHECKING THE FUEL PUMP BODY
1. Check:
   - Fuel pump body
     Obstruction → Clean.
     Cracks/damage → Replace fuel pump assembly.

EAS30456
INSTALLING THE FUEL PUMP
1. Install:
   - Fuel pump gasket “1” New
   - Fuel pump “2”
   - Fuel pump bracket

Fuel pump bolt
4.0 Nm (0.40 m·kgf, 2.9 ft·lbf)

TIP
- Do not damage the installation surfaces of the fuel tank when installing the fuel pump.
- Always use a new fuel pump gasket.
- When installing the fuel pump gasket, make sure that there is no foreign material between the gasket and the surrounding parts.
- The gasket lip “a” shall face toward the fuel pump.
- Align the projections “b” (three locations) on the fuel pump gasket with the slots “c” in the fuel pump.
- Align the projection “e” on the fuel pump with the punch mark “d” on the fuel tank.
- Align the slot in the fuel pump bracket with the projection “e” on the fuel pump.
- Tighten the fuel pump bolts in the proper tightening sequence as shown.

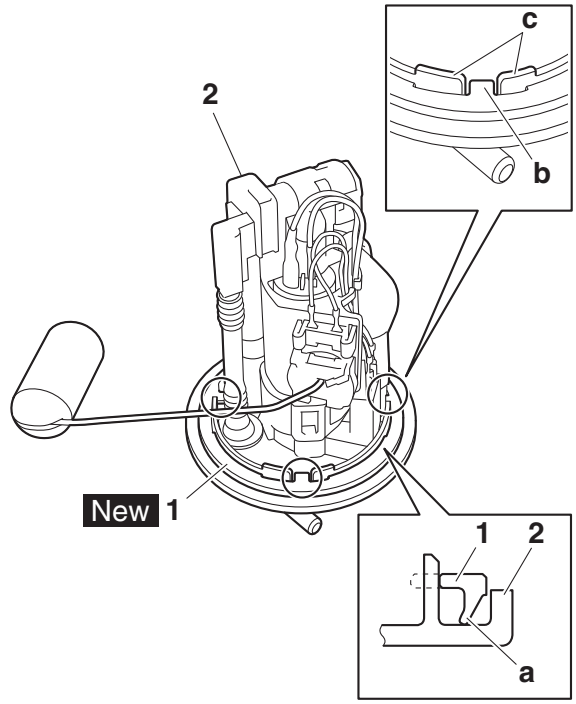

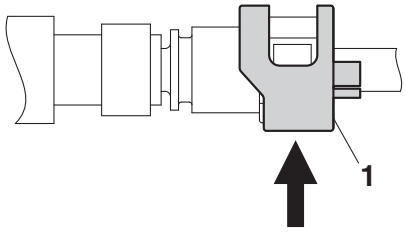

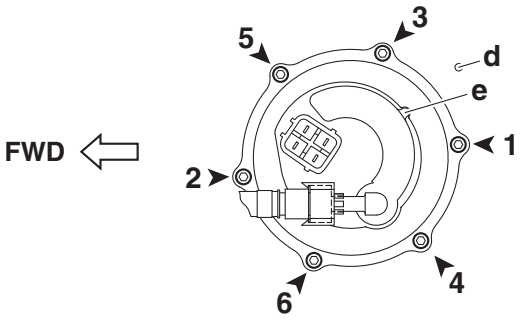

EAS30457

INSTALLING THE FUEL TANK

1. Install:
   - Fuel hose

ECA18420

NOTICE

When installing the fuel hose, make sure that it is securely connected, and that the fuel hose connector cover on the fuel hose is in the correct position; otherwise, the fuel hose will not be properly installed.

TIP

- Install the fuel hose securely onto the fuel rail and fuel pump until a distinct “click” is heard.
- To install the fuel hose, slide the fuel hose connector cover “1” on each end of the hose in the direction of the arrow shown.

EAS20070

THROTTLE BODIES

Removing the throttle bodies

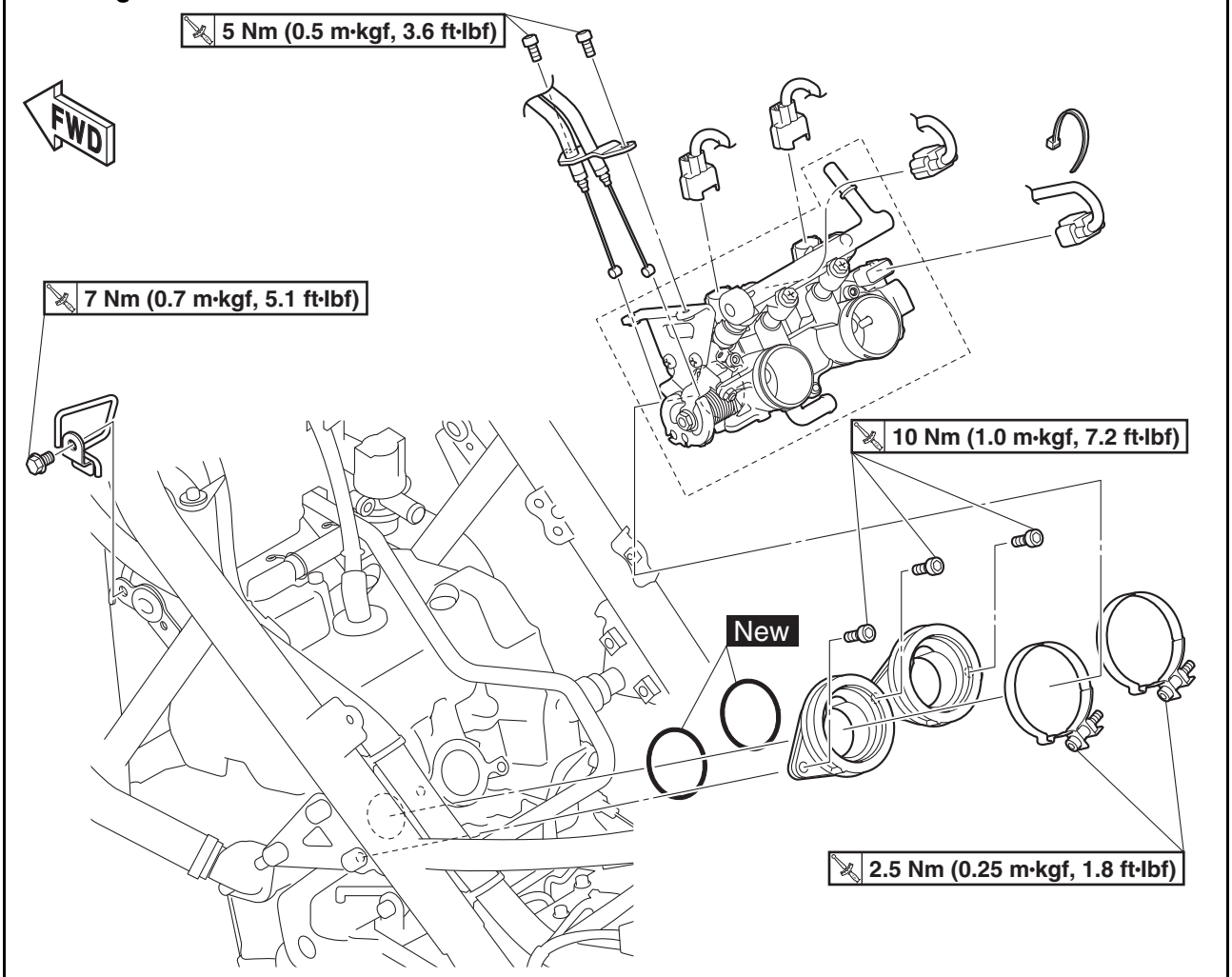

Order	Job/Parts to remove	Q'ty	Remarks
	Rider seat		Refer to "GENERAL CHASSIS (1)" on page 4-1.
	Side panel assemblies		Refer to "GENERAL CHASSIS (2)" on page 4-3.
	Fuel tank cover assembly		Refer to "GENERAL CHASSIS (3)" on page 4-8.
	Fuel tank		Refer to "FUEL TANK" on page 7-1.
	Air filter case		Refer to "GENERAL CHASSIS (5)" on page 4-15.

Removing the throttle bodies

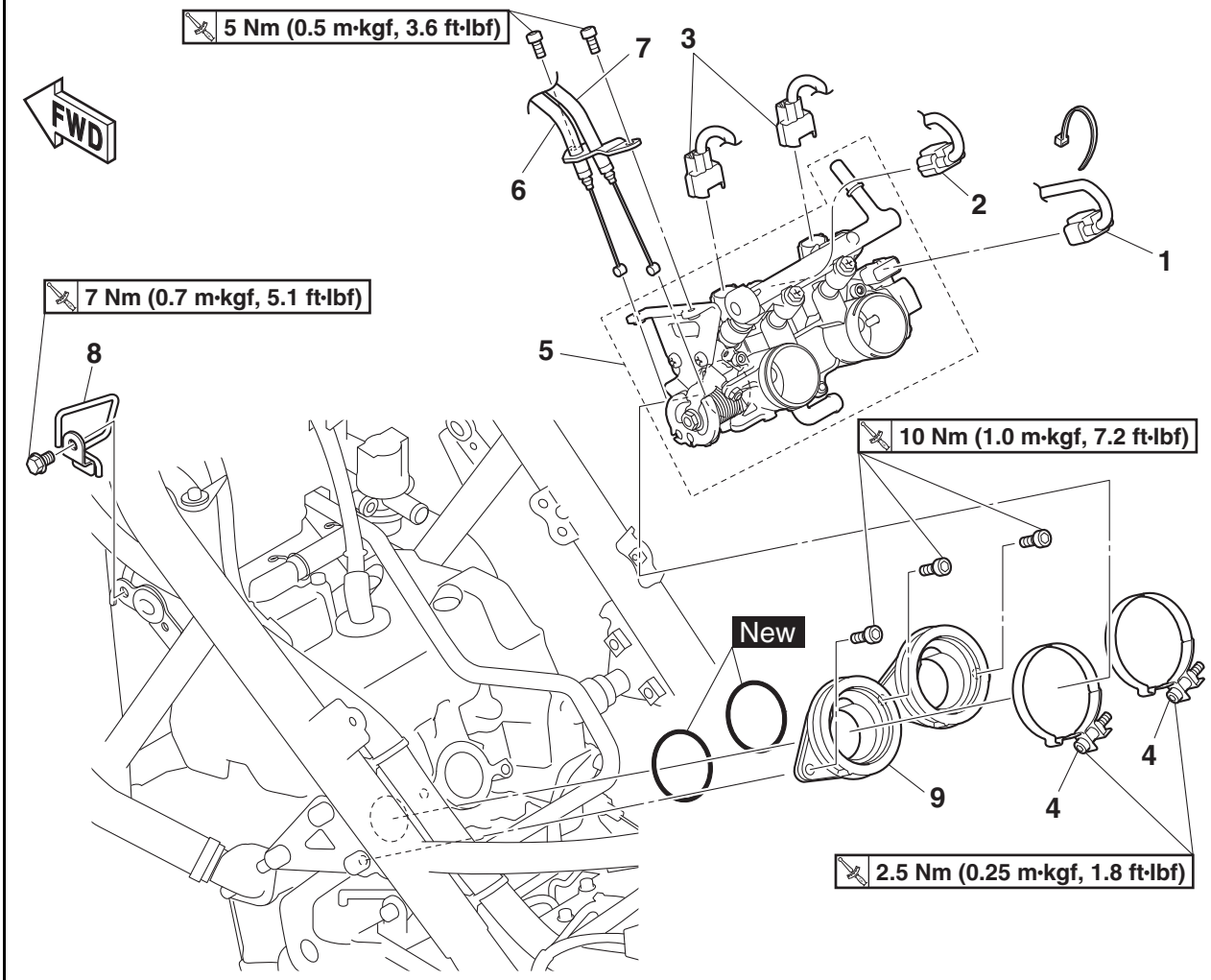

Order	Job/Parts to remove	Q'ty	Remarks
1	Throttle body sensor assembly coupler	1	Disconnect.
2	ISC (Idle Speed Control) unit coupler	1	Disconnect.
3	Injector coupler	2	Disconnect.
4	Throttle body joint clamp screw	2	Loosen.
5	Throttle bodies	1	
6	Throttle cable (decelerator cable)	1	Disconnect.
7	Throttle cable (accelerator cable)	1	Disconnect.
8	Throttle cable holder	1	
9	Throttle body joint	1	

Removing the fuel injectors and ISC valve

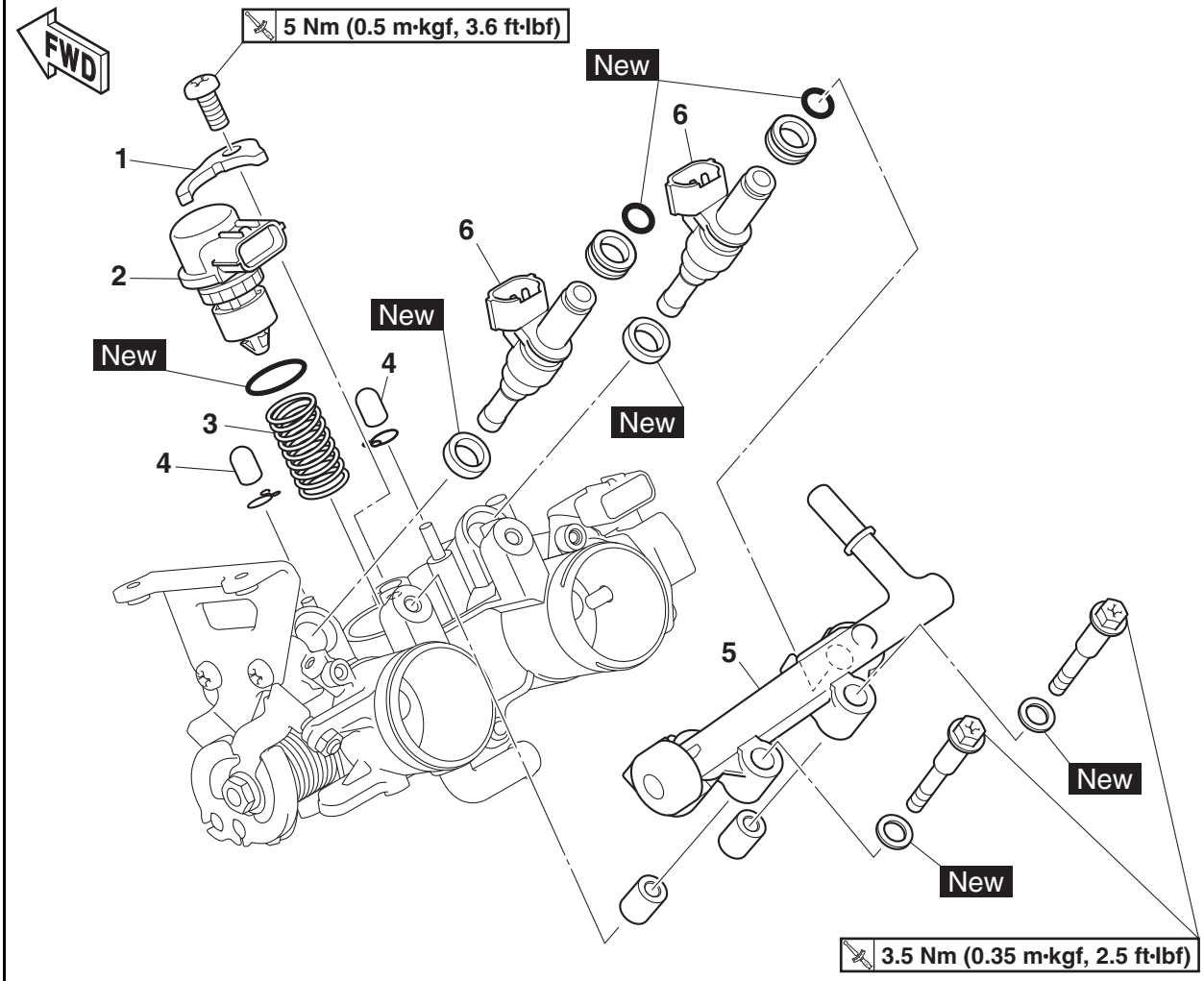

Order	Job/Parts to remove	Q'ty	Remarks
1	ISC (Idle Speed Control) unit plate	1	
2	ISC (Idle Speed Control) unit	1	
3	Spring	1	
4	Cap	2	
5	Fuel rail	1	
6	Fuel injector	2	

EAS30475
CHECKING THE INJECTORS (BEFORE REMOVING)

1. Check:
   - Injectors
     Use the diagnostic code numbers "36–37".
     Refer to "SELF-DIAGNOSTIC FUNCTION AND DIAGNOSTIC CODE TABLE" on page 9-5.

EAS30476
REMOVING THE INJECTORS

EWA17330
WARNING

- **Check the injectors in a well-ventilated area free of combustible materials. Make sure that there is no smoking or use of electric tools in the vicinity of the injectors.**
- **Be careful when disconnecting the fuel hose. Any remaining pressure in the fuel hose may cause the fuel to spray out. Place a container or rag under the hose to catch any fuel that spills. Always clean up any spilt fuel immediately.**
- **Turn the main switch to "OFF" and disconnect the negative battery lead from the battery terminal before removing the injectors.**

1. Remove:
   - Fuel rail "1"

▼▼▼▼▼▼▼▼▼▼▼▼▼▼▼▼▼▼▼▼▼▼▼▼▼▼▼▼▼▼▼▼▼▼▼

a. Remove the fuel rail bolts "2" as shown.

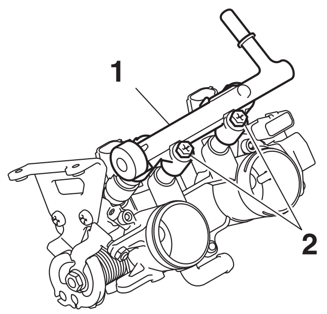

▲▲▲▲▲▲▲▲▲▲▲▲▲▲▲▲▲▲▲▲▲▲▲▲▲▲▲▲▲▲▲▲▲▲▲

EAS30477
CHECKING THE INJECTORS

1. Check:
   - Injectors
     Obstruction → Replace and check the fuel pump/fuel supply system.
     Deposit → Replace.
     Damage → Replace.
2. Check:
   - Injector resistance
     Refer to "CHECKING THE FUEL INJECTORS" on page 8-130.

EAS30479
CHECKING THE THROTTLE BODIES

TIP

Before checking the throttle bodies, check the following items:
- Valve clearance
- Spark plugs
- Air filter element
- Throttle body joint
- Fuel hose
- Air induction system
- Exhaust system
- Crankcase breather hose

EWA17850
WARNING

If the throttle bodies are subjected to strong shocks or dropped during checking, replace them.

1. Check:
   - Throttle bodies
     Cracks/damage → Replace the throttle bodies.

EAS31367
CHECKING THE THROTTLE BODIES AND ISC (IDLE SPEED CONTROL) UNIT

1. Remove the throttle bodies from the vehicle.

TIP

Before removing the throttle bodies, disconnect the throttle cables and couplers.

Cleaning the throttle bodies

1. Clean:
   - Throttle bodies

ECA20910
NOTICE

- **Observe the following precautions; otherwise, the throttle bodies may not operate properly.**
- **Do not open the throttle valves quickly.**
- **Do not subject the throttle bodies to excessive force.**
- **Wash the throttle bodies in a petroleum-based solvent.**
- **Do not use any caustic carburetor cleaning solution.**
- **Do not apply cleaning solvent directly to any plastic parts, sensors, or seals.**
- **Do not directly push the throttle valves to open them.**

- **Do not turn the bypass air screws “a”; otherwise, the throttle body synchronization will be affected.**

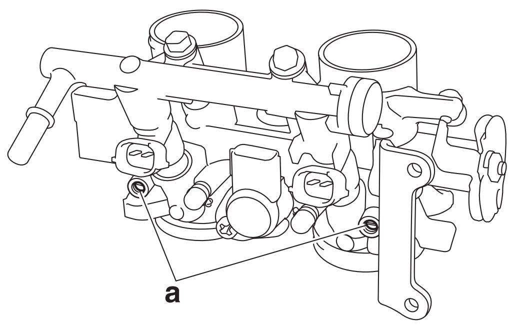

▼▼▼▼▼▼▼▼▼▼▼▼▼▼▼▼▼▼▼▼▼▼▼▼▼▼▼▼▼▼▼▼▼▼

a. Place the throttle bodies on a flat surface with the air filter case side facing up.
b. Push the lever in the direction shown in the illustration to hold the throttle valves in the open position.

EWA16680

WARNING

When cleaning the throttle bodies, be careful not to injure yourself on the throttle valves or other components of the throttle bodies.

ECA21190

NOTICE

- **Do not use tools to open the throttle valves or to keep them in the open position.**
- **Do not open the throttle valves quickly.**

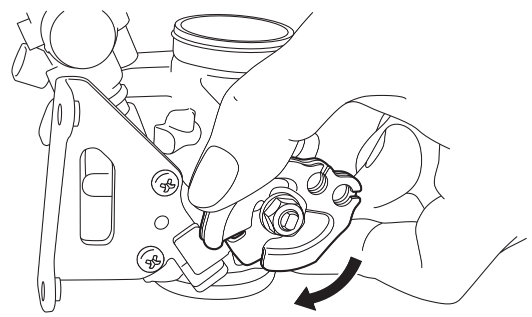

c. Apply a petroleum-based solvent to the throttle valves and the inside of the throttle bodies to remove any carbon deposits.

TIP

- Do not allow any petroleum-based solvent to enter the opening for the injectors.
- Do not apply any petroleum-based solvent to the portions of the throttle valve shafts between the throttle bodies.

d. Remove the carbon deposits from the inside of each throttle body in a downward direction, from the air filter case side of the throttle body to the engine side.

ECA18470

NOTICE

- **Do not use a tool, such as a wire brush, to remove the carbon deposits; otherwise, the inside of the throttle bodies may be damaged.**
- **Do not allow carbon deposits or other foreign materials to enter any of the passages in each throttle body or in the space between the throttle valve shaft and the throttle body.**

e. After removing the carbon deposits, clean the inside of the throttle bodies with a petroleum-based solvent, and then dry the throttle bodies using compressed air.
f. Make sure that there are no carbon deposits or other foreign materials in any of the passages “a” in each throttle body or in the space “b” between the throttle valve shaft and the throttle body.

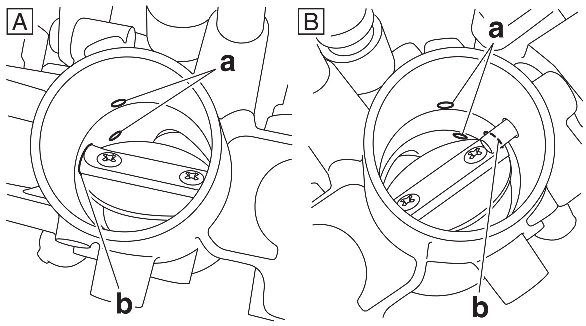

A. #1 cylinder
B. #2 cylinder

▲▲▲▲▲▲▲▲▲▲▲▲▲▲▲▲▲▲▲▲▲▲▲▲▲▲▲▲▲▲▲▲▲▲

Cleaning the ISC (idle speed control) unit

1. Remove:
   - ISC (Idle Speed Control) unit plate
   - ISC (Idle Speed Control) unit
   - O-ring
   - Spring

ECA21780

NOTICE

Because the force of the spring may push out the ISC unit unexpectedly, be sure to hold the ISC unit when removing the components.

2. Clean:
   - ISC (Idle Speed Control) unit “1”

	Recommended cleaning agent: Yamaha oil & brake cleaner

ECA21920

NOTICE

- **Be sure to use the recommended cleaning agent.**
- **Do not spray the cleaning agent directly onto the ISC unit or throttle bodies and do not immerse them in the cleaning agent.**
- **To prevent scratching the components, do not use a brush, metal file, or other abrasive tool.**
- **Do not clean with compressed air.**
- **Do not allow the removed deposits or foreign materials to adhere to the sealing surfaces of the O-ring.**
- **Do not scratch or deform the ISC unit or air passage; otherwise, poor starting performance, an unstable engine idling speed, or uncontrollable engine speed could result.**
- **Do not clean any areas other than those indicated in the illustrations. If the cleaning agent attaches to the ISC unit or enters the throttle bodies, thoroughly wipe it off.**

TIP

Clean the area “a” of the ISC unit and the ISC unit installation hole “b” in the throttle bodies.

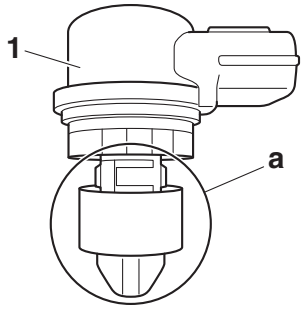

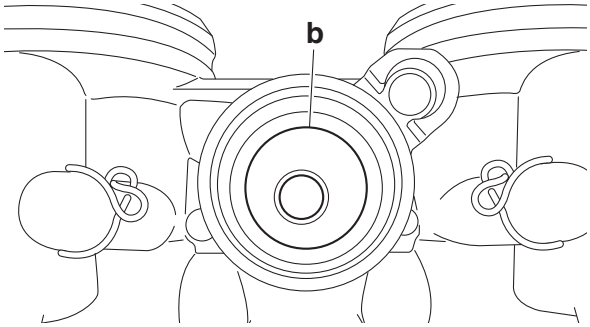

3. Install:
   - Spring
   - O-ring “1” New
   - ISC (Idle Speed Control) unit “2”
   - ISC (Idle Speed Control) unit plate “3”

ISC (Idle Speed Control) unit plate screw
5 Nm (0.5 m·kgf, 3.6 ft·lbf)

ECA21800

NOTICE

- **Do not use the ISC unit if it was dropped.**
- **Do not allow water to enter the ISC unit and do not allow foreign materials to adhere to the assembly.**
- **Do not touch the terminals of the coupler directly.**
- **Because the force of the spring may push out the ISC unit unexpectedly, be sure to hold the motor assembly when installing the components.**

TIP

- Install the new O-ring until it contacts the raised portion of the ISC unit.
- Align the slot “a” in the ISC unit plate with the projection “b” on the ISC unit.

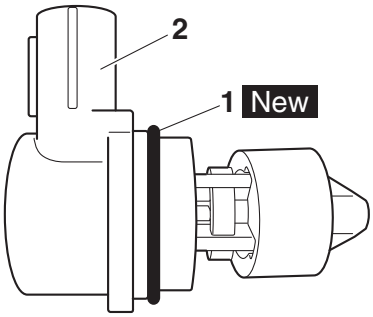

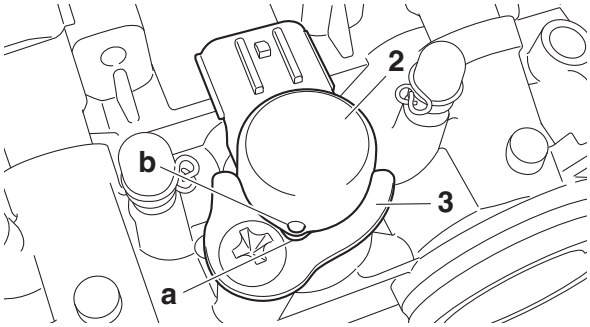

Resetting the ISC (idle speed control) learning values

1. Install:
   - Throttle bodies
2. Reset:
   - ISC (idle speed control) learning values
     Use the diagnostic code number “67”.
     Refer to “SELF-DIAGNOSTIC FUNCTION AND DIAGNOSTIC CODE TABLE” on page 9-5.

3. Adjust:
   - Throttle bodies synchronizing
     Out of specification → Replace the throttle bodies.
     Refer to “SYNCHRONIZING THE THROTTLE BODIES” on page 3-8.

EAS31317
CHECKING THE THROTTLE BODY JOINT

1. Check:
   - Throttle body joint
     Cracks/damage → Replace.

EAS31124
INSTALLING THE FUEL INJECTORS

ECA20000
NOTICE

- **Always use new O-rings.**
- **When checking the injectors, do not allow any foreign material to enter or adhere to the injectors, fuel rail, or O-rings.**
- **Be careful not to twist or pinch the O-rings when installing the injectors.**
- **If an injector is subject to strong shocks or excessive force, replace it.**
- **If installing the original fuel rail and screws, remove the white paint marks using a cleaning solvent. Otherwise, paint chips on the screw seats could prevent the screws from being tightened to the specified torque.**

1. Install new seals onto the end of each injector.
2. Install the fuel injectors “1” to the fuel rail “2”.

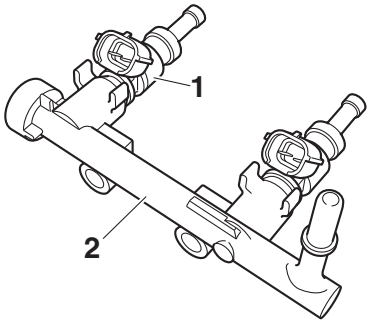

3. Install the fuel injector assemblies to the throttle bodies.

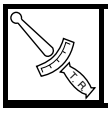	**Fuel rail bolt** **3.5 Nm (0.35 m·kgf, 2.5 ft·lbf)**

4. Check the injector pressure after the fuel injectors are installed to the throttle bodies.
   Refer to “CHECKING THE INJECTOR PRESSURE” on page 7-11.

EAS30481
CHECKING THE INJECTOR PRESSURE

TIP

- After installing the fuel injectors, perform the following steps to check the injector pressure.
- Do not allow any foreign materials to enter the fuel lines.

1. Check:
   - Injector pressure

▼▼▼▼▼▼▼▼▼▼▼▼▼▼▼▼▼▼▼▼▼▼▼▼▼▼▼▼▼▼▼▼▼▼▼▼▼▼

a. Connect the fuel injector pressure adapter “1” to the fuel rail “2”, and then connect an air compressor “3” to the adapter.
b. Connect the pressure gauge “4” to the fuel injector pressure adapter “1”.

	Pressure gauge **90890-03153** **Pressure gauge** **YU-03153** **Fuel injector pressure adapter** **90890-03210** **Fuel injector pressure adapter** **YU-03210**

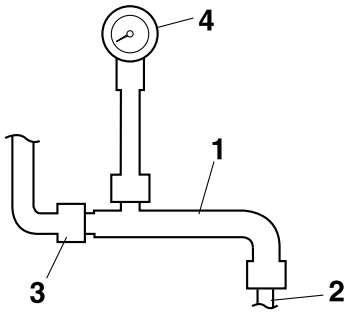

c. Close the valve on the fuel injector pressure adapter.
d. Apply air pressure with the air compressor.
e. Open the valve on the fuel injector pressure adapter until the specified pressure is reached.

	Specific air pressure **490 kPa (4.9 kgf/cm^2, 69.7 psi)**

ECA18440
NOTICE

Never exceed the specified air pressure or damage could occur.

f. Close the valve on the fuel injector pressure adapter.
g. Check that the specified air pressure is held for about one minute.

Pressure drops → Check the pressure gauge and adapter.
Check the seals and O-rings, and then reinstall.
Replace the fuel injectors.

▲▲▲▲▲▲▲▲▲▲▲▲▲▲▲▲▲▲▲▲▲▲▲▲▲▲▲▲▲▲▲▲

EAS30482

CHECKING THE FUEL PRESSURE

1. Check:
   - Fuel pressure

▼▼▼▼▼▼▼▼▼▼▼▼▼▼▼▼▼▼▼▼▼▼▼▼▼▼▼▼▼▼▼▼

a. Remove the fuel tank bracket bolts "1" and holdup the fuel tank.

ECA20070

NOTICE

When lifting up the fuel tank, be careful not to pull the fuel tank overflow hose and fuel tank breather hose.

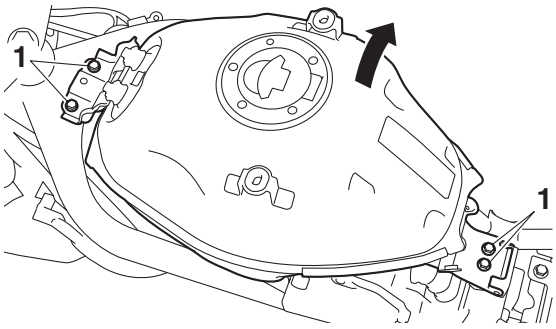

b. Disconnect the fuel hose "2" from the throttle bodies.

EWA16640

WARNING

Cover fuel hose connections with a cloth when disconnecting them. Residual pressure in the fuel lines could cause fuel to spurt out when removing the hoses.

ECA20010

NOTICE

Be sure to disconnect the fuel hose by hand. Do not forcefully disconnect the hose with tools.

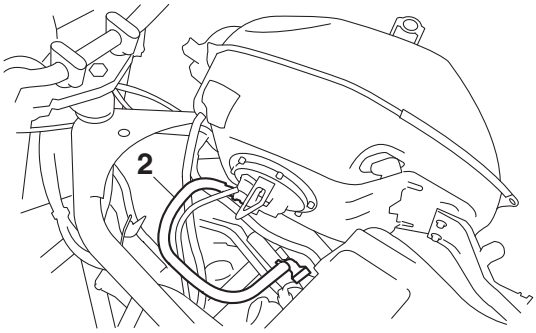

c. Connect the pressure gauge "3" and adapter "4" to the fuel hose "2".

Pressure gauge
90890-03153
Pressure gauge
YU-03153
Fuel pressure adapter
90890-03176
Fuel pressure adapter
YM-03176

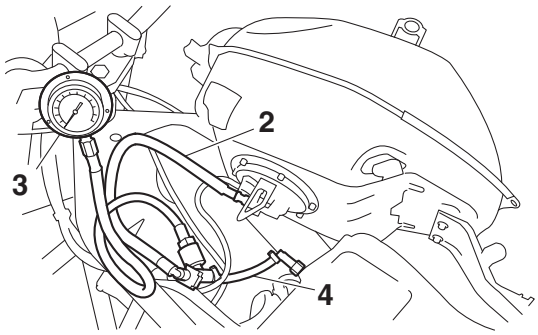

d. Start the engine.
e. Measure the fuel pressure.

Fuel line pressure at idling
220–300 kPa (2.2–3.0 kgf/cm^2, 31.9–43.5 psi)

Faulty → Replace the fuel pump.

▲▲▲▲▲▲▲▲▲▲▲▲▲▲▲▲▲▲▲▲▲▲▲▲▲▲▲▲▲▲▲▲

2. Install:
   - Fuel tank

Rear fuel tank bracket bolt (frame)
12 Nm (1.2 m·kgf, 8.7 ft·lbf)
Front fuel tank bracket bolt (frame)
12 Nm (1.2 m·kgf, 8.7 ft·lbf)

Refer to "FUEL TANK" on page 7-1.

EAS30937

INSTALLING THE THROTTLE BODY JOINT

1. Install:
   - Throttle body joint "1"

Throttle body joint clamp screw
2.5 Nm (0.25 m·kgf, 1.8 ft·lbf)

TIP

Align the projection "a" on the throttle body joint with the slot "b" in the throttle body joint clamp.

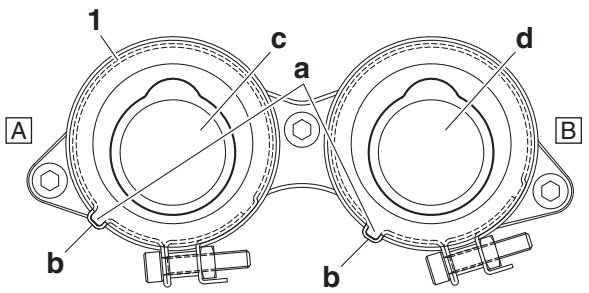

c. #1 cylinder
d. #2 cylinder
A. Left
B. Right

EAS31160

REPLACING THE THROTTLE BODIES

1. Remove the throttle bodies from the vehicle.

TIP

Before removing the throttle bodies, disconnect the throttle cables and coupler.

2. Install a new throttle bodies to the vehicle.
3. Reset:
   - SC (idle speed control) learning valves
     Use the diagnostic code number “67”.
     Refer to “SELF-DIAGNOSTIC FUNCTION AND DIAGNOSTIC CODE TABLE” on page 9-5.

	Yamaha diagnostic tool **90890-03231**

4. Reset:
   - A/F control learning valves using the Yamaha diagnostic tool.
     Execute the diagnostic mode (code No. 87)
     Refer to “SELF-DIAGNOSTIC FUNCTION AND DIAGNOSTIC CODE TABLE” on page 9-5.

	Yamaha diagnostic tool **90890-03231**

5. Check:
   - Engine idling speed
     Start the engine, warm it up, and then measure the engine idling speed.

	Engine idling speed **1300–1500 r/min**

EAS20071

AIR INDUCTION SYSTEM

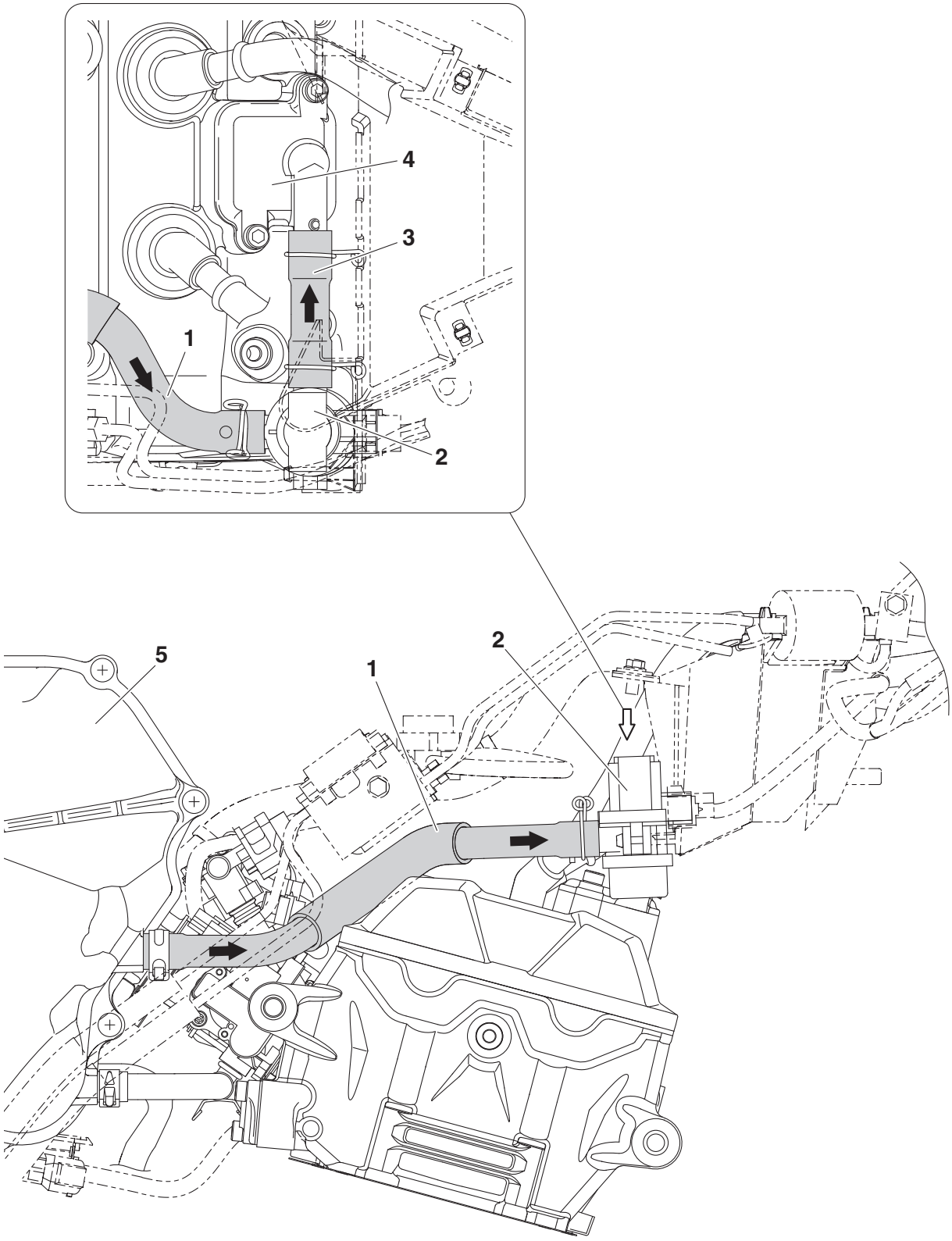

1. Air induction system hose (Air filter case to air cut-off valve)
2. Air cut-off valve
3. Air induction system hose (air cut-off valve to reed valve cover)
4. Reed valve assembly
5. Air filter case

Removing the air cut-off valve and reed valve

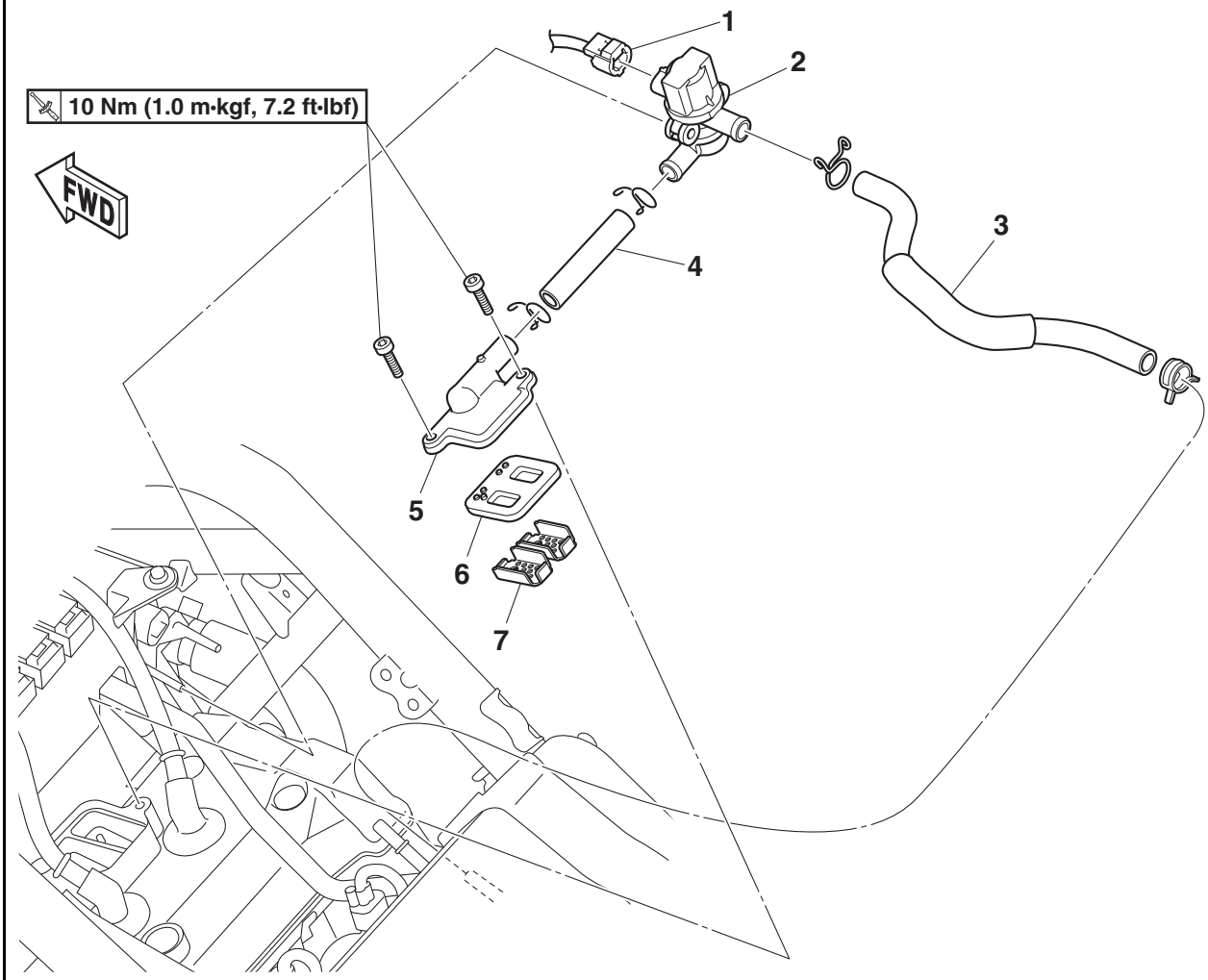

Order	Job/Parts to remove	Q'ty	Remarks
	Rider seat		Refer to "GENERAL CHASSIS (1)" on page 4-1.
	Side panel assemblies		Refer to "GENERAL CHASSIS (2)" on page 4-3.
	Fuel tank cover assembly		Refer to "GENERAL CHASSIS (3)" on page 4-8.
	Fuel tank		Refer to "FUEL TANK" on page 7-1.
1	Air induction system solenoid coupler	1	Disconnect.
2	Air cut-off valve	1	
3	Air induction system hose (air filter case to air cut-off valve)	1	
4	Air induction system hose (air cut-off valve to reed valve cover)	1	
5	Reed valve cover	1	
6	Reed valve assembly	1	
7	Reed valve plate	2	

EAS30488
CHECKING THE AIR INDUCTION SYSTEM

Air injection
The air induction system burns unburned exhaust gases by injecting fresh air (secondary air) into the exhaust port, reducing the emission of hydrocarbons. When there is negative pressure at the exhaust port, the reed valve opens, allowing secondary air to flow into the exhaust port. The required temperature for burning the unburned exhaust gases is approximately 600 to 700 °C (1112 to 1292 °F).

Air cut-off valve
The air cut-off valve is controlled by the signals from the ECU in accordance with the combustion conditions. Ordinarily, the air cut-off valve opens to allow the air to flow during idle and closes to cut-off the flow when the vehicle is being driven. However, if the coolant temperature is below the specified value, the air cut-off valve remains open and allows the air to flow into the exhaust pipe until the temperature becomes higher than the specified value.

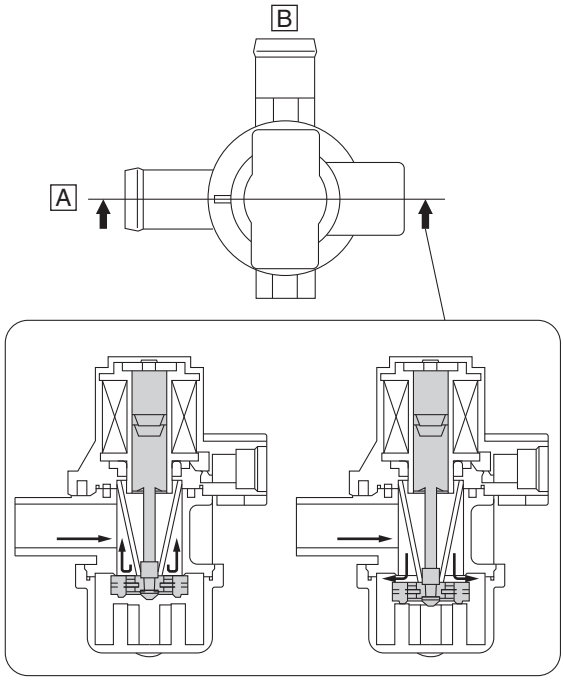

A. From the air filter case
B. To the reed valve

1. Check:
   - Hoses
     Loose connections → Connect properly.
     Cracks/damage → Replace.
2. Check:
   - Reed valve
   - Reed valve stopper
   - Reed valve seat
     Cracks/damage → Replace the reed valve assembly.
3. Check:
   - Air induction system solenoid
     Refer to “CHECKING THE AIR INDUCTION SYSTEM SOLENOID” on page 8-129.

EAS30489
INSTALLING THE AIR INDUCTION SYSTEM
1. Install:
   - Reed valve plate “1”

TIP
Align the protection “a” on the cylinder head cover with the hole “b” in the reed valve plate.

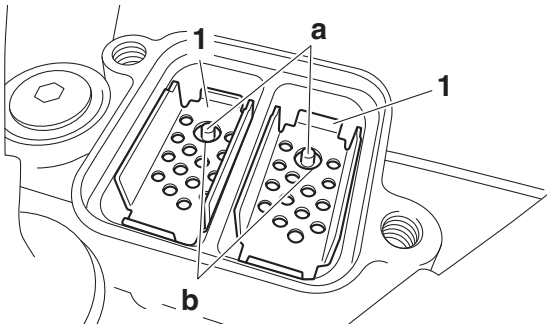

2. Install:
   - Reed valve assembly

TIP
Install the reed valve assembly so that the open side turns to the intake side of the engine.

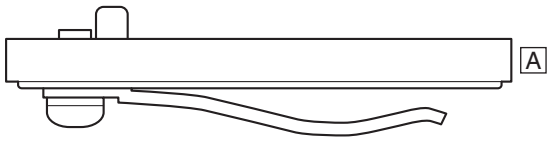

A. Intake side

ELECTRICAL SYSTEM

IGNITION SYSTEM 8-1
CIRCUIT DIAGRAM 8-1
ENGINE STOPPING DUE TO SIDESTAND OPERATION 8-3
TROUBLESHOOTING 8-4

ELECTRIC STARTING SYSTEM 8-7
CIRCUIT DIAGRAM 8-7
STARTING CIRCUIT CUT-OFF SYSTEM OPERATION 8-9
TROUBLESHOOTING 8-10

CHARGING SYSTEM 8-13
CIRCUIT DIAGRAM 8-13
TROUBLESHOOTING 8-15

LIGHTING SYSTEM 8-17
CIRCUIT DIAGRAM 8-17
TROUBLESHOOTING 8-19

SIGNALING SYSTEM 8-21
CIRCUIT DIAGRAM 8-21
TROUBLESHOOTING 8-23

COOLING SYSTEM 8-29
CIRCUIT DIAGRAM 8-29
TROUBLESHOOTING 8-31

FUEL INJECTION SYSTEM 8-33
CIRCUIT DIAGRAM 8-33
ECU SELF-DIAGNOSTIC FUNCTION 8-35
TROUBLESHOOTING METHOD 8-35
YAMAHA DIAGNOSTIC TOOL 8-36
TROUBLESHOOTING DETAILS 8-39

FUEL PUMP SYSTEM 8-73
CIRCUIT DIAGRAM 8-73
TROUBLESHOOTING 8-75

ABS (ANTI-LOCK BRAKE SYSTEM) 8-77
CIRCUIT DIAGRAM 8-77
ABS COUPLER LOCATION CHART 8-79
MAINTENANCE OF THE ABS ECU 8-81
ABS TROUBLESHOOTING OUTLINE 8-81
BASIC INSTRUCTIONS FOR TROUBLESHOOTING 8-82
BASIC PROCESS FOR TROUBLESHOOTING 8-83
[A] CHECKING THE ABS WARNING LIGHT 8-85
[A-1] ONLY THE ABS WARNING LIGHT FAILS TO COME ON 8-85
[A-2] ALL INDICATOR LIGHTS FAIL TO COME ON 8-85
[A-3] THE ABS WARNING LIGHT COMES ON 8-85
[A-4] ONLY THE ABS ECU FAILS TO COMMUNICATE
(The select unit screen does not appear.) 8-85
[A-5] ABS ECU AND FI ECU FAIL TO COMMUNICATE
(Cannot connect due to a tool error.) 8-86
[B-1] MALFUNCTION ARE CURRENTLY DETECTED 8-86
[B-2] DIAGNOSIS USING THE FAULT CODES 8-86
[B-3] DELETING THE FAULT CODES 8-108
[C-1] FINAL CHECK 8-108

ELECTRICAL COMPONENTS 8-109
CHECKING THE SWITCHES 8-113
CHECKING THE BULBS AND BULB SOCKETS 8-116
CHECKING THE FUSES 8-117
REPLACING THE ECU (engine control unit) 8-117
REMOVING THE ECU (engine control unit) 8-118
INSTALLING THE ECU (engine control unit) 8-118
CHECKING AND CHARGING THE BATTERY 8-118
CHECKING THE RELAYS 8-121
CHECKING THE DIODES 8-122
CHECKING THE SPARK PLUG CAPS 8-123
CHECKING THE IGNITION COILS 8-124
CHECKING THE IGNITION SPARK GAP 8-124
CHECKING THE CRANKSHAFT POSITION SENSOR 8-125
CHECKING THE LEAN ANGLE SENSOR 8-125
CHECKING THE STARTER MOTOR OPERATION 8-126
CHECKING THE STATOR COIL 8-126
CHECKING THE RECTIFIER/REGULATOR 8-126
CHECKING THE FUEL SENDER 8-127
CHECKING THE FUEL METER 8-127
CHECKING THE RADIATOR FAN MOTOR 8-128
CHECKING THE COOLANT TEMPERATURE SENSOR 8-128
CHECKING THE AIR INDUCTION SYSTEM SOLENOID 8-129
CHECKING THE GEAR POSITION SWITCH 8-129
CHECKING THE FUEL INJECTORS 8-130

EAS20072
IGNITION SYSTEM

EAS30490
CIRCUIT DIAGRAM

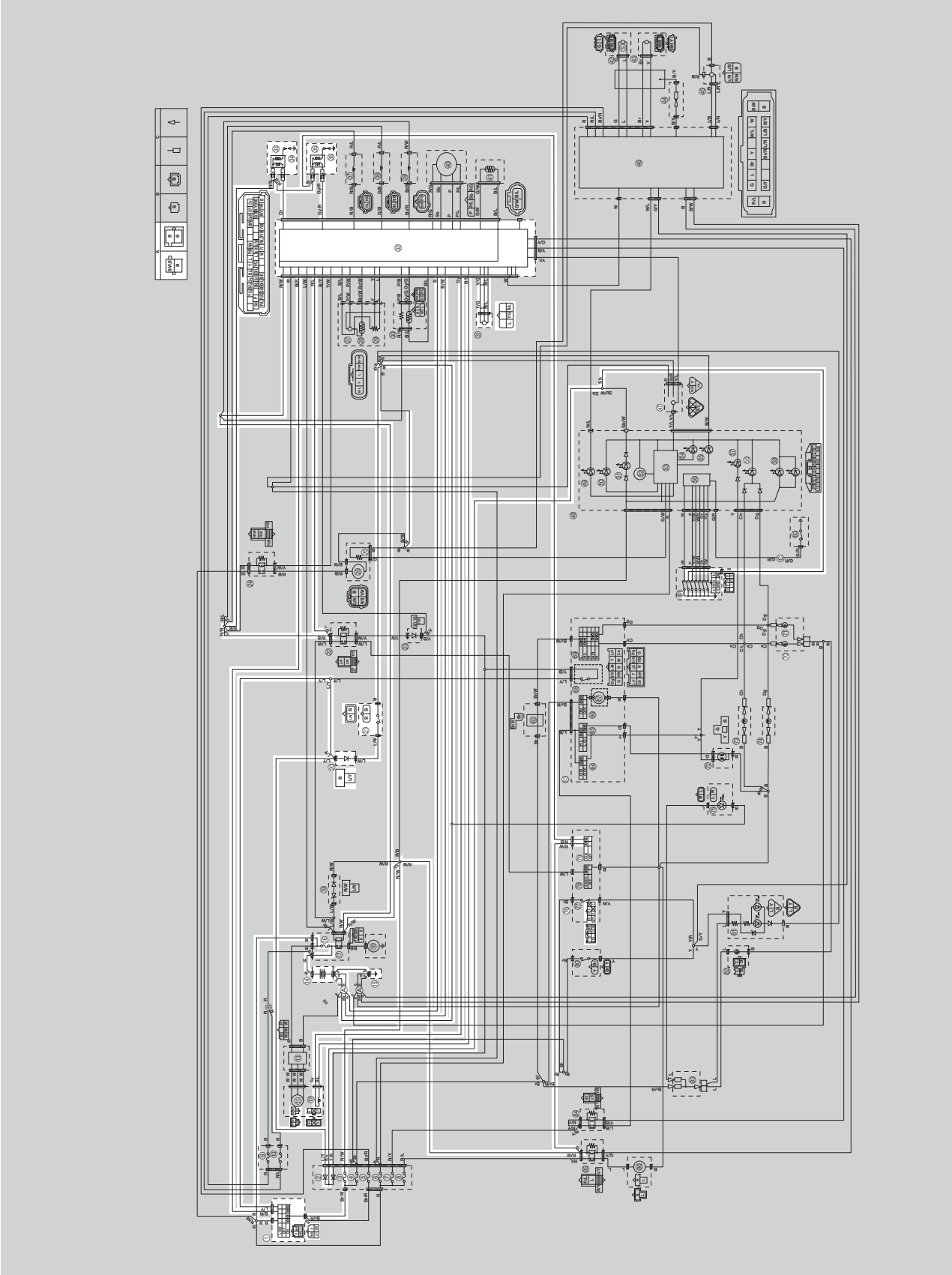

1. Main switch
2. Diode 1
3. Ignition fuse
12. Crankshaft position sensor
14. Battery
15. Engine ground
16. Main fuse
20. Diode 3
21. Sidestand switch
31. Lean angle sensor
32. ECU (Engine Control Unit)
33. Ignition coil #1
34. Spark plug #1
35. Ignition coil #2
36. Spark plug #2
61. Gear position switch
76. Handlebar switch (right)
79. Engine stop switch

EAS30491

ENGINE STOPPING DUE TO SIDESTAND OPERATION

When the engine is running and the transmission is in gear, the engine will stop if the sidestand is moved down. This is because the electric current from the ECU does not flow to the ignition coils or fuel injectors when the gear position switch (neutral circuit) or sidestand switch is open. However, the engine continues to run under the following conditions:

- The transmission is in gear (the neutral circuit of the gear position switch is open) and the sidestand is up (the sidestand switch circuit is closed).
- The transmission is in neutral (the neutral circuit of the gear position switch is closed) and the sidestand is down (the sidestand switch circuit is open).

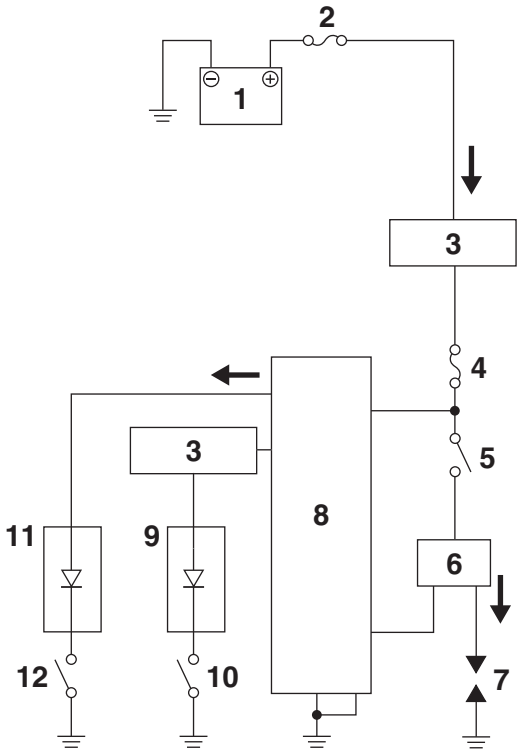

1. Battery
2. Main fuse
3. Main switch
4. Ignition fuse
5. Engine stop switch
6. Ignition coil
7. Spark plug
8. ECU (Engine Control Unit)
9. Diode 1
10. Gear position switch (neutral circuit)
11. Diode 3
12. Sidestand switch

EAS30492

TROUBLESHOOTING

The ignition system fails to operate (no spark or intermittent spark).

TIP

- Before troubleshooting, remove the following part(s):

1. Passenger seat
2. Center cover
3. Rider seat
4. Side panel assemblies
5. Fuel tank

1. Check the fuses. (Ignition, and main) Refer to "CHECKING THE FUSES" on page 8-117.	NG →	Replace the fuse(s).
OK ↓		
2. Check the battery. Refer to "CHECKING AND CHARGING THE BATTERY" on page 8-118.	NG →	• Clean the battery terminals. • Recharge or replace the battery.
OK ↓		
3. Check the spark plugs. Refer to "CHECKING THE SPARK PLUGS" on page 3-4.	NG →	Re-gap or replace the spark plug(s).
OK ↓		
4. Check the ignition spark gap. Refer to "CHECKING THE IGNITION SPARK GAP" on page 8-124.	OK →	Ignition system is OK.
NG ↓		
5. Check the spark plug caps. Refer to "CHECKING THE SPARK PLUG CAPS" on page 8-123.	NG →	Replace the spark plug cap(s).
OK ↓		
6. Check the ignition coils. Refer to "CHECKING THE IGNITION COILS" on page 8-124.	NG →	Replace the ignition coil(s).
OK ↓		
7. Check the crankshaft position sensor. Refer to "CHECKING THE CRANKSHAFT POSITION SENSOR" on page 8-125.	NG →	Replace the stator coil assembly (Stator coil/Crankshaft position sensor).
OK ↓		

8. Check the main switch. Refer to “CHECKING THE SWITCHES” on page 8-113.	NG →	Replace the main switch.
OK ↓		
9. Check the engine stop switch. Refer to “CHECKING THE SWITCHES” on page 8-113.	NG →	• The engine stop switch is faulty. • Replace the right handlebar switch.
OK ↓		
10. Check the sidestand switch. Refer to “CHECKING THE SWITCHES” on page 8-113.	NG →	Replace the sidestand switch.
OK ↓		
11. Check the diodes (Diode 1 and 3). Refer to “CHECKING THE DIODES” on page 8-122.	NG →	Replace the diode(s).
OK ↓		
12. Check the lean angle sensor. Refer to “CHECKING THE LEAN ANGLE SENSOR” on page 8-125.	NG →	Replace the lean angle sensor.
OK ↓		
13. Check the entire ignition system wiring. Refer to “CIRCUIT DIAGRAM” on page 8-1.	NG →	Properly connect or replace the wiring harness.
OK ↓		
Replace the ECU. Refer to “REPLACING THE ECU (engine control unit)” on page 8-117.		

EAS20073
ELECTRIC STARTING SYSTEM

EAS30493
CIRCUIT DIAGRAM

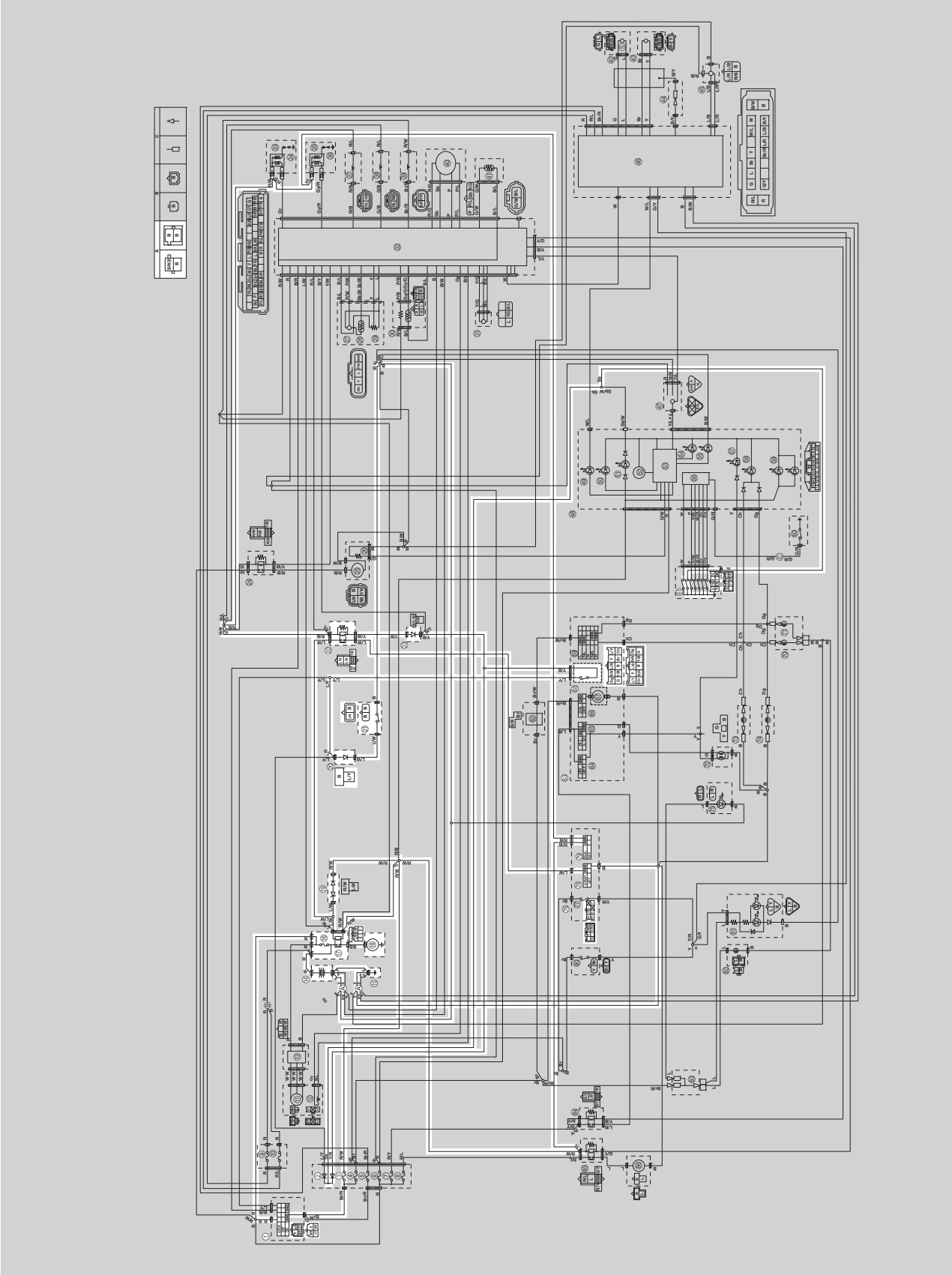

1. Main switch
2. Diode 1
3. Ignition fuse
14. Battery
15. Engine ground
16. Main fuse
17. Starter relay
18. Starter motor
19. Diode 2
20. Diode 3
21. Sidestand switch
22. Starting circuit cut-off relay
23. Diode 4
61. Gear position switch
63. Handlebar switch (left)
68. Clutch switch
76. Handlebar switch (right)
78. Start switch
79. Engine stop switch

EAS30494

STARTING CIRCUIT CUT-OFF SYSTEM OPERATION

If the engine stop switch is set to "◯" and the main switch is set to "ON" (both switches are closed), the starter motor can only operate if at least one of the following conditions is met:

- The transmission is in neutral (the neutral circuit of the gear position switch is closed).
- The clutch lever is pulled to the handlebar (the clutch switch is closed) and the sidestand is up (the sidestand switch is closed).

The starting circuit cut-off relay prevents the starter motor from operating when neither of these conditions has been met. In this instance, the starting circuit cut-off relay is open so current cannot reach the starter motor. When at least one of the above conditions has been met, the starting circuit cut-off relay is closed and the engine can be started by pressing the start switch "⊛".

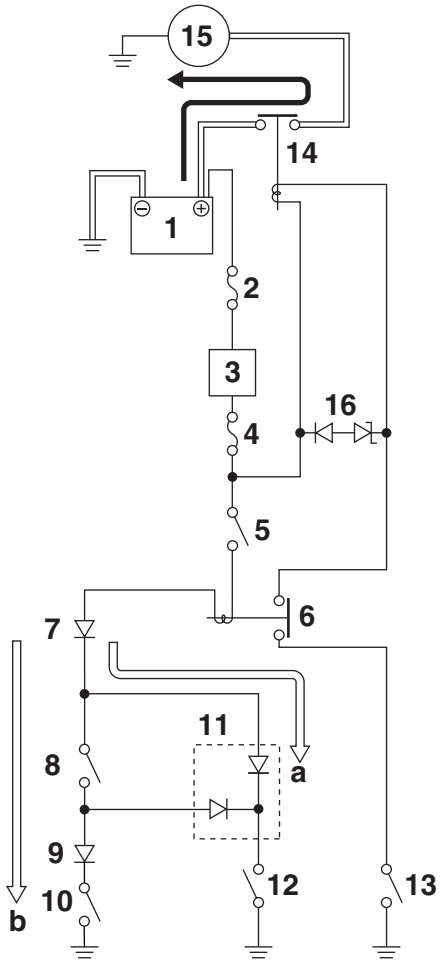

a. WHEN THE TRANSMISSION IS IN NEUTRAL
b. WHEN THE SIDESTAND IS UP AND THE CLUTCH LEVER IS PULLED TO THE HANDLEBAR
1. Battery
2. Main fuse
3. Main switch
4. Ignition fuse
5. Engine stop switch
6. Starting circuit cut-off relay
7. Diode 4
8. Clutch switch
9. Diode 3
10. Sidestand switch
11. Diode 1
12. Gear position switch
13. Start switch
14. Starter relay
15. Starter motor
16. Diode 2

EAS30495

TROUBLESHOOTING

The starter motor fails to turn.

TIP

• Before troubleshooting, remove the following part(s):
1. Passenger seat
2. Center cover
3. Rider seat
4. Side panel assemblies
5. Fuel tank
6. Air filter case
7. Throttle bodies

1. Check the fuses. (Ignition, and main) Refer to "CHECKING THE FUSES" on page 8-117.	NG →	Replace the fuse(s).
OK ↓		
2. Check the battery. Refer to "CHECKING AND CHARGING THE BATTERY" on page 8-118.	NG →	• Clean the battery terminals. • Recharge or replace the battery.
OK ↓		
3. Check the starter motor operation. Refer to "CHECKING THE STARTER MOTOR OPERATION" on page 8-126.	OK →	Starter motor is OK. Perform the electric starting system troubleshooting, starting with step 5.
NG ↓		
4. Check the starter motor. Refer to "CHECKING THE STARTER MOTOR" on page 5-48.	NG →	Repair or replace the starter motor.
OK ↓		
5. Check the starting circuit cut-off relay. Refer to "CHECKING THE RELAYS" on page 8-121.	NG →	Replace the starting circuit cut-off relay.
OK ↓		
6. Check the starter relay. Refer to "CHECKING THE RELAYS" on page 8-121.	NG →	Replace the starter relay.
OK ↓		
7. Check the diodes. (Diode 1, 3, and 4) Refer to "CHECKING THE DIODES" on page 8-122.	NG →	Replace the diode(s).
OK ↓		

8. Check the main switch. Refer to “CHECKING THE SWITCHES” on page 8-113.	NG →	Replace the main switch.
OK ↓		
9. Check the gear position switch. Refer to “CHECKING THE GEAR POSITION SWITCH” on page 8-129.	NG →	Replace the gear position switch.
OK ↓		
10. Check the sidestand switch. Refer to “CHECKING THE SWITCHES” on page 8-113.	NG →	Replace the sidestand switch.
OK ↓		
11. Check the clutch switch. Refer to “CHECKING THE SWITCHES” on page 8-113.	NG →	Replace the clutch switch.
OK ↓		
12. Check the engine stop switch. Refer to “CHECKING THE SWITCHES” on page 8-113.	NG →	• The engine stop switch is faulty. • Replace the right handlebar switch.
OK ↓		
13. Check the start switch. Refer to “CHECKING THE SWITCHES” on page 8-113.	NG →	• The start switch is faulty. • Replace the right handlebar switch.
OK ↓		
14. Check the entire starting system wiring. Refer to “CIRCUIT DIAGRAM” on page 8-7.	NG →	Properly connect or replace the wiring harness.
OK ↓		
The starting system circuit is OK.		

EAS20074
CHARGING SYSTEM

EAS30496
CIRCUIT DIAGRAM

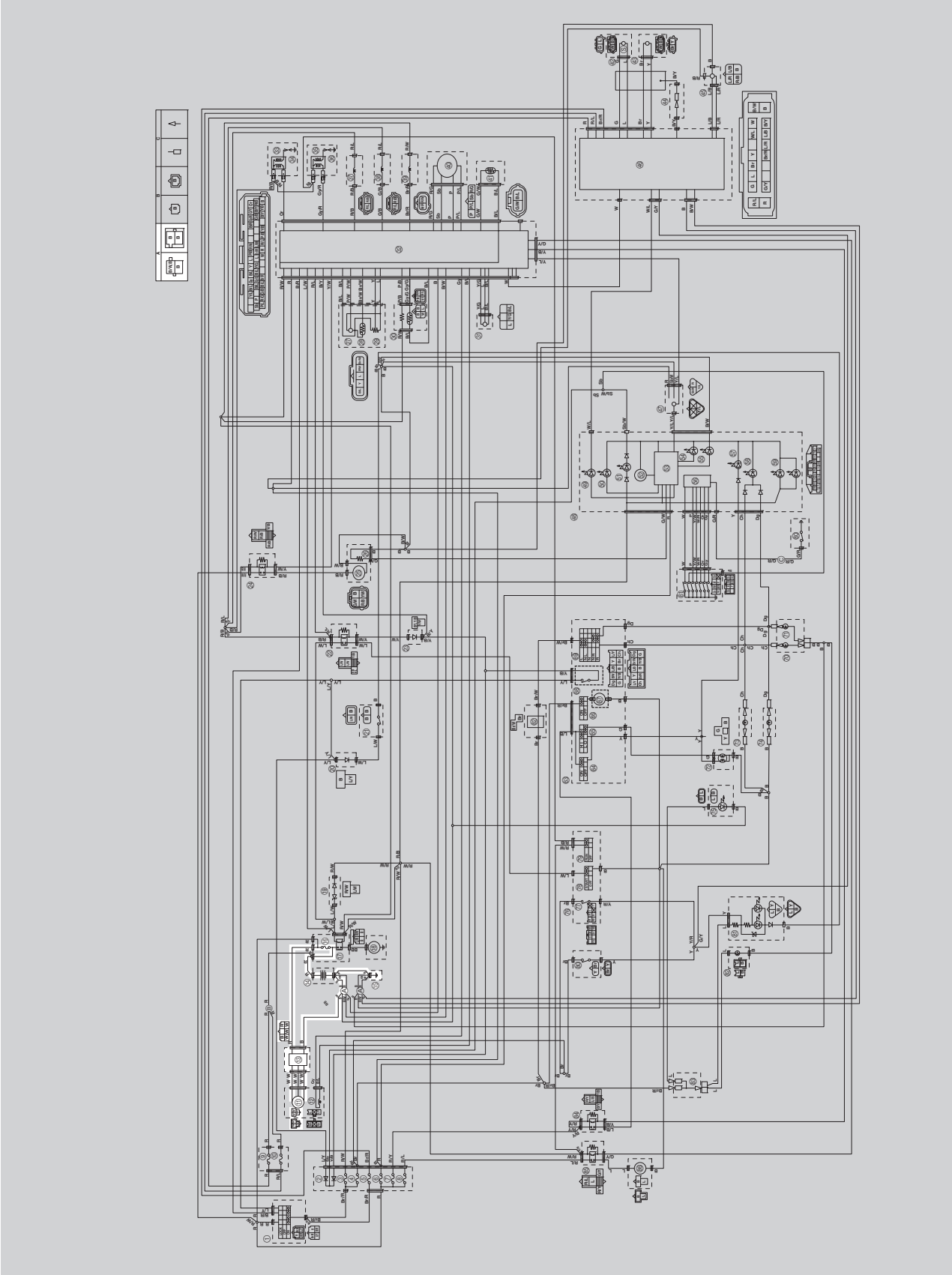

11. AC magneto
13. Rectifier/regulator
14. Battery
15. Engine ground
16. Main fuse

EAS30497

TROUBLESHOOTING

The battery is not being charged.

TIP

- Before troubleshooting, remove the following part(s):

1. Passenger seat
2. Center cover
3. Rider seat
4. Side panel assembly (left)

1. Check the fuse. (Main) Refer to "CHECKING THE FUSES" on page 8-117.	NG →	Replace the fuse.
OK ↓		
2. Check the battery. Refer to "CHECKING AND CHARGING THE BATTERY" on page 8-118.	NG →	• Clean the battery terminals. • Recharge or replace the battery.
OK ↓		
3. Check the stator coil. Refer to "CHECKING THE STATOR COIL" on page 8-126.	NG →	Replace the stator coil assembly (Stator coil/Crankshaft position sensor).
OK ↓		
4. Check the rectifier/regulator. Refer to "CHECKING THE RECTIFIER/REGULATOR" on page 8-126.	NG →	Replace the rectifier/regulator.
OK ↓		
5. Check the entire charging system wiring. Refer to "CIRCUIT DIAGRAM" on page 8-13.	NG →	Properly connect or replace the wiring harness.
OK ↓		
The charging system circuit is OK.		

EAS20075
LIGHTING SYSTEM

EAS30498
CIRCUIT DIAGRAM

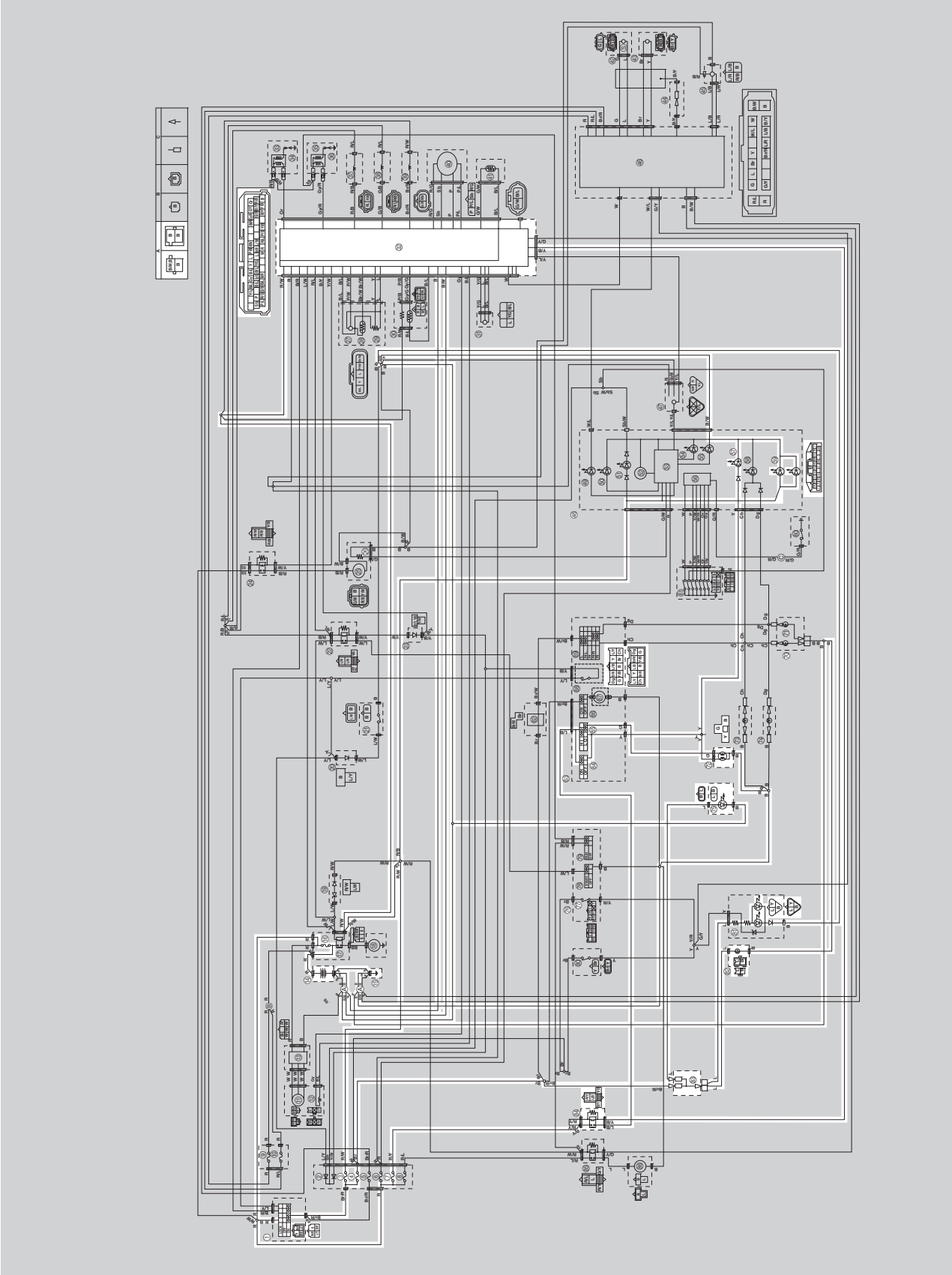

1. Main switch
3. Ignition fuse
4. Signaling system fuse
7. Headlight fuse
14. Battery
15. Engine ground
16. Main fuse
32. ECU (Engine Control Unit)
48. Meter assembly
57. High beam indicator light
59. Meter light
63. Handlebar switch (left)
64. Pass switch
65. Dimmer switch
72. Headlight
75. Auxiliary light
81. Tail/brake light
82. License plate light
83. License plate light connector
84. Headlight relay

EAS30499

TROUBLESHOOTING

Any of the following fail to light: headlight, high beam indicator light, taillight, license plate light, auxiliary light or meter light.

TIP

• Before troubleshooting, remove the following part(s):
1. Headlight assembly
2. Mudguard assembly cover
3. Passenger seat
4. Center cover
5. Rider seat
6. Side panel assemblies
7. Fuel tank

1. Check the each bulbs and bulb sockets condition. Refer to “CHECKING THE BULBS AND BULB SOCKETS” on page 8-116.	NG →	Replace the bulb(s) and bulb socket(s).
OK ↓		
2. Check the fuses. (Ignition, signaling system, headlight, and main) Refer to “CHECKING THE FUSES” on page 8-117.	NG →	Replace the fuse(s).
OK ↓		
3. Check the battery. Refer to “CHECKING AND CHARGING THE BATTERY” on page 8-118.	NG →	• Clean the battery terminals. • Recharge or replace the battery.
OK ↓		
4. Check the main switch. Refer to “CHECKING THE SWITCHES” on page 8-113.	NG →	Replace the main switch.
OK ↓		
5. Check the dimmer switch. Refer to “CHECKING THE SWITCHES” on page 8-113.	NG →	• The dimmer switch is faulty. • Replace the left handlebar switch.
OK ↓		
6. Check the pass switch. Refer to “CHECKING THE SWITCHES” on page 8-113.	NG →	• The pass switch is faulty. • Replace the left handlebar switch.
OK ↓		

7. Check the headlight relay. Refer to “CHECKING THE RELAYS” on page 8-121.	NG →	Replace the headlight relay.
OK ↓		
8. Check the entire lighting system wiring. Refer to “CIRCUIT DIAGRAM” on page 8-17.	NG →	Properly connect or replace the wiring harness.
OK ↓		
Replace the ECU, meter assembly, auxiliary light, or tail/brake light. Refer to“REPLACING THE ECU (engine control unit)” on page 8-117.		

EAS20076
SIGNALING SYSTEM

EAS30500
CIRCUIT DIAGRAM

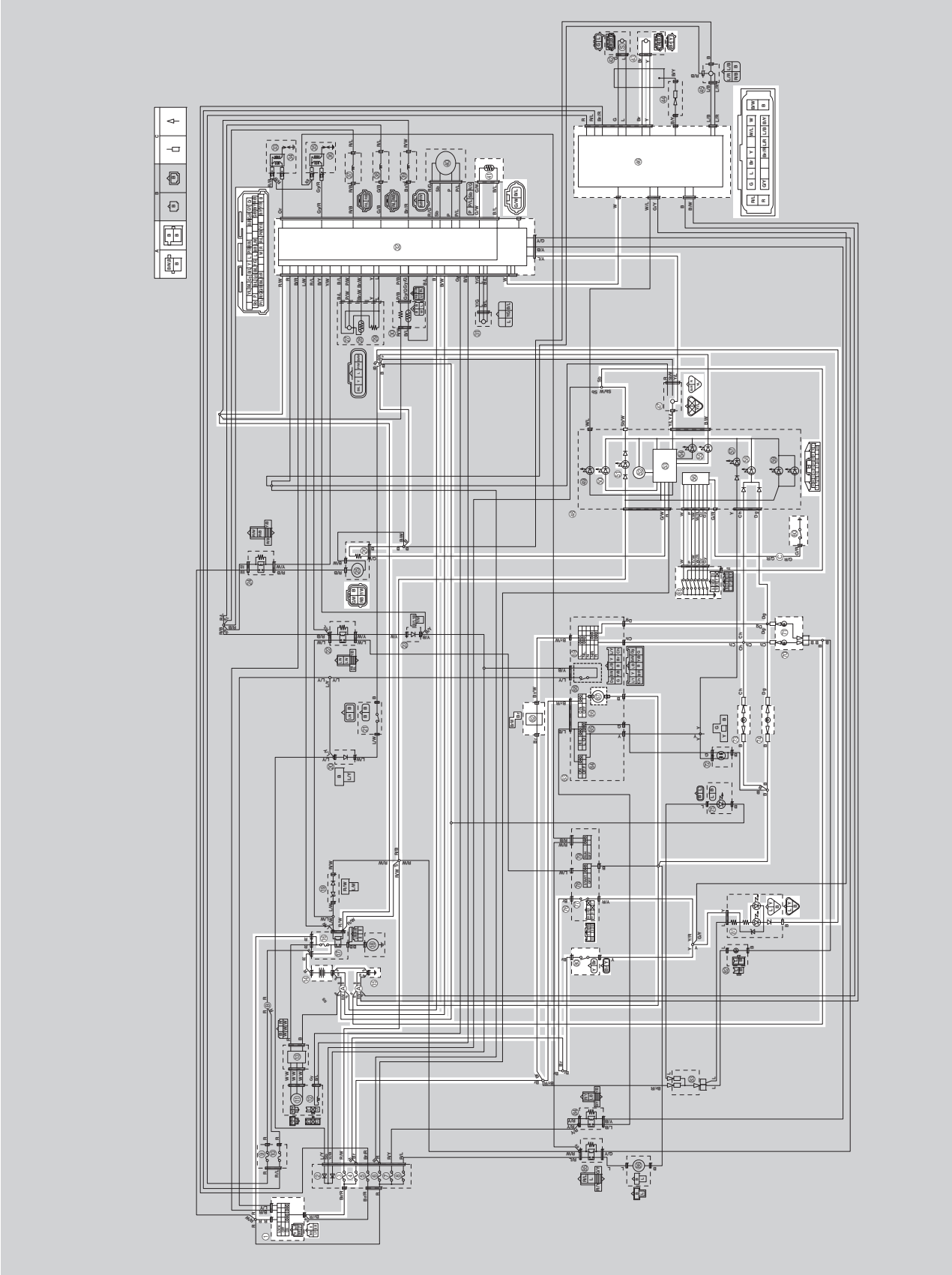

1. Main switch
3. Ignition fuse
4. Signaling system fuse
14. Battery
15. Engine ground
16. Main fuse
26. Fuel sender
32. ECU (Engine Control Unit)
41. Coolant temperature sensor
43. Rear wheel sensor
46. ABS ECU
47. Yamaha diagnostic tool coupler
48. Meter assembly
50. Oil pressure warning light
51. Neutral indicator light
52. Tachometer
53. Multi-function meter 1
55. Shift timing indicator light
56. Multi-function meter 2
58. Turn signal indicator light
60. Oil pressure switch
61. Gear position switch
62. Turn signal relay
63. Handlebar switch (left)
66. Horn switch
67. Horn
69. Turn signal switch
70. Rear turn signal light (left)
71. Rear turn signal light (right)
73. Front turn signal light (left)
74. Front turn signal light (right)
76. Handlebar switch (right)
77. Front brake light switch
80. Rear brake light switch
81. Tail/brake light

EAS30501

TROUBLESHOOTING

- Any of the following fail to light: a turn signal light, the brake light or an indicator light.
- The horn fails to sound.
- The fuel meter fails to come on.
- The speedometer fails to operate.

TIP

- Before troubleshooting, remove the following part(s):

1. Passenger seat
2. Center cover
3. Rider seat
4. Side panel assemblies
5. Fuel tank
6. Drive sprocket cover

1. Check the fuses. (Ignition, signaling system, and main) Refer to "CHECKING THE FUSES" on page 8-117.	NG →	Replace the fuse(s).
OK ↓		
2. Check the battery. Refer to "CHECKING AND CHARGING THE BATTERY" on page 8-118.	NG →	• Clean the battery terminals. • Recharge or replace the battery.
OK ↓		
3. Check the main switch. Refer to "CHECKING THE SWITCHES" on page 8-113.	NG →	Replace the main switch.
OK ↓		
4. Check the entire signaling system wiring. Refer to "CIRCUIT DIAGRAM" on page 8-21.	NG →	Properly connect or replace the wiring harness.
OK ↓		
Check the condition of each of the signaling system circuits. Refer to "Checking the signaling system".		

Checking the signaling system

The horn fails to sound.

1. Check the horn switch. Refer to "CHECKING THE SWITCHES" on page 8-113.	NG →	• The horn switch is faulty. • Replace the left handlebar switch.
OK ↓		

2. Check the entire signaling system wiring. Refer to “CIRCUIT DIAGRAM” on page 8-21.	NG →	Properly connect or replace the wiring harness.
OK ↓		
Replace the horn.		

The tail/brake light fails to come on.

1. Check the front brake light switch. Refer to “CHECKING THE SWITCHES” on page 8-113.	NG →	Replace the front brake light switch.
OK ↓		
2. Check the rear brake light switch. Refer to “CHECKING THE SWITCHES” on page 8-113.	NG →	Replace the rear brake light switch.
OK ↓		
3. Check the entire signaling system wiring. Refer to “CIRCUIT DIAGRAM” on page 8-21.	NG →	Properly connect or replace the wiring harness.
OK ↓		
Replace the tail/brake light.		

The turn signal light, turn signal indicator light or both fail to blink.

1. Check the turn signal light bulbs and sockets. Refer to “CHECKING THE BULBS AND BULB SOCKETS” on page 8-116.	NG →	Replace the turn signal light bulb, socket or both.
OK ↓		
2. Check the turn signal switch. Refer to “CHECKING THE SWITCHES” on page 8-113.	NG →	• The turn signal switch is faulty. • Replace the left handlebar switch.
OK ↓		
3. Check the turn signal relay. Refer to “CHECKING THE RELAYS” on page 8-121.	NG →	Replace the turn signal relay.
OK ↓		

4. Check the entire signaling system wiring. Refer to “CIRCUIT DIAGRAM” on page 8-21.	NG →	Properly connect or replace the wiring harness.
OK ↓		
Replace the meter assembly.		

The neutral indicator light fails to come on.

1. Check the gear position switch. Refer to “CHECKING THE GEAR POSITION SWITCH” on page 8-129.	NG →	Replace the gear position switch.
OK ↓		
2. Check the entire signaling system wiring. Refer to “CIRCUIT DIAGRAM” on page 8-21.	NG →	Properly connect or replace the wiring harness.
OK ↓		
Replace the meter assembly.		

The oil pressure warning light fails to come on when the main switch is set to “ON”.

1. Check the entire signaling system wiring. Refer to “CIRCUIT DIAGRAM” on page 8-21.	NG →	Properly connect or replace the wiring harness
OK ↓		
2. Disconnect the oil pressure switch lead from the oil pressure switch, and then check whether the oil pressure warning light comes on when the lead is connected to the engine ground.	NG →	Replace the meter assembly.
OK ↓		
Replace the oil pressure switch.		

The oil pressure warning light remains on after the engine is started.

1. Check the entire signaling system wiring. Refer to “CIRCUIT DIAGRAM” on page 8-21.	NG →	Properly connect or replace the wiring harness.
OK ↓		

2. Check the engine oil pressure. Refer to “CHANGING THE ENGINE OIL” on page 3-22.	NG →	Check the engine oil leakage, oil viscosity, oil seal, oil filter, or oil pump.
OK ↓		
Replace the oil pressure switch.		

The fuel meter fails to come on.

1. Check the fuel sender. Refer to “CHECKING THE FUEL SENDER” on page 8-127.	NG →	Replace the fuel pump assembly.
OK ↓		
2. Check the entire signaling system wiring. Refer to “CIRCUIT DIAGRAM” on page 8-21.	NG →	Properly connect or replace the wiring harness.
OK ↓		
Replace the meter assembly.		

The coolant temperature meter fails to come on.

1. Check the coolant temperature sensor. Refer to “CHECKING THE COOLANT TEMPERATURE SENSOR” on page 8-128.	NG →	Replace the coolant temperature sensor.
OK ↓		
2. Check the entire signaling system wiring. Refer to “CIRCUIT DIAGRAM” on page 8-21.	NG →	Properly connect or replace the wiring harness.
OK ↓		
Replace the ECU or meter assembly. Refer to “REPLACING THE ECU (engine control unit)” on page 8-117.		

The speedometer fails to operate.

1. Check the rear wheel sensor. Refer to “CHECKING THE REAR WHEEL” on page 4-30.	NG →	Replace the rear wheel sensor.
OK ↓		

2. Check the entire rear wheel sensor wiring. Refer to “CIRCUIT DIAGRAM” on page 8-21.	NG →	Properly connect or replace the wiring harness.
OK ↓		
Replace the ECU or meter assembly. Refer to “REPLACING THE ECU (engine control unit)” on page 8-117.		

The shift timing indicator light fails to come on.

1. Check that the shift timing indicator light is set to come on and that the brightness level of the light is adjusted properly. Refer to “MULTI-FUNCTION METER UNIT” on page 1-2.	NG →	Replace the meter assembly.
OK ↓		
2. Check the entire signaling system’s wiring. Refer to “CIRCUIT DIAGRAM” on page 8-21.	NG →	Properly connect or repair the signaling system’s wiring.
OK ↓		
Replace the meter assembly.		

EAS20077
COOLING SYSTEM

EAS30502
CIRCUIT DIAGRAM

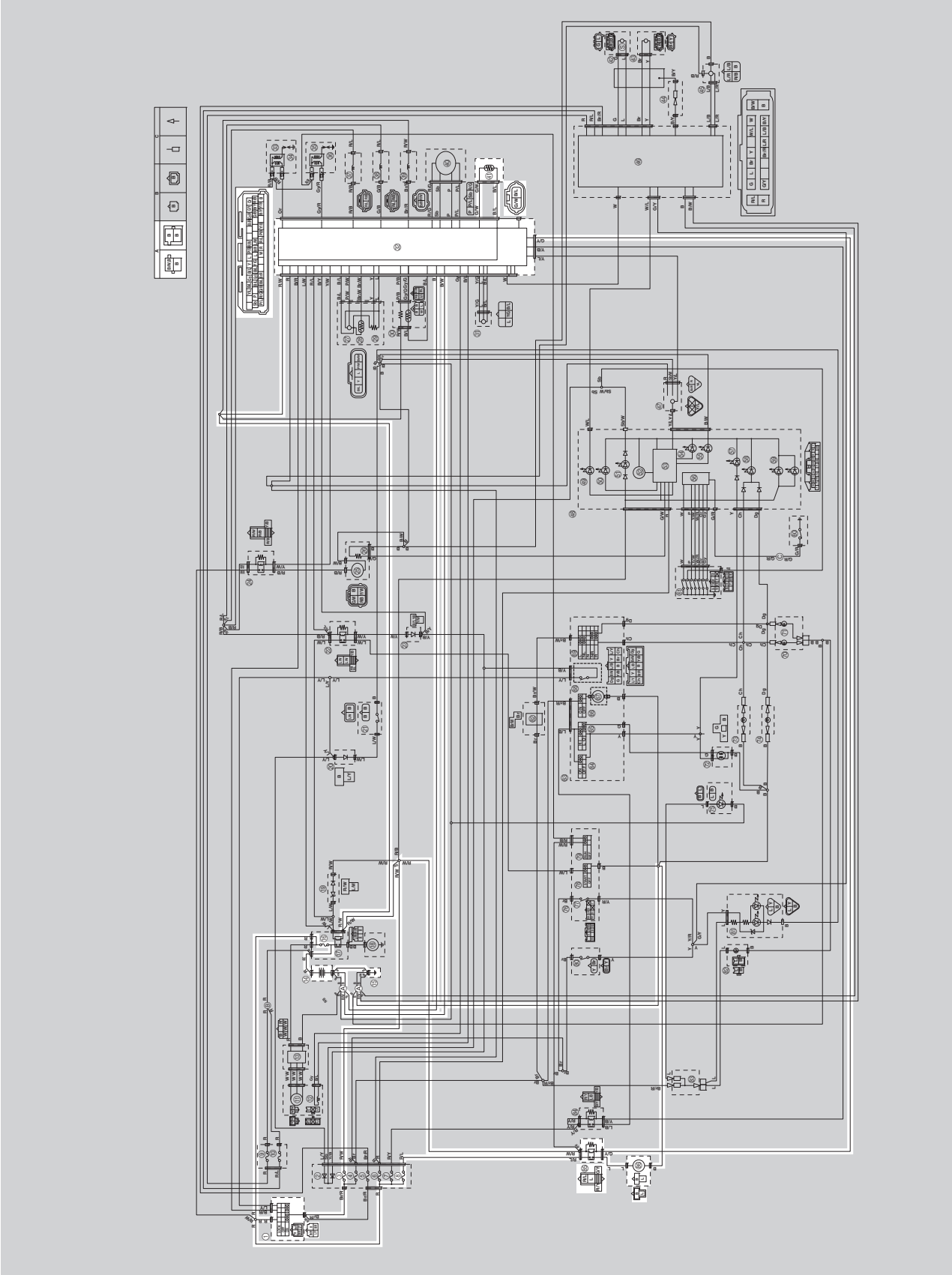

1. Main switch
3. Ignition fuse
8. Radiator fan motor fuse
14. Battery
15. Engine ground
16. Main fuse
32. ECU (Engine Control Unit)
41. Coolant temperature sensor
85. Radiator fan motor relay
86. Radiator fan motor

EAS30503

TROUBLESHOOTING

The radiator fan motor fails to turn.

TIP

- Before troubleshooting, remove the following part(s):

1. Passenger seat
2. Center cover
3. Rider seat
4. Side panel assemblies
5. Fuel tank

1. Check the fuses. (Ignition, radiator fan motor, and main) Refer to "CHECKING THE FUSES" on page 8-117.	NG →	Replace the fuse(s).
OK ↓		
2. Check the battery. Refer to "CHECKING AND CHARGING THE BATTERY" on page 8-118.	NG →	• Clean the battery terminals. • Recharge or replace the battery.
OK ↓		
3. Check the main switch. Refer to "CHECKING THE SWITCHES" on page 8-113.	NG →	Replace the main switch.
OK ↓		
4. Check the radiator fan motor. Refer to "CHECKING THE RADIATOR FAN MOTOR" on page 8-128.	NG →	Replace the radiator fan motor.
OK ↓		
5. Check the radiator fan motor relay. Refer to "CHECKING THE RELAYS" on page 8-121.	NG →	Replace the radiator fan motor relay.
OK ↓		
6. Check the coolant temperature sensor. Refer to "CHECKING THE COOLANT TEMPERATURE SENSOR" on page 8-128.	NG →	Replace the coolant temperature sensor.
OK ↓		

7. Check the entire cooling system wiring.
   Refer to “CIRCUIT DIAGRAM” on page 8-29.

NG →

Properly connect or replace the wiring harness.

OK ↓

Replace the ECU. Refer to “REPLACING THE ECU (engine control unit)” on page 8-117.

EAS20078
FUEL INJECTION SYSTEM

EAS30504
CIRCUIT DIAGRAM

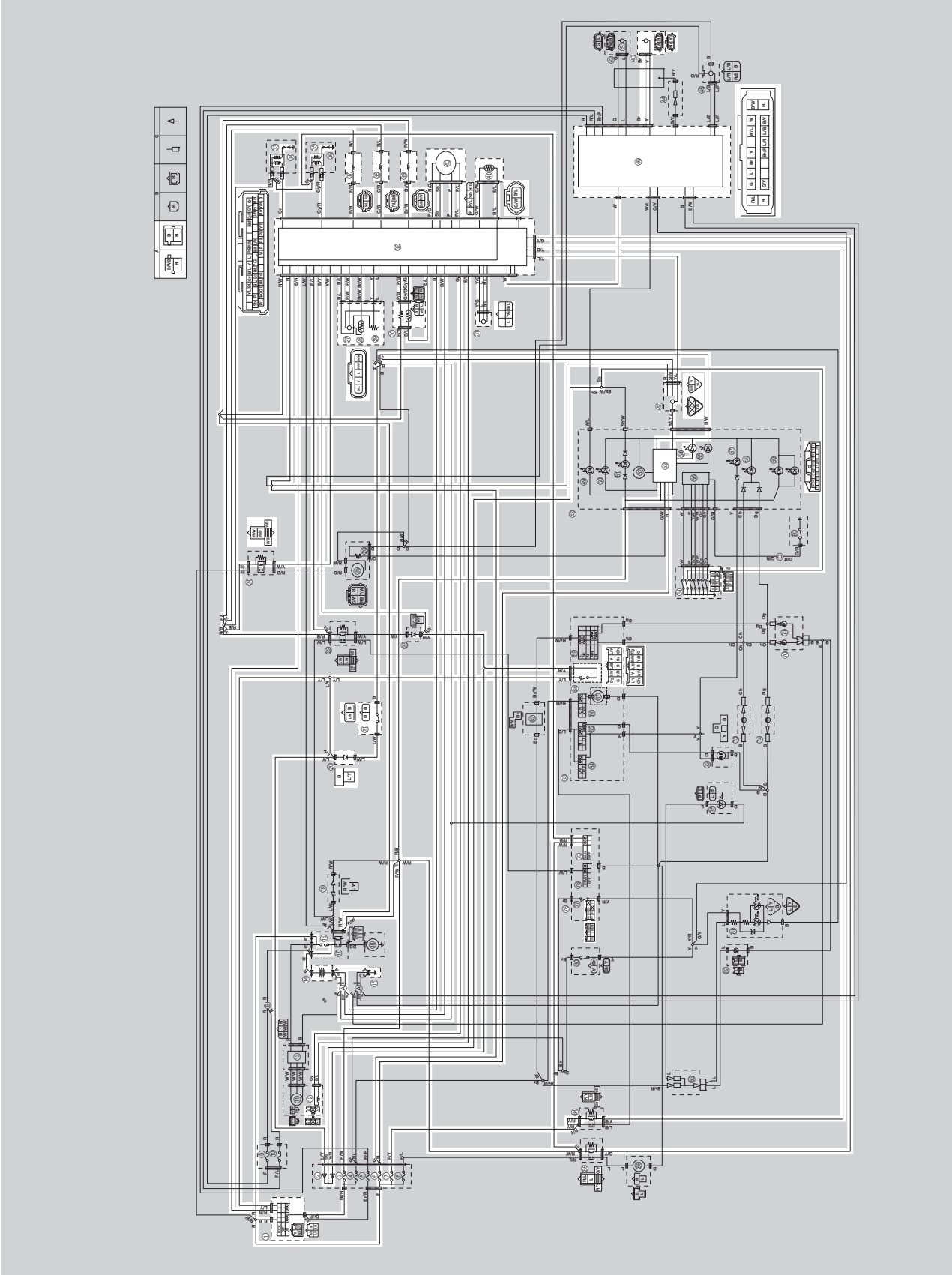

1. Main switch
2. Diode 1
3. Ignition fuse
6. Backup fuse
7. Headlight fuse
12. Crankshaft position sensor
14. Battery
15. Engine ground
16. Main fuse
20. Diode 3
21. Sidestand switch
24. Fuel pump relay
27. Intake air pressure sensor
28. Intake air temperature sensor
29. Throttle position sensor
30. O_2 sensor
31. Lean angle sensor
32. ECU (Engine Control Unit)
33. Ignition coil #1
34. Spark plug #1
35. Ignition coil #2
36. Spark plug #2
37. Fuel injector #1
38. Fuel injector #2
39. Air induction system solenoid
40. ISC (Idle Speed Control) unit
41. Coolant temperature sensor
43. Rear wheel sensor
46. ABS ECU
47. Yamaha diagnostic tool coupler
48. Meter assembly
53. Multi-function meter 1
54. Engine trouble warning light
61. Gear position switch
68. Clutch switch
76. Handlebar switch (right)
79. Engine stop switch
84. Headlight relay
85. Radiator fan motor relay

EAS30505

ECU SELF-DIAGNOSTIC FUNCTION

The ECU is equipped with a self-diagnostic function in order to ensure that the fuel injection system is operating normally. If this function detects a malfunction in the system, it immediately operates the engine under substitute characteristics and illuminates the engine trouble warning light to alert the rider that a malfunction has occurred in the system. Once a malfunction has been detected, a fault code number is stored in the memory of the ECU.

- To inform the rider that the fuel injection system is not functioning, the engine trouble warning light flashes while the start switch is being pushed to start the engine.
- If a malfunction is detected in the system by the self-diagnostic function, the ECU provides an appropriate substitute characteristic operation, and alerts the rider of the detected malfunction by illuminating the engine trouble warning light.
- After the engine has been stopped, the lowest fault code number appears on the meter display. This number remains stored in the memory of the ECU until it is deleted.

Engine trouble warning light indication and fuel injection system operation

Warning light indication	ECU operation	Fuel injection operation	Vehicle operation
Flashing*	Warning provided when unable to start engine	Operation stopped	Cannot be operated
Remains on	Malfunction detected	Operated with substitute characteristics in accordance with the description of the malfunction	Can or cannot be operated depending on the fault code

* The warning light flashes when any one of the following conditions is present and the start switch is pushed:

12:	Crankshaft position sensor	41:	Lean angle sensor (open or short circuit)
19:	Sidestand switch (open circuit in the wire to the ECU)	50:	ECU internal malfunction (memory check error)
30:	Lean angle sensor (latch up detected)		

Checking the engine trouble warning light

The engine trouble warning light comes on for around 2 seconds after the main switch has been set to "ON" and it comes on while the start switch is being pushed. If the warning light does not come on under these conditions, the warning light (LED) may be defective.

ECU detects an abnormal signal from a sensor

If the ECU detects an abnormal signal from a sensor while the vehicle is being driven, the ECU illuminates the engine trouble warning light and provides the engine with alternate operating instructions that are appropriate for the type of malfunction.
When an abnormal signal is received from a sensor, the ECU processes the specified values that are programmed for each sensor in order to provide the engine with alternate operating instructions that enable the engine to continue operating or stop operating, depending on the conditions.

EAS30506

TROUBLESHOOTING METHOD

The engine operation is not normal and the engine trouble warning light comes on.

1. Check:
   - Fault code number

▼▼

a. Check the fault code number displayed on the meter.

b. Identify the faulty system with the fault code number.
c. Identify the probable cause of the malfunction.

▲▲▲

2. Check and repair the probable cause of the malfunction.

Fault code No.	No fault code No.
Check and repair. Refer to “TROUBLESHOOTING DETAILS” on page 8-39. Monitor the operation of the sensors and actuators in the diagnostic mode. Refer to “TROUBLESHOOTING DETAILS” on page 8-39 and “SELF-DIAGNOSTIC FUNCTION AND DIAGNOSTIC CODE TABLE” on page 9-5.	Check and repair.

3. Perform the reinstatement action for the fuel injection system.
   Refer to “Confirmation of service completion” in the appropriate table in “TROUBLESHOOTING DETAILS” on page 8-39.
4. Set the main switch to “OFF”, then to “ON” again, and then check that no fault code number is displayed.

TIP

If another fault code number is displayed, repeat steps (1) to (4) until no fault code number is displayed.

5. Erase the malfunction history in the diagnostic mode. Refer to “Sensor operation table (Diagnostic code No. 62)”.

TIP

Turning the main switch to “OFF” will not erase the malfunction history.

The engine operation is not normal, but the engine trouble warning light does not come on.

1. Check the operation of the following sensors and actuators in the diagnostic mode. Refer to “TROUBLESHOOTING DETAILS” on page 8-39.

01: Throttle position sensor signal (throttle angle) 30: Cylinder-#1 ignition coil 31: Cylinder-#2 ignition coil 36: Fuel injector #1 37: Fuel injector #2

   If a malfunction is detected in the sensors or actuators, repair or replace all faulty parts.
   If no malfunction is detected in the sensors and actuators, check and repair the inner parts of the engine.

EAS30951

YAMAHA DIAGNOSTIC TOOL

This model uses the Yamaha diagnostic tool to identify malfunctions.
For information about using the Yamaha diagnostic tool, refer to the operation manual that is included with the tool.

Yamaha diagnostic tool
90890-03231

<u>Features of the Yamaha diagnostic tool</u>

You can use the Yamaha diagnostic tool to identify malfunctions quicker than with conventional methods.
By connecting the adapter interface, which is connected to the USB port of a computer, to a vehicle’s ECU using the communication cable, you can display information that is necessary for identifying malfunctions and for maintenance to display on the computer. The displayed information includes the sensor output data and information recorded in the ECU.

Functions of the Yamaha diagnostic tool

Fault diagnosis mode:	Fault codes recorded on the ECU are read, and the contents are displayed.
Function diagnostic mode:	Check the operation of the output value of each sensor and actuator.
Inspection mode:	Determine whether each sensor or actuator is functioning properly.
CO adjustment mode:	Adjust the concentration of CO admissions during idling.
Monitoring mode:	Displays a graph of sensor output values for actual operating conditions.
Logging mode:	Records and saves the sensor output value in actual driving conditions.
View log:	Displays the logging data.
ECU rewrite:	If necessary, the ECU is rewritten using ECU rewrite data provided by Yamaha. Ignition timing adjustment, etc. cannot be changed from the vehicle's original state.

However, the Diagnostic Tool cannot be used to freely change the basic vehicle functions, such as adjusting the ignition timing.

Connecting the Yamaha diagnostic tool

Disconnect the Yamaha diagnostic tool coupler "1", and then connect the Yamaha diagnostic tool "2" to the coupler.

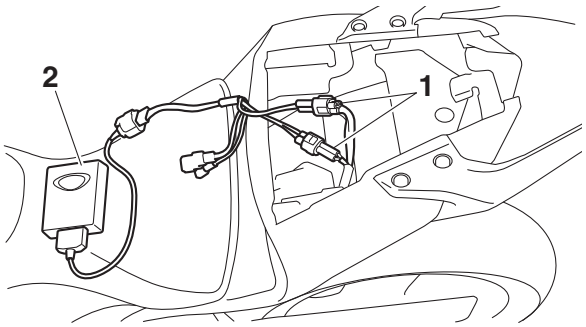

TIP

When the Yamaha diagnostic tool is connected to the vehicle, "Er-1" or "Er-4" will be displayed on the multi-function meter.

Operation of the Yamaha diagnostic tool (Malfunction mode)

Malfunction results are displayed in the top part of the window area.

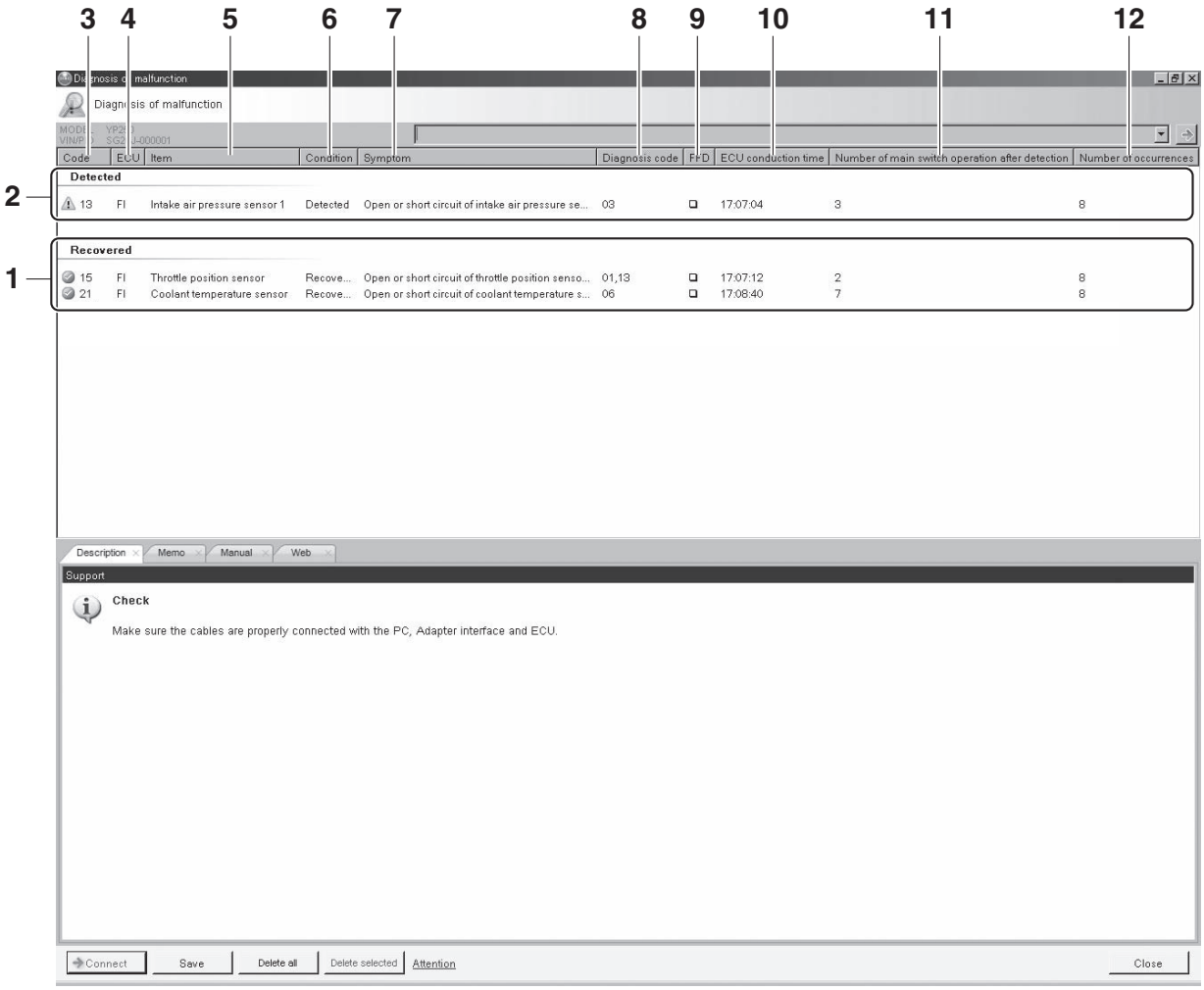

1. Recovered
   The item list of the malfunction detected in the past (already recovered) are displayed.
2. Detected
   The item list of the malfunction currently occurred are displayed.
3. Code
   The following icons and the fault code numbers for the detected malfunctions are displayed.

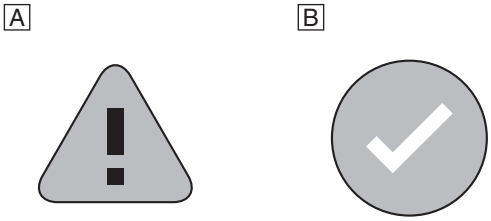

A. Detected malfunction
B. Recovered malfunction

4. ECU
   The types of the control units are displayed.
5. Item
   The item names of the detected malfunction are displayed.

6. Condition
   The current conditions are displayed. (Detected/Recovered)
7. Symptom
   The symptoms of the detected malfunction are displayed.
8. Diagnosis code
   The diagnosis codes related to the detected malfunction are displayed.
9. FFD (only for models that can display freeze frame data)
   The mark "❑" is displayed when the freeze frame data is available.
10. ECU conduction time (hour: minute: second)
    The total ECU conduction time (total hours the vehicle's main switch was ON) when the malfunction was detected is displayed.
11. Number of main switch operation after detection
    The number of times the main switch was turned on between the malfunction detection and code reading is displayed.
12. Number of occurrences
    The number of malfunction occurrences between the malfunction detection and code reading is displayed.

EAS30508

TROUBLESHOOTING DETAILS

This section describes the measures per fault code number displayed on the meter. Check and service the items or components that are the probable cause of the malfunction following the order given. After the check and service of the malfunctioning part have been completed, reset the meter display according to the reinstatement method.
Fault code No.:
Fault code number displayed on the meter when the engine failed to work normally.
Diagnostic code No.:
Diagnostic code number to be used when the diagnostic mode is operated. Refer to "SELF-DIAGNOSTIC FUNCTION AND DIAGNOSTIC CODE TABLE" on page 9-5.

Fault code No. 12

Fault code No.	**12**
Item	**Crankshaft position sensor: no normal signals are received from the crankshaft position sensor.**
Fail-safe system	Unable to start engine
	Unable to drive vehicle
Diagnostic code No.	—
Tool display	—
Procedure	—

Item	Probable cause of malfunction and check	Maintenance job	Confirmation of service completion
1	Connection of crankshaft position sensor coupler. Check the locking condition of the coupler. Disconnect the coupler and check the pins (bent or broken terminals and locking condition of the pins).	Improperly connected → Connect the coupler securely or replace the wire harness.	Crank the engine. Fault code number is not displayed → Service is finished. Fault code number is displayed → Go to item 2.

Fault code No.	12		
Item	Crankshaft position sensor: no normal signals are received from the crankshaft position sensor.		
2	Connection of ECU coupler. Check the locking condition of the coupler. Disconnect the coupler and check the pins (bent or broken terminals and locking condition of the pins).	Improperly connected → Connect the coupler securely or replace the wire harness.	Crank the engine. Fault code number is not displayed → Service is finished. Fault code number is displayed → Go to item 3.
3	Wire harness continuity.	Open or short circuit → Replace the wire harness. Between crankshaft position sensor coupler and ECU coupler. gray–gray Between crankshaft position sensor coupler and ECU coupler. black/blue–black/blue	Crank the engine. Fault code number is not displayed → Service is finished. Fault code number is displayed → Go to item 4.
4	Installed condition of crankshaft position sensor. Check for looseness or pinching.	Improperly installed sensor → Reinstall or replace the sensor. Refer to "GENERATOR AND STARTER CLUTCH" on page 5-41.	Crank the engine. Fault code number is not displayed → Service is finished. Fault code number is displayed → Go to item 5.
5	Defective crankshaft position sensor.	Check the crankshaft position sensor. Refer to "CHECKING THE CRANKSHAFT POSITION SENSOR" on page 8-125. Replace if defective.	Crank the engine. Fault code number is not displayed → Service is finished. Fault code number is displayed → Go to item 6.
6	Malfunction in ECU.	Replace the ECU. Refer to "REPLACING THE ECU (engine control unit)" on page 8-117.	

Fault code No. 13

ECA20500

NOTICE

Do not remove the throttle body sensor assembly from the throttle body.

TIP

If fault code numbers "13" and "14" are both indicated, take the actions specified for fault code number "13" first.

Fault code No.	13
Item	Intake air pressure sensor: open or short circuit detected.
Fail-safe system	Able to start engine
	Able to drive vehicle
Diagnostic code No.	03
Tool display	Displays the intake air pressure.
Procedure	Set the engine stop switch to "◯", and then operate the throttle while pushing the start switch "⊛". (If the display value changes, the performance is OK.)

Fault code No.	13		
Item	Intake air pressure sensor: open or short circuit detected.		
Item	**Probable cause of malfunction and check**	**Maintenance job**	**Confirmation of service completion**
1	Connection of intake air pressure sensor coupler. Check the locking condition of the coupler. Disconnect the coupler and check the pins (bent or broken terminals and locking condition of the pins).	Improperly connected → Connect the coupler securely or replace the wire harness.	Turn the main switch to “ON”. Fault code number is not displayed → Service is finished. Fault code number is displayed → Go to item 2.
2	Connection of ECU coupler. Check the locking condition of the coupler. Disconnect the coupler and check the pins (bent or broken terminals and locking condition of the pins).	Improperly connected → Connect the coupler securely or replace the wire harness.	Turn the main switch to “ON”. Fault code number is not displayed → Service is finished. Fault code number is displayed → Go to item 3.
3	Wire harness continuity.	Open or short circuit → Replace the wire harness. Between throttle body sensor assembly coupler and ECU coupler. black/blue–black/blue pink/white–pink/white blue–blue	Turn the main switch to “ON”. Fault code number is not displayed → Service is finished. Fault code number is displayed → Go to item 4.
4	Installed condition of throttle body sensor assembly. Check for looseness or pinching.	Check for looseness or pinching. Improperly installed sensor → Replace the throttle bodies. Refer to “CHECKING THE THROTTLE BODIES AND ISC (IDLE SPEED CONTROL) UNIT” on page 7-8.	Turn the main switch to “ON”. Fault code number is not displayed → Service is finished. Fault code number is displayed → Go to item 5.

Fault code No.		13	
Item		**Intake air pressure sensor: open or short circuit detected.**	
5	Defective intake air pressure sensor.	Execute the diagnostic mode. (Code No. 03) When engine is stopped: Atmospheric pressure at the current altitude and weather conditions is indicated. At sea level: Approx. 101 kPa (757.6 mmHg, 29.8 inHg) 1000 m (3300 ft) above sea level: Approx. 90 kPa (675.1 mmHg, 26.6 inHg) 2000 m (6700 ft) above sea level: Approx. 80 kPa (600.0 mmHg, 23.6 inHg) 3000 m (9800 ft) above sea level: Approx. 70 kPa (525.0 mmHg, 20.7 inHg) When engine is cranking: Make sure that the indication value changes. The value does not change when engine is cranking. → Replace the throttle bodies if defective.	Turn the main switch to “ON”. Fault code number is not displayed → Service is finished. Fault code number is displayed → Go to item 6.
6	Malfunction in ECU.	Replace the ECU. Refer to “REPLACING THE ECU (engine control unit)” on page 8-117.	

Fault code No. 14

ECA20500

NOTICE

Do not remove the throttle body sensor assembly from the throttle body.

TIP

If fault code numbers “13” and “14” are both indicated, take the actions specified for fault code number “13” first.

Fault code No.		14	
Item		**Intake air pressure sensor: hose system malfunction (clogged hole or loose).**	
Fail-safe system		Able to start engine	
		Able to drive vehicle	
Diagnostic code No.		03	
Tool display		Displays the intake air pressure.	
Procedure		Set the engine stop switch to “◯”, and then operate the throttle while pushing the start switch “⊛”. (If the display value changes, the performance is OK.)	
Item	**Probable cause of malfunction and check**	**Maintenance job**	**Confirmation of service completion**

Fault code No.		14	
Item		Intake air pressure sensor: hose system malfunction (clogged hole or loose).	
1	Installed condition of sensor.	Check the mounting section for loose or pinched mounting.	Start the engine and let it idle for approximately 5 seconds. Fault code number is not displayed → Service is finished. Fault code number is displayed → Go to item 2.
2	Defective intake air pressure sensor.	Execute the diagnostic mode. (Code No. 03) When engine is stopped: Atmospheric pressure at the current altitude and weather conditions is indicated. At sea level: Approx. 101 kPa (757.6 mmHg, 29.8 inHg) 1000 m (3300 ft) above sea level: Approx. 90 kPa (675.1 mmHg, 26.6 inHg) 2000 m (6700 ft) above sea level: Approx. 80 kPa (600.0 mmHg, 23.6 inHg) 3000 m (9800 ft) above sea level: Approx. 70 kPa (525.0 mmHg, 20.7 inHg) When engine is cranking: Make sure that the indication value changes. The value does not change when engine is cranking. → Replace the throttle bodies if defective. Refer to “CHECKING THE THROTTLE BODIES AND ISC (IDLE SPEED CONTROL) UNIT” on page 7-8.	

Fault code No. 15

ECA20500

NOTICE

Do not remove the throttle body sensor assembly from the throttle body.

Fault code No.		15	
Item		Throttle position sensor: open or short circuit detected.	
Fail-safe system		Able to start engine	
		Able to drive vehicle	
Diagnostic code No.		01	
Tool display		Throttle position sensor signal • 14–20 (fully closed position) • 97–107 (fully open position)	
Procedure		• Check with throttle valves fully closed. • Check with throttle valves fully open.	
Item	Probable cause of malfunction and check	Maintenance job	Confirmation of service completion

Fault code No.		15	
Item		**Throttle position sensor: open or short circuit detected.**	
1	Connection of throttle position sensor coupler. Check the locking condition of the coupler. Disconnect the coupler and check the pins (bent or broken terminals and locking condition of the pins).	Improperly connected → Connect the coupler securely or replace the wire harness.	Turn the main switch to “ON”. Fault code number is not displayed → Service is finished. Fault code number is displayed → Go to item 2.
2	Connection of ECU coupler. Check the locking condition of the coupler. Disconnect the coupler and check the pins (bent or broken terminals and locking condition of the pins).	Improperly connected → Connect the coupler securely or replace the wire harness.	Turn the main switch to “ON”. Fault code number is not displayed → Service is finished. Fault code number is displayed → Go to item 3.
3	Wire harness continuity.	Open or short circuit → Replace the wire harness. Between throttle body sensor assembly coupler and ECU coupler. black/blue–black/blue yellow–yellow blue–blue	Turn the main switch to “ON”. Fault code number is not displayed → Service is finished. Fault code number is displayed → Go to item 4.
4	Installed condition of throttle body sensor assembly. Check for looseness or pinching.	Check for looseness or pinching. Improperly installed sensor → Replace the throttle bodies. Refer to “CHECKING THE THROTTLE BODIES AND ISC (IDLE SPEED CONTROL) UNIT” on page 7-8.	Turn the main switch to “ON”. Fault code number is not displayed → Service is finished. Fault code number is displayed → Go to item 5.
5	Defective throttle position sensor.	Check throttle position sensor signal. Execute the diagnostic mode. (Code No. 01) When the throttle valves are fully closed: A value of 14–20 is indicated. When throttle valves are fully open: A value of 97–107 is indicated. An indicated value is out of the specified range → Replace the throttle bodies if defective. Refer to “CHECKING THE THROTTLE BODIES AND ISC (IDLE SPEED CONTROL) UNIT” on page 7-8.	Turn the main switch to “ON”. Fault code number is not displayed → Service is finished. Fault code number is displayed → Go to item 6.
6	Malfunction in ECU.	Replace the ECU. Refer to “REPLACING THE ECU (engine control unit)” on page 8-117.	

Fault code No. 16

ECA20500

NOTICE

Do not remove the throttle body sensor assembly from the throttle body.

Fault code No.	**16**
Item	**Throttle position sensor: stuck throttle position sensor is detected. (signal from throttle position sensor will not change)**
Fail-safe system	Able to start engine
	Able to drive vehicle
Diagnostic code No.	01
Tool display	Throttle position sensor signal • 14–20 (fully closed position) • 97–107 (fully open position)
Procedure	• Check with throttle valves fully closed. • Check with throttle valves fully open.

Item	Probable cause of malfunction and check	Maintenance job	Confirmation of service completion
1	Installed condition of throttle body sensor assembly.	Check for loose mounting, pinched mounting, or hard mounting. Make sure that the mounting position is correct.	Turn the main switch to “ON” and then open and close the throttle valves. Fault code number is not displayed → Service is finished. Fault code number is displayed → Go to item 2.
2	Defective throttle position sensor.	Execute the diagnostic mode. (Code No. 01) When the throttle valves are fully closed: A value of 14–20 is indicated. When throttle valves are fully open: A value of 97–107 is indicated. An indicated value is out of the specified range → Replace the throttle bodies. Refer to “CHECKING THE THROTTLE BODIES AND ISC (IDLE SPEED CONTROL) UNIT” on page 7-8.	Turn the main switch to “ON” and then open and close the throttle valves. Fault code number is not displayed → Service is finished. Fault code number is displayed → Go to item 3.
3	Malfunction in ECU.	Replace the ECU. Refer to “REPLACING THE ECU (engine control unit)” on page 8-117.	

Fault code No. 19

Fault code No.	**19**
Item	**Sidestand switch: a break or disconnection of the black/red lead of the ECU is detected.**
Fail-safe system	Unable to start engine
	Unable to drive vehicle
Diagnostic code No.	20

Fault code No.	**19**
Item	**Sidestand switch: a break or disconnection of the black/red lead of the ECU is detected.**
Tool display	Sidestand switch • “ON” (normal signal) • “OFF” (abnormal signal)
Procedure	Extend and retract the sidestand (with the transmission in gear)

Item	Probable cause of malfunction and check	Maintenance job	Confirmation of service completion
1	Connection of sidestand switch coupler. Check the locking condition of the coupler. Disconnect the coupler and check the pins (bent or broken terminals and locking condition of the pins).	Improperly connected → Connect the coupler securely or replace the wire harness.	Turn the main switch to “ON”, and then extend and retract the sidestand. Fault code number is not displayed → Service is finished. Fault code number is displayed → Go to item 2.
2	Connection of ECU coupler. Check the locking condition of the coupler. Disconnect the coupler and check the pins (bent or broken terminals and locking condition of the pins).	Improperly connected → Connect the coupler securely or replace the wire harness.	Turn the main switch to “ON”. Fault code number is not displayed → Service is finished. Fault code number is displayed → Go to item 3.
3	Connection of main switch coupler. Check the locking condition of the coupler. Disconnect the coupler and check the pins (bent or broken terminals and locking condition of the pins).	Improperly connected → Connect the coupler securely or replace the wire harness.	Turn the main switch to “ON”. Fault code number is not displayed → Service is finished. Fault code number is displayed → Go to item 4.
4	Wire harness continuity.	Open or short circuit → Replace the wire harness. Between ECU coupler and main switch coupler. black/red–black/red Between main switch coupler and diode 3 coupler. blue/yellow–blue/yellow Between diode 3 coupler and side stand switch. blue/white–blue/white Between sidestand switch to ground. black–black	Turn the main switch to “ON”. Fault code number is not displayed → Service is finished. Fault code number is displayed → Go to item 5.
5	Defective sidestand switch.	Execute the diagnostic mode. (Code No. 20) Shift the transmission into gear. Sidestand retracted: “ON” Sidestand extended: “OFF” Replace if defective.	Turn the main switch to “ON”, and then extend and retract the sidestand. Fault code number is not displayed → Service is finished. Fault code number is displayed → Go to item 6.
6	Malfunction in ECU.	Replace the ECU. Refer to “REPLACING THE ECU (engine control unit)” on page 8-117.	

Fault code No. 21

Fault code No.	**21**
Item	**Coolant temperature sensor: open or short circuit detected.**
Fail-safe system	Able to start engine
	Able to drive vehicle
Diagnostic code No.	06
Tool display	When engine is cold: Displays temperature closer to air temperature. When engine is hot: Displays current coolant temperature.
Procedure	Compare the actually measured coolant temperature with the meter display value.

Item	Probable cause of malfunction and check	Maintenance job	Confirmation of service completion
1	Connection of coolant temperature sensor coupler. Check the locking condition of the coupler. Disconnect the coupler and check the pins (bent or broken terminals and locking condition of the pins).	Improperly connected → Connect the coupler securely or replace the wire harness.	Turn the main switch to “ON”. Fault code number is not displayed → Service is finished. Fault code number is displayed → Go to item 2.
2	Connection of ECU coupler. Check the locking condition of the coupler. Disconnect the coupler and check the pins (bent or broken terminals and locking condition of the pins).	Improperly connected → Connect the coupler securely or replace the wire harness.	Turn the main switch to “ON”. Fault code number is not displayed → Service is finished. Fault code number is displayed → Go to item 3.
3	Wire harness continuity.	Open or short circuit → Replace the wire harness. Between coolant temperature sensor coupler and ECU coupler. green/white–green/white black/blue–black/blue	Turn the main switch to “ON”. Fault code number is not displayed → Service is finished. Fault code number is displayed → Go to item 4.
4	Installed condition of coolant temperature sensor. Check for looseness or pinching.	Improperly installed sensor → Reinstall or replace the sensor.	Turn the main switch to “ON”. Fault code number is not displayed → Service is finished. Fault code number is displayed → Go to item 5.
5	Defective coolant temperature sensor.	Execute the diagnostic mode. (Code No. 06) When engine is cold: Displayed temperature is close to the ambient temperature. The displayed temperature is not close to the ambient temperature → Check the coolant temperature sensor. Replace if defective. Refer to “CHECKING THE COOLANT TEMPERATURE SENSOR” on page 8-128.	Turn the main switch to “ON”. Fault code number is not displayed → Service is finished. Fault code number is displayed → Go to item 6.

Fault code No.		21	
Item		Coolant temperature sensor: open or short circuit detected.	
6	Malfunction in ECU.	Replace the ECU. Refer to “REPLACING THE ECU (engine control unit)” on page 8-117.	

Fault code No. 22

ECA20500

NOTICE

Do not remove the throttle body sensor assembly from the throttle body.

Fault code No.	22
Item	Intake air temperature sensor: open or short circuit detected.
Fail-safe system	Able to start engine
	Able to drive vehicle
Diagnostic code No.	05
Tool display	Displays the air temperature.
Procedure	Compare the actually measured air temperature with the meter display value.

Item	Probable cause of malfunction and check	Maintenance job	Confirmation of service completion
1	Connection of throttle body sensor assembly coupler. Check the locking condition of the coupler. Disconnect the coupler and check the pins (bent or broken terminals and locking condition of the pins).	Improperly connected → Connect the coupler securely or replace the wire harness.	Turn the main switch to “ON”. Fault code number is not displayed → Service is finished. Fault code number is displayed → Go to item 2.
2	Connection of ECU coupler. Check the locking condition of the coupler. Disconnect the coupler and check the pins (bent or broken terminals and locking condition of the pins).	Improperly connected → Connect the coupler securely or replace the wire harness.	Turn the main switch to “ON”. Fault code number is not displayed → Service is finished. Fault code number is displayed → Go to item 3.
3	Wire harness continuity.	Open or short circuit → Replace the wire harness. Between throttle body sensor assembly coupler and ECU coupler. black/blue–black/blue brown/white–brown/white	Turn the main switch to “ON”. Fault code number is not displayed → Service is finished. Fault code number is displayed → Go to item 4.
4	Installed condition of throttle body sensor assembly. Check for looseness or pinching.	Check for looseness or pinching. Improperly installed sensor → Replace the throttle bodies. Refer to “CHECKING THE THROTTLE BODIES AND ISC (IDLE SPEED CONTROL) UNIT” on page 7-8.	Turn the main switch to “ON”. Fault code number is not displayed → Service is finished. Fault code number is displayed → Go to item 5.

Fault code No.		22	
Item		**Intake air temperature sensor: open or short circuit detected.**	
5	Defective intake air temperature sensor.	Execute the diagnostic mode. (Code No. 05) When engine is cold: Displayed temperature is close to the ambient temperature. The displayed temperature is not close to the ambient temperature. → Replace the throttle bodies if defective. Refer to "CHECKING THE THROTTLE BODIES AND ISC (IDLE SPEED CONTROL) UNIT" on page 7-8.	Turn the main switch to "ON". Fault code number is not displayed → Service is finished. Fault code number is displayed → Go to item 6.
6	Malfunction in ECU.	Replace the ECU. Refer to "REPLACING THE ECU (engine control unit)" on page 8-117.	

Fault code No. 24

Fault code No.		24	
Item		**O_2 sensor: no normal signals are received from the O_2 sensor.**	
Fail-safe system		Able to start engine	
		Able to drive vehicle	
Diagnostic code No.		—	
Tool display		—	
Procedure		—	
Item	**Probable cause of malfunction and check**	**Maintenance job**	**Confirmation of service completion**
1	Installed condition of O_2 sensor.	Improperly installed sensor → Reinstall or replace the sensor.	Start the engine, warm it up, and then race it, or execute the diagnostic mode. (Code No. 63) Fault code number is not displayed → Service is finished. Fault code number is displayed → Go to item 2.
2	Connection of O_2 sensor coupler. Check the locking condition of the coupler. Disconnect the coupler and check the pins (bent or broken terminals and locking condition of the pins).	Improperly connected → Connect the coupler securely or replace the wire harness.	Start the engine, warm it up, and then race it, or execute the diagnostic mode. (Code No. 63) Fault code number is not displayed → Service is finished. Fault code number is displayed → Go to item 3.
3	Connection of ECU coupler. Check the locking condition of the coupler. Disconnect the coupler and check the pins (bent or broken terminals and locking condition of the pins).	Improperly connected → Connect the coupler securely or replace the wire harness.	Start the engine, warm it up, and then race it, or execute the diagnostic mode. (Code No. 63) Fault code number is not displayed → Service is finished. Fault code number is displayed → Go to item 4.

Fault code No.		24	
Item		**O_2 sensor: no normal signals are received from the O_2 sensor.**	
4	Wire harness continuity.	Open or short circuit → Replace the wire harness. Between O_2 sensor coupler and ECU coupler. gray/green–gray/green pink/black–pink/black black/blue–black/blue Between O_2 sensor coupler and starter relay coupler. red/white–red/white Between starter relay coupler and ignition fuse. red/white–red/white	Start the engine, warm it up, and then race it, or execute the diagnostic mode. (Code No. 63) Fault code number is not displayed → Service is finished. Fault code number is displayed → Go to item 5.
5	Check fuel pressure.	Refer to "CHECKING THE FUEL PRESSURE" on page 7-12.	Start the engine, warm it up, and then race it, or execute the diagnostic mode. (Code No. 63) Fault code number is not displayed → Service is finished. Fault code number is displayed → Go to item 6.
6	Defective O_2 sensor.	Check the O_2 sensor. Replace if defective. Refer to "ENGINE REMOVAL" on page 5-3.	Start the engine, warm it up, and then race it, or execute the diagnostic mode. (Code No. 63) Fault code number is not displayed → Service is finished. Fault code number is displayed → Go to item 7.
7	Malfunction in ECU.	Replace the ECU. Refer to "REPLACING THE ECU (engine control unit)" on page 8-117.	

Fault code No. 30

Fault code No.		30	
Item		**Latch up detected.**	
Fail-safe system		Unable to start engine	
		Unable to drive vehicle	
Diagnostic code No.		08	
Tool display		Lean angle sensor output voltage • 0.4–1.4 (upright) • 3.7–4.4 (overturned)	
Procedure		Remove the lean angle sensor and incline it more than 45 degrees.	
Item	**Probable cause of malfunction and check**	**Maintenance job**	**Confirmation of service completion**
1	The vehicle has overturned.	Raise the vehicle upright.	Turn the main switch to "ON", then to "OFF", and then back to "ON". Fault code number is not displayed → Service is finished. Fault code number is displayed → Go to item 2.

Fault code No.		30	
Item		**Latch up detected.**	
2	Installed condition of lean angle sensor.	Check the installed direction and condition of the sensor.	Turn the main switch to “ON”, then to “OFF”, and then back to “ON”. Fault code number is not displayed → Service is finished. Fault code number is displayed → Go to item 3.
3	Defective lean angle sensor.	Execute the diagnostic mode. (Code No. 08) Upright: 0.4–1.4 V Overturn: 3.7–4.4 V Replace if defective. Refer to “CHECKING THE LEAN ANGLE SENSOR” on page 8-125.	Turn the main switch to “ON”, then to “OFF”, and then back to “ON”. Fault code number is not displayed → Service is finished. Fault code number is displayed → Go to item 4.
4	Malfunction in ECU.	Replace the ECU. Refer to “REPLACING THE ECU (engine control unit)” on page 8-117.	

Fault code No. 33

Fault code No.		33	
Item		**Cylinder-#1 ignition coil: open or short circuit detected in the primary lead of the cylinder-#1 ignition coil.**	
Fail-safe system		Able to start engine (depending on the number of faulty cylinders)	
		Able to drive vehicle (depending on the number of faulty cylinders)	
Diagnostic code No.		30	
Actuation		Actuates the cylinder-#1 ignition coil five times at one-second intervals. The “CHECK” indicator and “ ” on the Yamaha diagnostic tool screen comes on each time the ignition coil is actuated.	
Procedure		Check that a spark is generated five times. • Connect an ignition checker.	
Item	**Probable cause of malfunction and check**	**Maintenance job**	**Confirmation of service completion**
1	Connection of cylinder-#1 ignition coil coupler. Check the locking condition of the coupler. Disconnect the coupler and check the pins (bent or broken terminals and locking condition of the pins).	Improperly connected → Connect the coupler securely or replace the wire harness.	Start the engine and let it idle for approximately 5 seconds. Fault code number is not displayed → Service is finished. Fault code number is displayed → Go to item 2.
2	Connection of ECU coupler. Check the locking condition of the coupler. Disconnect the coupler and check the pins (bent or broken terminals and locking condition of the pins).	Improperly connected → Connect the coupler securely or replace the wire harness.	Start the engine and let it idle for approximately 5 seconds. Fault code number is not displayed → Service is finished. Fault code number is displayed → Go to item 3.

Fault code No.		33	
Item		**Cylinder-#1 ignition coil: open or short circuit detected in the primary lead of the cylinder-#1 ignition coil.**	
3	Wire harness continuity.	Open or short circuit → Replace the wire harness. Between cylinder-#1 ignition coil connector and ECU coupler. orange–orange	Start the engine and let it idle for approximately 5 seconds. Fault code number is not displayed → Service is finished. Fault code number is displayed → Go to item 4.
4	Installed condition of cylinder-#1 ignition coil. Check for looseness or pinching.	Improperly installed ignition coil → Reinstall or replace the ignition coil.	Start the engine and let it idle for approximately 5 seconds. Fault code number is not displayed → Service is finished. Fault code number is displayed → Go to item 5.
5	Defective cylinder-#1 ignition coil.	Measure the primary coil resistance of the cylinder-#1 ignition coil. Replace if out of specification. Refer to “CHECKING THE IGNITION COILS” on page 8-124.	Start the engine and let it idle for approximately 5 seconds. Fault code number is not displayed → Service is finished. Fault code number is displayed → Go to item 6.
6	Malfunction in ECU.	Execute the diagnostic mode. (Code No. 30) No spark → Replace the ECU. Refer to “REPLACING THE ECU (engine control unit)” on page 8-117.	

Fault code No. 34

Fault code No.		34	
Item		**Cylinder-#2 ignition coil: open or short circuit detected in the primary lead of the cylinder-#2 ignition coil.**	
Fail-safe system		Able to start engine (depending on the number of faulty cylinders)	
		Able to drive vehicle (depending on the number of faulty cylinders)	
Diagnostic code No.		31	
Actuation		Actuates the cylinder-#2 ignition coil five times at one-second intervals. The “CHECK” indicator and “ ” on the Yamaha diagnostic tool screen comes on each time the ignition coil is actuated.	
Procedure		Check that a spark is generated five times. • Connect an ignition checker.	
Item	**Probable cause of malfunction and check**	**Maintenance job**	**Confirmation of service completion**
1	Connection of cylinder-#2 ignition coil coupler. Check the locking condition of the coupler. Disconnect the coupler and check the pins (bent or broken terminals and locking condition of the pins).	Improperly connected → Connect the coupler securely or replace the wire harness.	Start the engine and let it idle for approximately 5 seconds. Fault code number is not displayed → Service is finished. Fault code number is displayed → Go to item 2.

Fault code No.		34	
Item		**Cylinder-#2 ignition coil: open or short circuit detected in the primary lead of the cylinder-#2 ignition coil.**	
2	Connection of ECU coupler. Check the locking condition of the coupler. Disconnect the coupler and check the pins (bent or broken terminals and locking condition of the pins).	Improperly connected → Connect the coupler securely or replace the wire harness.	Start the engine and let it idle for approximately 5 seconds. Fault code number is not displayed → Service is finished. Fault code number is displayed → Go to item 3.
3	Wire harness continuity.	Open or short circuit → Replace the wire harness. Between cylinder-#2 ignition coil connector and ECU coupler. gray/red–gray/red	Start the engine and let it idle for approximately 5 seconds. Fault code number is not displayed → Service is finished. Fault code number is displayed → Go to item 4.
4	Installed condition of cylinder-#2 ignition coil. Check for looseness or pinching.	Improperly installed ignition coil → Reinstall or replace the ignition coil.	Start the engine and let it idle for approximately 5 seconds. Fault code number is not displayed → Service is finished. Fault code number is displayed → Go to item 5.
5	Defective cylinder-#2 ignition coil.	Measure the primary coil resistance of the cylinder-#2 ignition coil. Replace if out of specification. Refer to “CHECKING THE IGNITION COILS” on page 8-124.	Start the engine and let it idle for approximately 5 seconds. Fault code number is not displayed → Service is finished. Fault code number is displayed → Go to item 6.
6	Malfunction in ECU.	Execute the diagnostic mode. (Code No. 31) No spark → Replace the ECU. Refer to “REPLACING THE ECU (engine control unit)” on page 8-117.	

Fault code No. 39

Fault code No.		39	
Item		**Fuel injector: open or short circuit detected.**	
Fail-safe system		Able to start engine (depending on the number of faulty cylinders)	
		Able to drive vehicle (depending on the number of faulty cylinders)	
Diagnostic code No.		36, 37	
36	**Actuation**	Actuates fuel injector #1 five times at one-second intervals. The “CHECK” indicator and “ ” on the Yamaha diagnostic tool screen comes on each time the fuel injector is actuated.	
	Procedure	Disconnect the fuel pump coupler, and then check that fuel injector #1 is actuated five times by listening for the operating sound.	
37	**Actuation**	Actuates fuel injector #2 five times at one-second intervals. The “CHECK” indicator and “ ” on the Yamaha diagnostic tool screen comes on each time the fuel injector is actuated.	
	Procedure	Disconnect the fuel pump coupler, and then check that fuel injector #2 is actuated five times by listening for the operating sound.	
Item	**Probable cause of malfunction and check**	**Maintenance job**	**Confirmation of service completion**

Fault code No.		39	
Item		**Fuel injector: open or short circuit detected.**	
1	Identify the malfunctioning fuel injector	Execute the diagnostic mode. (Code Nos. 36, 37) Identify the fuel injector that does not produce an operating sound. Perform the following procedures for the defective fuel injector.	
2	Connection of fuel injector #1 and/or fuel injector #2 coupler. Check the locking condition of the coupler. Disconnect the coupler and check the pins (bent or broken terminals and locking condition of the pins).	Improperly connected → Connect the coupler securely or replace the wire harness.	Execute the diagnostic mode. (Code Nos. 36, 37) No operating sound → Go to item 3. Operating sound → Go to item 7.
3	Defective fuel injector #1 and/or fuel injector #2.	Measure the fuel injector resistance. Replace if out of specification. Refer to “CHECKING THE FUEL INJECTORS” on page 8-130.	Execute the diagnostic mode. (Code Nos. 36, 37) No operating sound → Go to item 4. Operating sound → Go to item 7.
4	Connection of ECU coupler. Check the locking condition of the coupler. Disconnect the coupler and check the pins (bent or broken terminals and locking condition of the pins).	Improperly connected → Connect the coupler securely or replace the wire harness.	Execute the diagnostic mode. (Code Nos. 36, 37) No operating sound → Go to item 5. Operating sound → Go to item 7.
5	Wire harness continuity.	Open or short circuit → Replace the wire harness. Between fuel injector coupler and ECU coupler. Fuel injector #1 red/black–red/black Fuel injector #2 green/black–green/black Between fuel injector coupler and ignition coil connector. red/blue–red/black	Execute the diagnostic mode. (Code Nos. 36, 37) No operating sound → Go to item 6. Operating sound → Go to item 7.
6	Malfunction in ECU.	Replace the ECU. Refer to “REPLACING THE ECU (engine control unit)” on page 8-117.	
7	Delete the fault code.		Start the engine and let it idle for approximately 5 seconds. Check that the fault code number is not displayed.

Fault code No. 41

Fault code No.	**41**
Item	**Lean angle sensor: open or short circuit detected.**
Fail-safe system	Unable to start engine
	Unable to drive vehicle
Diagnostic code No.	08
Tool display	Lean angle sensor output voltage • 0.4–1.4 (upright) • 3.7–4.4 (overturned)
Procedure	Remove the lean angle sensor and incline it more than 45 degrees.

Item	Probable cause of malfunction and check	Maintenance job	Confirmation of service completion
1	Connection of lean angle sensor coupler. Check the locking condition of the coupler. Disconnect the coupler and check the pins (bent or broken terminals and locking condition of the pins).	Improperly connected → Connect the coupler securely or replace the wire harness.	Turn the main switch to “ON”, then to “OFF”, and then back to “ON”. Fault code number is not displayed → Service is finished. Fault code number is displayed → Go to item 2.
2	Connection of ECU coupler. Check the locking condition of the coupler. Disconnect the coupler and check the pins (bent or broken terminals and locking condition of the pins).	Improperly connected → Connect the coupler securely or replace the wire harness.	Turn the main switch to “ON”, then to “OFF”, and then back to “ON”. Fault code number is not displayed → Service is finished. Fault code number is displayed → Go to item 3.
3	Wire harness continuity.	Open or short circuit → Replace the wire harness. Between lean angle sensor coupler and ECU coupler. blue–blue yellow/green–yellow/green black/blue–black/blue	Turn the main switch to “ON”, then to “OFF”, and then back to “ON”. Fault code number is not displayed → Service is finished. Fault code number is displayed → Go to item 4.
4	Defective lean angle sensor.	Refer to “CHECKING THE LEAN ANGLE SENSOR” on page 8-125.	Turn the main switch to “ON”, then to “OFF”, and then back to “ON”. Fault code number is not displayed → Service is finished. Fault code number is displayed → Go to item 5.
5	Malfunction in ECU.	Replace the ECU. Refer to “REPLACING THE ECU (engine control unit)” on page 8-117.	

Fault code No. 42

Fault code No.	**42**	
Item	**A**	**Wheel sensor: no normal signals are received from the wheel sensor.**
	B	**Gear position switch: open or short circuit is detected.**
	C	**Clutch switch: open or short circuit is detected.**
Fail-safe system	Able to start engine	
	Able to drive vehicle	
Diagnostic code No.	07	
Meter display	Rear wheel speed pulse 0–999	
Procedure	Check that the number increases when the rear wheel is rotated. The number is cumulative and does not reset each time the wheel is stopped.	

Item	Probable cause of malfunction and check	Maintenance job	Confirmation of service completion
A-1	Locate the malfunction.	Execute the diagnostic mode. (Code No. 07) Rotate the rear wheel by hand and check that the indicated value increases.	Value does not increase → Go to item A-2.
		Execute the diagnostic mode. (Code No. 21) When the transmission is in neutral: “ON” When the transmission is in gear with the clutch lever released: “OFF”	Incorrect indication → Go to item B-2 for the gear position switch.
		When the transmission is in gear with the clutch lever squeezed and the sidestand retracted: “ON”	Incorrect indication → Go to item C-2 for the clutch switch.
A-2	Connection of rear wheel sensor coupler. Check the locking condition of the coupler. Disconnect the coupler and check the pins (bent or broken terminals and locking condition of the pins).	Improperly connected → Connect the coupler securely or replace the wire harness.	Execute the diagnostic mode. (Code No. 07) Rotate the rear wheel by hand and check that the indicated value increases. Value increases → Go to item A-8 and delete the fault code. Value does not increase → Go to item A-3.
A-3	Connection of ABS ECU coupler. Check the locking condition of the coupler. Disconnect the coupler and check the pins (bent or broken terminals and locking condition of the pins).	Improperly connected → Connect the coupler securely or replace the wire harness.	Execute the diagnostic mode. (Code No. 07) Rotate the rear wheel by hand and check that the indicated value increases. Value increases → Go to item A-8 and delete the fault code. Value does not increase → Go to item A-4.

Fault code No.		42		
Item		A	**Wheel sensor: no normal signals are received from the wheel sensor.**	
		B	**Gear position switch: open or short circuit is detected.**	
		C	**Clutch switch: open or short circuit is detected.**	
A-4	Connection of ECU coupler. Check the locking condition of the coupler. Disconnect the coupler and check the pins (bent or broken terminals and locking condition of the pins).		Improperly connected → Connect the coupler securely or replace the wire harness.	Execute the diagnostic mode. (Code No. 07) Rotate the rear wheel by hand and check that the indicated value increases. Value increases → Go to item A-8 and delete the fault code. Value does not increase → Go to item A-5.
A-5	Wire harness continuity.		Open or short circuit → Replace the wire harness. Between rear wheel sensor coupler and ABS ECU coupler. brown–brown yellow–yellow Between ABS ECU coupler and ECU coupler. white–white	Execute the diagnostic mode. (Code No. 07) Rotate the rear wheel by hand and check that the indicated value increases. Value increases → Go to item A-8 and delete the fault code. Value does not increase → Go to item A-6.
A-6	Malfunction in ECU.		Replace the ECU. Refer to “REPLACING THE ECU (engine control unit)” on page 8-117.	Go to item A-8 and delete the fault code.
A-7	Malfunction in ABS ECU.		Replace the ABS ECU.	Go to item A-8 and delete the fault code.
A-8	Delete the fault code.			Turn the main switch to “ON”, and then rotate the rear wheel by hand. Start the engine, and input the vehicle speed signals by operating the vehicle at 20 to 30 km/h (12 to 19 mph). Check that the fault code number is not displayed.

Fault code No.	42	
Item	A	**Wheel sensor: no normal signals are received from the wheel sensor.**
	B	**Gear position switch: open or short circuit is detected.**
	C	**Clutch switch: open or short circuit is detected.**
Fail-safe system	Able to start engine	
	Able to drive vehicle	
Diagnostic code No.	21	
Tool display	Neutral • “ON” (when the transmission is in neutral) • “OFF” (when the transmission is in gear or the clutch lever released)	
Procedure	Operate the transmission and clutch lever.	

Fault code No.		42	
Item		A	Wheel sensor: no normal signals are received from the wheel sensor.
		B	Gear position switch: open or short circuit is detected.
		C	Clutch switch: open or short circuit is detected.
Item	**Probable cause of malfunction and check**	**Maintenance job**	**Confirmation of service completion**
B-1	Locate the malfunction.	Execute the diagnostic mode. (Code No. 07) Rotate the rear wheel by hand and check that the indicated value increases.	Value does not increase → Go to item A-2 for the rear wheel sensor.
		Execute the diagnostic mode. (Code No. 21) When the transmission is in neutral: “ON” When the transmission is in gear with the clutch lever released: “OFF”	Incorrect indication → Go to item B-2.
		When the transmission is in gear with the clutch lever squeezed and the sidestand retracted: “ON”	Incorrect indication → Go to item C-2 for the clutch switch.
B-2	Connection of gear position switch coupler. Check the locking condition of the coupler. Disconnect the coupler and check the pins (bent or broken terminals and locking condition of the pins).	Improperly connected → Connect the coupler securely or replace the wire harness.	Execute the diagnostic mode. (Code No. 21) When the transmission is in neutral: “ON” When the transmission is in gear with the clutch lever released: “OFF” Correct indication → Go to item B-9 and delete the fault code. Incorrect indication → Go to item B-3.
B-3	Connection of ECU coupler. Check the locking condition of the coupler. Disconnect the coupler and check the pins (bent or broken terminals and locking condition of the pins).	Improperly connected → Connect the coupler securely or replace the wire harness.	Execute the diagnostic mode. (Code No. 21) When the transmission is in neutral: “ON” When the transmission is in gear with the clutch lever released: “OFF” Correct indication → Go to item B-9 and delete the fault code. Incorrect indication → Go to item B-4.
B-4	Wire harness continuity.	Open or short circuit → Replace the wire harness. Between ECU coupler and diode 4. black/yellow–black/yellow Between diode 4 and diode 1. yellow/black–yellow/black Between diode 1 and gear position switch coupler. sky blue–sky blue	Execute the diagnostic mode. (Code No. 21) When the transmission is in neutral: “ON” When the transmission is in gear with the clutch lever released: “OFF” Correct indication → Go to item B-9 and delete the fault code. Incorrect indication → Go to item B-5.

Fault code No.		42		
Item		A	Wheel sensor: no normal signals are received from the wheel sensor.	
		B	Gear position switch: open or short circuit is detected.	
		C	Clutch switch: open or short circuit is detected.	
B-5	Defective diode.		Check the diode 1. Replace if defective. Refer to “CHECKING THE DIODES” on page 8-122.	Execute the diagnostic mode. (Code No. 21) When the transmission is in neutral: “ON” When the transmission is in gear with the clutch lever released: “OFF” Correct indication → Go to item B-9 and delete the fault code. Incorrect indication → Go to item B-6.
B-6	Defective gear position switch.		Check the gear position switch. Replace if defective. Refer to “CHECKING THE GEAR POSITION SWITCH” on page 8-129.	Execute the diagnostic mode. (Code No. 21) When the transmission is in neutral: “ON” When the transmission is in gear with the clutch lever released: “OFF” Correct indication → Go to item B-9 and delete the fault code. Incorrect indication → Go to item B-7.
B-7	Faulty shift drum (neutral detection area).		Malfunction → Replace the shift drum. Refer to “TRANSMISSION” on page 5-90.	Execute the diagnostic mode. (Code No. 21) When the transmission is in neutral: “ON” When the transmission is in gear with the clutch lever released: “OFF” Correct indication → Go to item B-9 and delete the fault code. Incorrect indication → Go to item B-8.
B-8	Malfunction in ECU.		Replace the ECU. Refer to “REPLACING THE ECU (engine control unit)” on page 8-117.	
B-9	Delete the fault code.			Turn the main switch to “ON”, and then rotate the rear wheel by hand. Start the engine, and input the vehicle speed signals by operating the vehicle at 20 to 30 km/h (12 to 19 mph). Check that the fault code number is not displayed.

Fault code No.	**42**	
Item	**A**	**Wheel sensor: no normal signals are received from the wheel sensor.**
	B	**Gear position switch: open or short circuit is detected.**
	C	**Clutch switch: open or short circuit is detected.**
Fail-safe system	Able to start engine	
	Able to drive vehicle	
Diagnostic code No.	21	
Meter display	Clutch switch • "ON" (when the clutch lever is squeezed with the transmission in gear and when the sidestand is retracted) • "OFF" (when the clutch lever is squeezed with the transmission in gear and when the sidestand is extended)	
Procedure	Operate the transmission, clutch lever, and sidestand.	

Item	Probable cause of malfunction and check	Maintenance job	Confirmation of service completion
C-1	Locate the malfunction.	Execute the diagnostic mode. (Code No. 07) Rotate the rear wheel by hand and check that the indicated value increases.	Value does not increase → Go to item A-2 for the rear wheel sensor.
		Execute the diagnostic mode. (Code No. 21) When the transmission is in neutral: "ON" When the transmission is in gear with the clutch lever released: "OFF"	Incorrect indication → Go to item B-2 for the gear position switch.
		When the transmission is in gear with the clutch lever squeezed and the sidestand retracted: "ON"	Incorrect indication → Go to item C-2.
C-2	Clutch lever free play adjustment.	Refer to "ADJUSTING THE CLUTCH LEVER FREE PLAY" on page 3-12.	Execute the diagnostic mode. (Code No. 21) When the clutch lever is released with the transmission in gear and when the sidestand is retracted: "OFF" When the clutch lever is squeezed with the transmission in gear and when the sidestand is retracted: "ON" Correct indication→ Go to item C-8 and delete the fault code. Incorrect indication → Go to item C-3.

Fault code No.		42		
Item		A	Wheel sensor: no normal signals are received from the wheel sensor.	
		B	Gear position switch: open or short circuit is detected.	
		C	Clutch switch: open or short circuit is detected.	
C-3	Connection of clutch switch coupler. Check the locking condition of the coupler. Disconnect the coupler and check the pins (bent or broken terminals and locking condition of the pins).		Improperly connected → Connect the coupler securely or replace the wire harness.	Execute the diagnostic mode. (Code No. 21) When the clutch lever is released with the transmission in gear and when the sidestand is retracted: “OFF” When the clutch lever is squeezed with the transmission in gear and when the sidestand is retracted: “ON” Correct indication→ Go to item C-8 and delete the fault code. Incorrect indication → Go to item C-4.
C-4	Connection of ECU coupler. Check the locking condition of the coupler. Disconnect the coupler and check the pins (bent or broken terminals and locking condition of the pins).		Improperly connected → Connect the coupler securely or replace the wire harness.	Execute the diagnostic mode. (Code No. 21) When the clutch lever is released with the transmission in gear and when the sidestand is retracted: “OFF” When the clutch lever is squeezed with the transmission in gear and when the sidestand is retracted: “ON” Correct indication→ Go to item C-8 and delete the fault code. Incorrect indication → Go to item C-5.
C-5	Wire harness continuity.		Open or short circuit → Replace the wire harness. Between clutch switch coupler and diode coupler. yellow/black–yellow/black Between diode coupler and ECU coupler. black/yellow–black/yellow	Execute the diagnostic mode. (Code No. 21) When the clutch lever is released with the transmission in gear and when the sidestand is retracted: “OFF” When the clutch lever is squeezed with the transmission in gear and when the sidestand is retracted: “ON” Correct indication→ Go to item C-8 and delete the fault code. Incorrect indication → Go to item C-6.

Fault code No.		42	
Item		A	Wheel sensor: no normal signals are received from the wheel sensor.
		B	Gear position switch: open or short circuit is detected.
		C	Clutch switch: open or short circuit is detected.
C-6	Defective clutch switch.	Check the clutch switch. Replace if defective. Refer to “CHECKING THE SWITCHES” on page 8-113.	Execute the diagnostic mode. (Code No. 21) When the clutch lever is released with the transmission in gear and when the sidestand is retracted: “OFF” When the clutch lever is squeezed with the transmission in gear and when the sidestand is retracted: “ON” Correct indication→ Go to item C-8 and delete the fault code. Incorrect indication → Go to item C-7.
C-7	Malfunction in ECU.	Replace the ECU. Refer to “REPLACING THE ECU (engine control unit)” on page 8-117.	
C-8	Delete the fault code.		Turn the main switch to “ON”, and then rotate the rear wheel by hand. Start the engine, and input the vehicle speed signals by operating the vehicle at 20 to 30 km/h (12 to 19 mph). Check that the fault code number is not displayed.

Fault code No. 43

Fault code No.		43	
Item		Fuel system voltage: incorrect voltage supplied to the fuel injector and fuel pump.	
Fail-safe system		Able to start engine	
		Able to drive vehicle	
Diagnostic code No.		09, 50	
Tool display		—	
Procedure		—	
Item	**Probable cause of malfunction and check**	**Maintenance job**	**Confirmation of service completion**
1	Connection of ECU coupler. Check the locking condition of the coupler. Disconnect the coupler and check the pins (bent or broken terminals and locking condition of the pins).	Improperly connected → Connect the coupler securely or replace the wire harness.	Start the engine and let it idle for approximately 5 seconds. Fault code number is not displayed → Service is finished. Fault code number is displayed → Go to item 2.

Fault code No.		43	
Item		**Fuel system voltage: incorrect voltage supplied to the fuel injector and fuel pump.**	
2	Wire harness continuity.	Open or short circuit → Replace the wire harness. Between ECU coupler and starting circuit cut-off relay coupler. red/blue–red/blue Between starting circuit cut-off relay coupler and cylinder-#1 ignition coil connector. red/black–red/black Between cylinder-#1 ignition coil connector and cylinder-#2 ignition coil connector. red/black–red/black Between cylinder-#2 ignition coil connector and right handlebar switch coupler. red/black–red/black Between right handlebar switch coupler and radiator fan motor relay coupler. red/white–red/white Between radiator fan motor relay coupler and ignition fuse. red/white–red/white Between ignition fuse and main switch coupler. brown/red–brown/red Between main switch coupler and starter relay coupler. red–red Between starter relay coupler and battery. red–red	Start the engine and let it idle for approximately 5 seconds. Fault code number is not displayed → Service is finished. Fault code number is displayed → Go to item 3.
3	Malfunction in ECU.	Replace the ECU. Refer to “REPLACING THE ECU (engine control unit)” on page 8-117.	

Fault code No. 44

Fault code No.	44
Item	**EEPROM fault code number: an error is detected while reading or writing on EEPROM.**
Fail-safe system	Able to start engine
	Able to drive vehicle
Diagnostic code No.	60

Fault code No.	**44**
Item	**EEPROM fault code number: an error is detected while reading or writing on EEPROM.**
Tool display	EEPROM fault code display • 00 (no history) • 01–02: Cylinder fault code number (history exists) If more than one cylinder is defective, the display switches every two seconds to show the cylinder fault code numbers of all defective cylinders in a repeating cycle. • 11: Data error for ISC (idle speed control) learning values (history exists)
Procedure	—

Item	Probable cause of malfunction and check	Maintenance job	Confirmation of service completion
1	Locate the malfunction	Execute the diagnostic mode. (Code No. 60) 00: Go to item 5. 01: Go to item 2. 02: Go to item 3. 11: Go to item 4.	
2	“01” is indicated in diagnostic mode (code No. 60). EEPROM data error for adjustment of CO concentration of cylinder #1.	Change the CO concentration of cylinder #1, and rewrite in EEPROM. Refer to “ADJUSTING THE EXHAUST GAS VOLUME” on page 3-11. After this adjustment is made, turn the main switch to “OFF”.	Turn the main switch to “ON”. Fault code number is not displayed → Service is finished. Fault code number is displayed → Repeat item 1. If the same number is indicated, go to item 5.
3	“02” is indicated in diagnostic mode (code No. 60). EEPROM data error for adjustment of CO concentration of cylinder #2.	Change the CO concentration of cylinder #2, and rewrite in EEPROM. Refer to “ADJUSTING THE EXHAUST GAS VOLUME” on page 3-11. After this adjustment is made, turn the main switch to “OFF”.	Turn the main switch to “ON”. Fault code number is not displayed → Service is finished. Fault code number is displayed → Repeat item 1. If the same number is indicated, go to item 5.
4	“11” is indicated in diagnostic mode (code No. 60). EEPROM data error for ISC (idle speed control) learning values.	Turn the main switch to “OFF”.	Turn the main switch to “ON”. Fault code number is not displayed → Service is finished. Fault code number is displayed → Repeat item 1. If the same number is indicated, go to item 5.
5	Malfunction in ECU.	Replace the ECU. Refer to “REPLACING THE ECU (engine control unit)” on page 8-117.	

Fault code No. 45

Fault code No.	**45**
Item	**Power shut off: incorrect back up voltage is supplied to ECU.**
Fail-safe system	—
	—
Diagnostic code No.	—

Fault code No.	**45**		
Item	**Power shut off: incorrect back up voltage is supplied to ECU.**		
Tool display	—		
Procedure	—		
Item	**Probable cause of malfunction and check**	**Maintenance job**	**Confirmation of service completion**
1	Installed condition of battery lead. Check the battery and battery lead installing condition. (loosen terminal bolts)	Improperly connected → Connect the connecting securely or replace the wire harness.	Set the main switch to “ON”. Fault code number is not displayed → Service is finished. Fault code number is displayed → Go to item 2.
2	Connection of starter relay coupler. Check the locking condition of the coupler. Disconnect the coupler and check the pins (bent or broken terminals and locking condition of pins).	Improperly connected → Connect the coupler securely or replace the harness.	Set the main switch to “ON”. Fault code number is not displayed → Service is finished. Fault code number is displayed → Go to item 3.
3	Back up fuse condition. Check the back up fuse.	Blown the fuse → Replace the fuse or wire harness.	Set the main switch to “ON”. Fault code number is not displayed → Service is finished. Fault code number is displayed → Go to item 4.
4	Wire harness continuity.	Open or short circuit → Replace the wire harness. Between battery and fuse box coupler. red–red Between fuse box and ECU coupler. red–red	Set the main switch to “ON”. Fault code number is not displayed → Service is finished. Fault code number is displayed → Go to item 5.
5	Malfunction in ECU.	Replace the ECU. Refer to “REPLACING THE ECU (engine control unit)” on page 8-117.	

Fault code No. 46

Fault code No.	**46**		
Item	**Charging voltage is abnormal.**		
Fail-safe system	Able to start engine		
	Able to drive vehicle		
Diagnostic code No.	—		
Tool display	—		
Procedure	—		
Item	**Probable cause of malfunction and check**	**Maintenance job**	**Confirmation of service completion**

Fault code No.		46	
Item		Charging voltage is abnormal.	
1	Malfunction in charging system.	Check the charging system. Refer to “CHARGING SYSTEM” on page 8-13. Defective rectifier/regulator or AC magneto → Replace. Defective connection in the charging system circuit → Properly connect or replace the wire harness.	Start the engine and let it idle for approximately 5 seconds. Fault code number is not displayed → Service is finished. Fault code number is displayed → Repeat the maintenance job.

Fault code No. 50

Fault code No.		50	
Item		Faulty ECU memory. (When this malfunction is detected in the ECU, the fault code number might not appear on the meter display.)	
Fail-safe system		Unable to start engine	
		Unable to drive vehicle	
Diagnostic code No.		—	
Tool display		—	
Procedure		—	
Item	**Probable cause of malfunction and check**	**Maintenance job**	**Confirmation of service completion**
1	Malfunction in ECU.	Replace the ECU. Refer to “REPLACING THE ECU (engine control unit)” on page 8-117.	Turn the main switch to “ON”. Check that the fault code number is not displayed.

Fault code No. Er-1 (fault code display)

Fault code No.		Er-1 (fault code display)	
Item		ECU (engine control unit) internal malfunction (output signal error): signals cannot be transmitted between the ECU and the multi-function meter.	
Fail-safe system		Able to start engine (unable when ECU is malfunctioning)	
		Able to drive vehicle (unable when ECU is malfunctioning)	
Diagnostic code No.		—	
Tool display		—	
Procedure		—	
Item	**Probable cause of malfunction and check**	**Maintenance job**	**Confirmation of service completion**
1	Connection of meter assembly coupler. Check the locking condition of the coupler. Disconnect the coupler and check the pins (bent or broken terminals and locking condition of the pins).	Improperly connected → Connect the coupler securely or replace the wire harness.	Turn the main switch to “ON”. Fault code number is not displayed → Service is finished. Fault code number is displayed → Go to item 2.

Fault code No.		Er-1 (fault code display)	
Item		ECU (engine control unit) internal malfunction (output signal error): signals cannot be transmitted between the ECU and the multi-function meter.	
2	Connection of wire harness ECU coupler. Check the locking condition of the coupler. Disconnect the coupler and check the pins (bent or broken terminals and locking condition of the pins).	Improperly connected → Connect the coupler securely or replace the wire harness.	Turn the main switch to "ON". Fault code number is not displayed → Service is finished. Fault code number is displayed → Go to item 3.
3	Wire harness continuity.	Open or short circuit → Replace the wire harness. Between ECU coupler and Yamaha diagnostic tool coupler. yellow/blue–yellow/blue Between Yamaha diagnostic tool coupler and meter assembly coupler. yellow/blue–yellow/blue	Turn the main switch to "ON". Fault code number is not displayed → Service is finished. Fault code number is displayed → Go to item 4.
4	Defective meter assembly.	Replace the meter assembly.	Turn the main switch to "ON". Fault code number is not displayed → Service is finished. Fault code number is displayed → Go to item 5.
5	Malfunction in ECU.	Replace the ECU. Refer to "REPLACING THE ECU (engine control unit)" on page 8-117.	

Fault code No. Waiting for connection (Yamaha diagnostic tool)

Fault code No.		Waiting for connection (Yamaha diagnostic tool)	
Item		ECU (engine control unit) internal malfunction (output signal error): Signals cannot be transmitted between the ECU and Yamaha diagnostic tool.	
Fail-safe system		Able to start engine (unable when ECU is malfunctioning)	
		Able to drive vehicle (unable when ECU is malfunctioning)	
Diagnostic code No.		—	
Tool display		—	
Procedure		—	
Item	**Probable cause of malfunction and check**	**Maintenance job**	**Confirmation of service completion**
1	Connection of Yamaha diagnostic tool coupler. Check the locking condition of the coupler. Disconnect the coupler and check it (bent or broken terminals and locking condition).	Improperly connected → Connect the coupler securely or replace the wire harness.	Connect the Yamaha diagnostic tool and turn the main switch to "ON". Fault code number is not displayed → Service is finished. Fault code number is displayed → Go to item 2.

Fault code No.		Waiting for connection (Yamaha diagnostic tool)	
Item		ECU (engine control unit) internal malfunction (output signal error): Signals cannot be transmitted between the ECU and Yamaha diagnostic tool.	
2	Connection of wire harness ECU coupler. Check the locking condition of the coupler. Disconnect the coupler and check the pins (bent or broken terminals and locking condition of the pins).	Improperly connected → Connect the coupler securely or replace the wire harness.	Connect the Yamaha diagnostic tool and turn the main switch to "ON". Fault code number is not displayed → Service is finished. Fault code number is displayed → Go to item 3.
3	Wire harness continuity.	Open or short circuit → Replace the wire harness. Between ECU coupler and Yamaha diagnostic tool coupler. yellow/blue–yellow/blue	Connect the Yamaha diagnostic tool and turn the main switch to "ON". Fault code number is not displayed → Service is finished. Fault code number is displayed → Go to item 4.
4	Defective Yamaha diagnostic tool.	Replace the Yamaha diagnostic tool.	Connect the Yamaha diagnostic tool and turn the main switch to "ON". Fault code number is not displayed → Service is finished. Fault code number is displayed → Go to item 5.
5	Malfunction in ECU.	Replace the ECU. Refer to "REPLACING THE ECU (engine control unit)" on page 8-117.	

Fault code No. Er-2

Fault code No.		Er-2	
Item		ECU (engine control unit) internal malfunction (output signal error): no signals are received from the ECU within the specified duration.	
Fail-safe system		Able to start engine	
		Able to drive vehicle	
Diagnostic code No.		—	
Tool display		—	
Procedure		—	
Item	**Probable cause of malfunction and check**	**Maintenance job**	**Confirmation of service completion**
1	Connection of meter assembly coupler. Check the locking condition of the coupler. Disconnect the coupler and check the pins (bent or broken terminals and locking condition of the pins).	Improperly connected → Connect the coupler securely or replace the wire harness.	Turn the main switch to "ON". Fault code number is not displayed → Service is finished. Fault code number is displayed → Go to item 2.

Fault code No.		Er-2	
Item		**ECU (engine control unit) internal malfunction (output signal error): no signals are received from the ECU within the specified duration.**	
2	Connection of wire harness ECU coupler. Check the locking condition of the coupler. Disconnect the coupler and check the pins (bent or broken terminals and locking condition of the pins).	Improperly connected → Connect the coupler securely or replace the wire harness.	Turn the main switch to “ON”. Fault code number is not displayed → Service is finished. Fault code number is displayed → Go to item 3.
3	Wire harness continuity.	Open or short circuit → Replace the wire harness. Between ECU coupler and Yamaha diagnostic tool coupler. yellow/blue–yellow/blue Between Yamaha diagnostic tool coupler and meter assembly coupler. yellow/blue–yellow/blue	Turn the main switch to “ON”. Fault code number is not displayed → Service is finished. Fault code number is displayed → Go to item 4.
4	Defective meter assembly.	Replace the meter assembly.	Turn the main switch to “ON”. Fault code number is not displayed → Service is finished. Fault code number is displayed → Go to item 5.
5	Malfunction in ECU.	Replace the ECU. Refer to “REPLACING THE ECU (engine control unit)” on page 8-117.	

Fault code No. Er-3

Fault code No.		Er-3	
Item		**ECU (engine control unit) internal malfunction (output signal error): data from the ECU cannot be received correctly.**	
Fail-safe system		Able to start engine	
		Able to drive vehicle	
Diagnostic code No.		—	
Tool display		—	
Procedure		—	
Item	**Probable cause of malfunction and check**	**Maintenance job**	**Confirmation of service completion**
1	Connection of meter assembly coupler. Check the locking condition of the coupler. Disconnect the coupler and check the pins (bent or broken terminals and locking condition of the pins).	Improperly connected → Connect the coupler securely or replace the wire harness.	Turn the main switch to “ON”. Fault code number is not displayed → Service is finished. Fault code number is displayed → Go to item 2.

Fault code No.		Er-3	
Item		**ECU (engine control unit) internal malfunction (output signal error): data from the ECU cannot be received correctly.**	
2	Connection of wire harness ECU coupler. Check the locking condition of the coupler. Disconnect the coupler and check the pins (bent or broken terminals and locking condition of the pins).	Improperly connected → Connect the coupler securely or replace the wire harness.	Turn the main switch to “ON”. Fault code number is not displayed → Service is finished. Fault code number is displayed → Go to item 3.
3	Wire harness continuity.	Open or short circuit → Replace the wire harness. Between ECU coupler and Yamaha diagnostic tool coupler. yellow/blue–yellow/blue Between Yamaha diagnostic tool coupler and meter assembly coupler. yellow/blue–yellow/blue	Turn the main switch to “ON”. Fault code number is not displayed → Service is finished. Fault code number is displayed → Go to item 4.
4	Defective meter assembly.	Replace the meter assembly.	Turn the main switch to “ON”. Fault code number is not displayed → Service is finished. Fault code number is displayed → Go to item 5.
5	Malfunction in ECU.	Replace the ECU. Refer to “REPLACING THE ECU (engine control unit)” on page 8-117.	

Fault code No. Er-4 (fault code display)

Fault code No.		Er-4 (fault code display)	
Item		**ECU (engine control unit) internal malfunction (input signal error): non-registered data has been received from the meter.**	
Fail-safe system		Able to start engine	
		Able to drive vehicle	
Diagnostic code No.		—	
Tool display		—	
Procedure		—	
Item	**Probable cause of malfunction and check**	**Maintenance job**	**Confirmation of service completion**
1	Connection of meter assembly coupler. Check the locking condition of the coupler. Disconnect the coupler and check the pins (bent or broken terminals and locking condition of the pins).	Improperly connected → Connect the coupler securely or replace the wire harness.	Turn the main switch to “ON”. Fault code number is not displayed → Service is finished. Fault code number is displayed → Go to item 2.

Fault code No.		Er-4 (fault code display)	
Item		ECU (engine control unit) internal malfunction (input signal error): non-registered data has been received from the meter.	
2	Connection of wire harness ECU coupler. Check the locking condition of the coupler. Disconnect the coupler and check the pins (bent or broken terminals and locking condition of the pins).	Improperly connected → Connect the coupler securely or replace the wire harness.	Turn the main switch to "ON". Fault code number is not displayed → Service is finished. Fault code number is displayed → Go to item 3.
3	Wire harness continuity.	Open or short circuit → Replace the wire harness. Between ECU coupler and Yamaha diagnostic tool coupler. yellow/blue–yellow/blue Between Yamaha diagnostic tool coupler and meter assembly coupler. yellow/blue–yellow/blue	Turn the main switch to "ON". Fault code number is not displayed → Service is finished. Fault code number is displayed → Go to item 4.
4	Defective meter assembly.	Replace the meter assembly.	Turn the main switch to "ON". Fault code number is not displayed → Service is finished. Fault code number is displayed → Go to item 5.
5	Malfunction in ECU.	Replace the ECU. Refer to "REPLACING THE ECU (engine control unit)" on page 8-117.	

Fault code No. Er-4 (Yamaha diagnostic tool)

Fault code No.		Er-4 (Yamaha diagnostic tool)	
Item		ECU (engine control unit) internal malfunction (input signal error): no normal signals are received from the Yamaha diagnostic tool.	
Fail-safe system		Able to start engine	
		Able to drive vehicle	
Diagnostic code No.		—	
Tool display		—	
Procedure		—	
Item	**Probable cause of malfunction and check**	**Maintenance job**	**Confirmation of service completion**
1	Connection of Yamaha diagnostic tool coupler. Check the locking condition of the coupler. Disconnect the coupler and check it (bent or broken terminals and locking condition).	Improperly connected → Connect the coupler securely or replace the wire harness.	Connect the Yamaha diagnostic tool and turn the main switch to "ON". Fault code number is not displayed → Service is finished. Fault code number is displayed → Go to item 2.

Fault code No.		**Er-4 (Yamaha diagnostic tool)**	
Item		**ECU (engine control unit) internal malfunction (input signal error): no normal signals are received from the Yamaha diagnostic tool.**	
2	Connection of wire harness ECU coupler. Check the locking condition of the coupler. Disconnect the coupler and check the pins (bent or broken terminals and locking condition of the pins).	Improperly connected → Connect the coupler securely or replace the wire harness.	Connect the Yamaha diagnostic tool and turn the main switch to "ON". Fault code number is not displayed → Service is finished. Fault code number is displayed → Go to item 3.
3	Wire harness continuity.	Open or short circuit → Replace the wire harness. Between ECU coupler and Yamaha diagnostic tool coupler. yellow/blue–yellow/blue	Connect the Yamaha diagnostic tool and turn the main switch to "ON". Fault code number is not displayed → Service is finished. Fault code number is displayed → Go to item 4.
4	Defective Yamaha diagnostic tool.	Replace the Yamaha diagnostic tool.	Connect the Yamaha diagnostic tool and turn the main switch to "ON". Fault code number is not displayed → Service is finished. Fault code number is displayed → Go to item 5.
5	Malfunction in ECU.	Replace the ECU. Refer to "REPLACING THE ECU (engine control unit)" on page 8-117.	

EAS20081
FUEL PUMP SYSTEM

EAS30513
CIRCUIT DIAGRAM

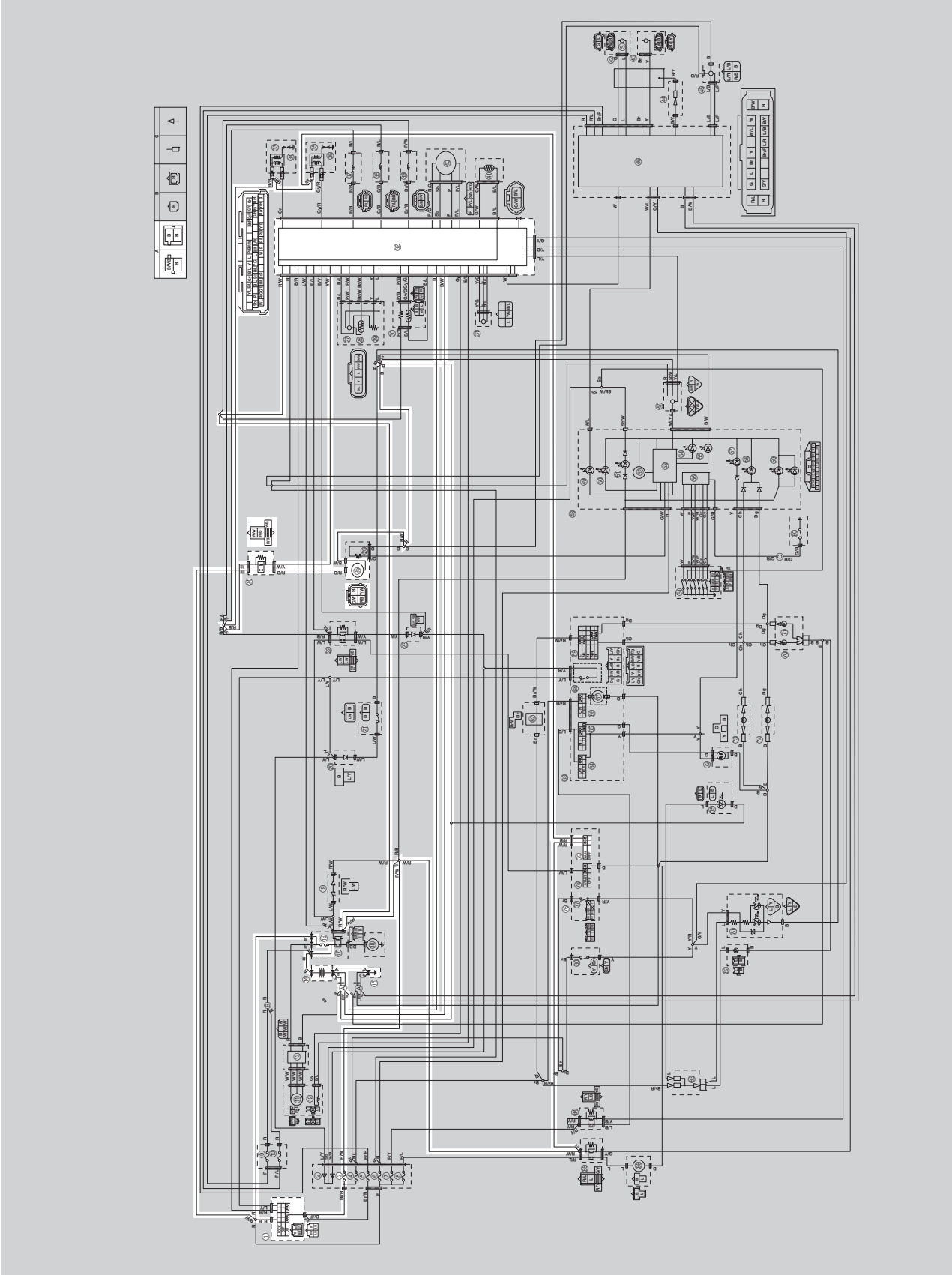

1. Main switch
3. Ignition fuse
14. Battery
15. Engine ground
16. Main fuse
24. Fuel pump relay
25. Fuel pump
32. ECU (Engine Control Unit)
76. Handlebar switch (right)
79. Engine stop switch

EAS30514

TROUBLESHOOTING

If the fuel pump fails to operate.

TIP

- Before troubleshooting, remove the following part(s):

1. Passenger seat
2. Center cover
3. Rider seat
4. Side panel assemblies
5. Fuel tank

1. Check the fuses. (Ignition, and main) Refer to "CHECKING THE FUSES" on page 8-117.	NG →	Replace the fuse(s).
OK ↓		
2. Check the battery. Refer to "CHECKING AND CHARGING THE BATTERY" on page 8-118.	NG →	• Clean the battery terminals. • Recharge or replace the battery.
OK ↓		
3. Check the main switch. Refer to "CHECKING THE SWITCHES" on page 8-113.	NG →	Replace the main switch.
OK ↓		
4. Check the engine stop switch. Refer to "CHECKING THE SWITCHES" on page 8-113.	NG →	• The engine stop switch is faulty. • Replace the right handlebar switch.
OK ↓		
5. Check the fuel pump. Refer to "CHECKING THE FUEL PUMP BODY" on page 7-3.	NG →	Replace the fuel pump assembly.
OK ↓		
6. Check the entire fuel pump system wiring. Refer to "CIRCUIT DIAGRAM" on page 8-73.	NG →	Properly connect or replace the wiring harness.
OK ↓		
Replace the ECU. Refer to "REPLACING THE ECU (engine control unit)" on page 8-117.		

EAS20085
ABS (ANTI-LOCK BRAKE SYSTEM)

EAS30843
CIRCUIT DIAGRAM

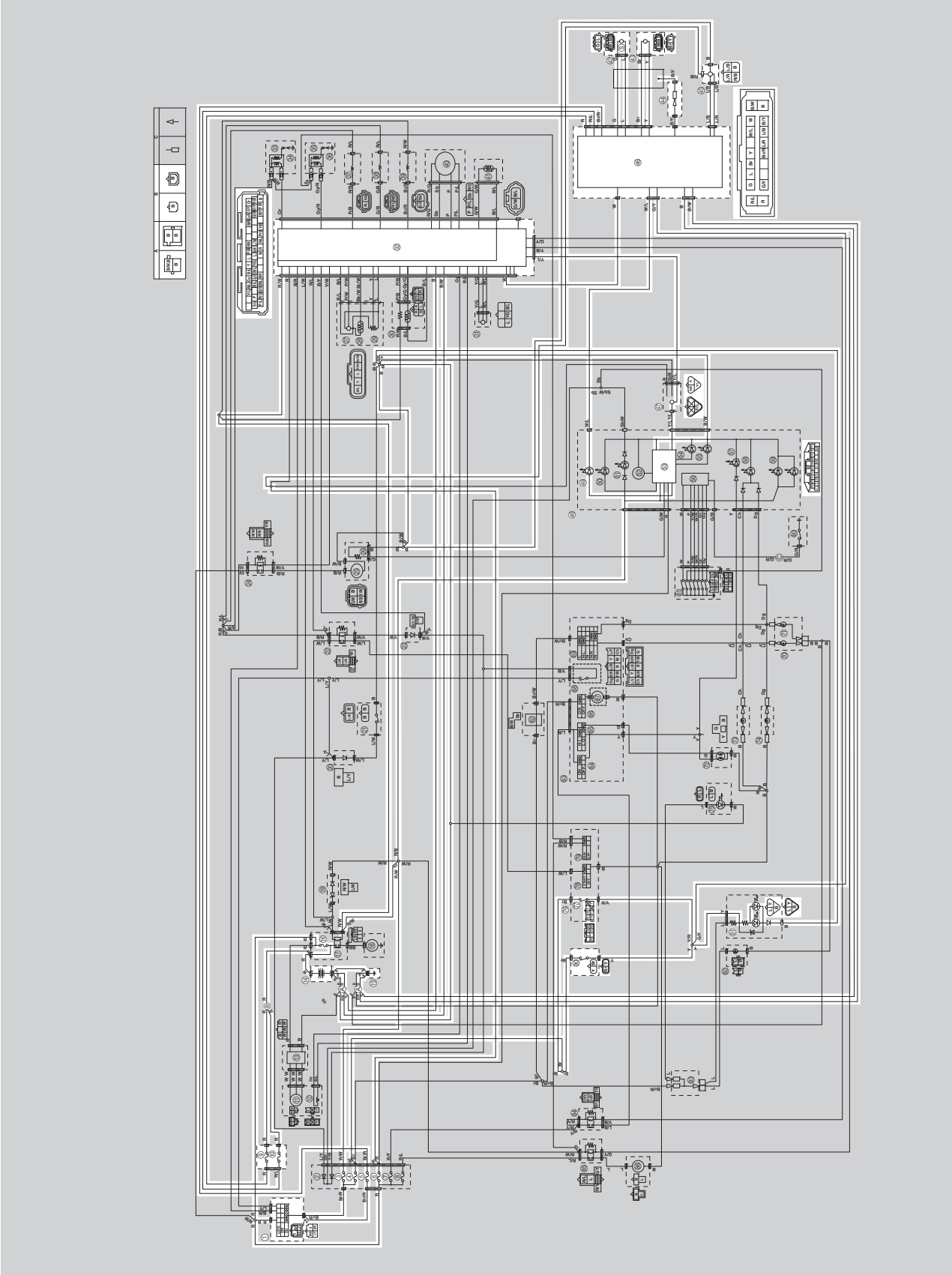

1. Main switch
3. Ignition fuse
4. Signaling system fuse
5. ABS ECU fuse
6. Backup fuse
9. ABS motor fuse
10. ABS solenoid fuse
14. Battery
15. Engine ground
16. Main fuse
32. ECU (Engine Control Unit)
42. Front wheel sensor
43. Rear wheel sensor
44. ABS ECU coupler
45. ABS test coupler
46. ABS ECU
47. Yamaha diagnostic tool coupler
48. Meter assembly
49. ABS warning light
53. Multi-function meter 1
76. Handlebar switch (right)
77. Front brake light switch
80. Rear brake light switch
81. Tail/brake light

EAS30844

ABS COUPLER LOCATION CHART

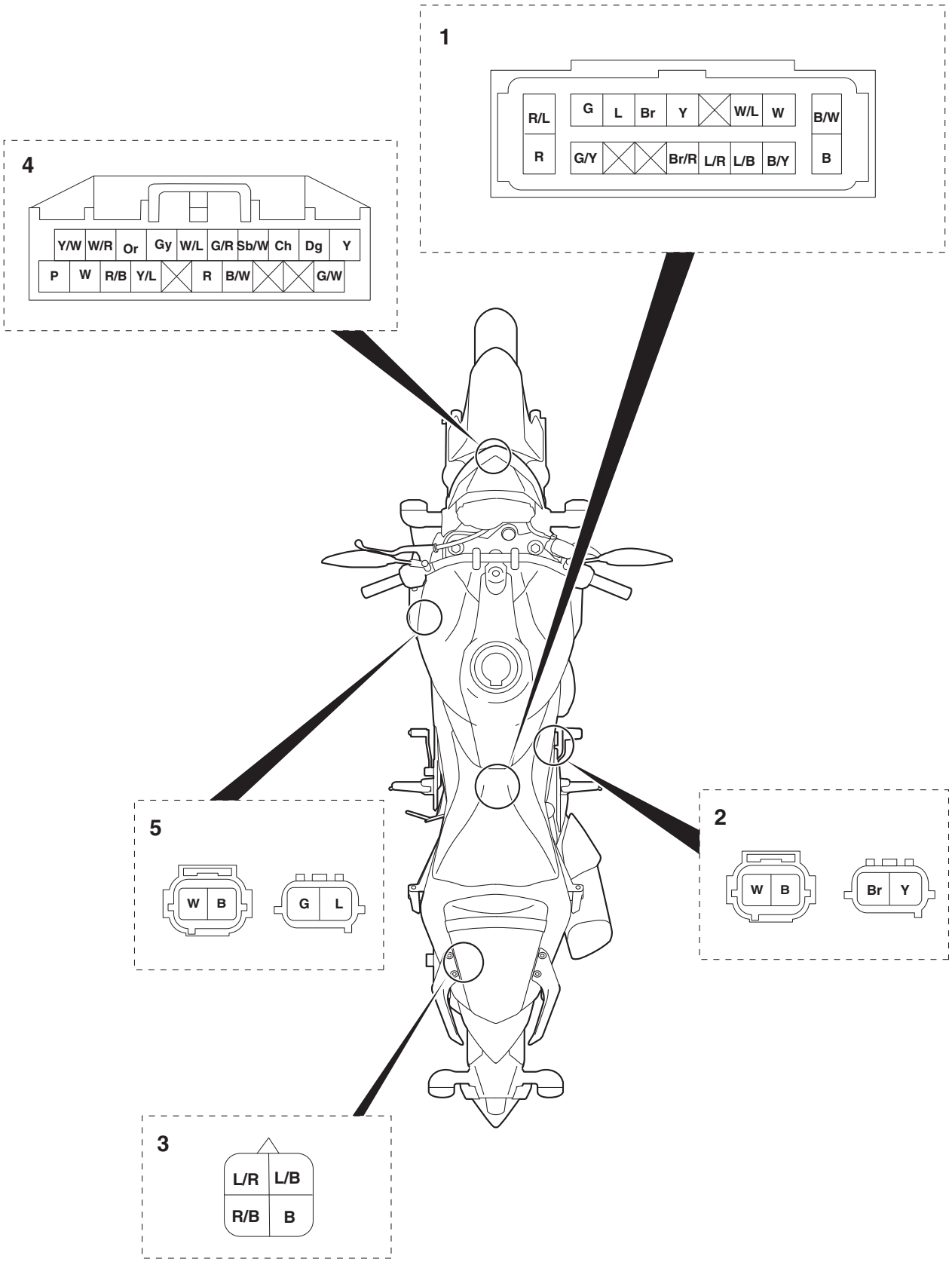

1. ABS ECU coupler
2. Rear wheel sensor coupler
3. ABS test coupler
4. Meter assembly coupler
5. Front wheel sensor coupler

EAS30845
MAINTENANCE OF THE ABS ECU

Checking the ABS ECU
1. Check:
   - Terminals “1” of the ABS ECU
     Cracks/damages → Replace the hydraulic unit assembly, brake hoses, and brake pipes that are connected to the assembly as a set.
   - Terminals “2” of the ABS ECU coupler
     Connection defective, contaminated, come-off → Correct or clean.

TIP

If the ABS ECU coupler is clogged with mud or dirt, clean with compressed air.

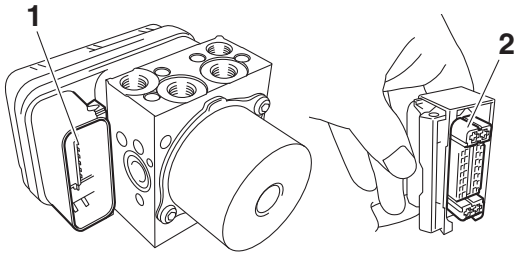

EAS30528
ABS TROUBLESHOOTING OUTLINE
This section describes the troubleshooting for the ABS in detail. Read this service manual carefully and make sure you fully understand the information provided before repairing any malfunctions or performing service.
The ABS ECU (electronic control unit) has a self-diagnosis function. When failures occur in the system, the ABS warning light on the meter assembly indicates a malfunction.
The following troubleshooting describes the problem identification and service method using the Yamaha diagnostic tool. For information about using the Yamaha diagnostic tool, refer to “[B-2] DIAGNOSIS USING THE FAULT CODES” on page 8-86. For troubleshooting items other than the following items, follow the normal service method.

EWA16710
WARNING

When maintenance or checks have been performed on components related to the ABS, be sure to perform a final check before delivering the vehicle to the customer.

TIP

To final check, refer to “[C-1] FINAL CHECK” on page 8-108.

ABS operation when the ABS warning light comes on
1. The ABS warning light remains on → ABS operates as a normal brake system.
   - A malfunction was detected using the ABS self-diagnosis function.
   - The ABS self-diagnosis has not been completed.
     The ABS self-diagnosis starts when the main switch is turned to “ON” and finishes when the vehicle has traveled at a speed of approximately 10 km/h (6 mi/h).
2. The ABS warning light comes on after the engine starts, and then goes off when the vehicle starts moving (traveling at a speed of approximately 10 km/h (6 mi/h)). → ABS operation is normal.
3. The ABS warning light flashes → ABS operation is normal.
   - Refer to “BASIC INSTRUCTIONS FOR TROUBLESHOOTING” on page 8-82.

Self-diagnosis and servicing

The ABS ECU has a self-diagnosis function. By utilizing this function, quick problem identification and service are possible. Previous malfunctions can be checked since the ABS ECU also stores the malfunction history.

The fault codes recorded in the ABS ECU can be checked using the Yamaha diagnostic tool. When the service is finished, check the normal operation of the vehicle, and then delete the fault code(s). For information about deleting the fault codes, refer to "[B-3] DELETING THE FAULT CODES" on page 8-108. By deleting the fault codes stored in the ABS ECU memory, it is possible to pursue the cause correctly if another malfunction occurs.

TIP

The ABS performs a self-diagnosis test for a few seconds each time the vehicle first starts off after the main switch was turned to "ON". During this test, a "clicking" noise can be heard from inside of the right air scoop, and if the brake lever or brake pedal are even slightly applied, a vibration can be felt at the lever and pedal, but these do not indicate a malfunction.

Self-diagnosis using the ABS ECU

The ABS ECU performs a static check of the entire system when the main switch is turned to "ON". It also checks for malfunctions while the vehicle is ridden. Since all malfunctions are recorded after they are detected, it is possible to check the recorded malfunction data by utilizing the Yamaha diagnostic tool when the ABS ECU has entered the self-diagnosis mode.

Special precautions for handling and servicing a vehicle equipped with ABS

ECA18490

NOTICE

Care should be taken not to damage components by subjecting them to shocks or pulling on them with too much force since the ABS components are precisely adjusted.

- The ABS ECU and hydraulic unit are united assemblies and cannot be disassembled.
- The malfunction history is stored in the memory of the ABS ECU. Delete the fault codes when the service is finished. (This is because the past fault codes will be displayed again if another malfunction occurs.)

EAS30529

BASIC INSTRUCTIONS FOR TROUBLESHOOTING

EWA17420

WARNING

- **Perform the troubleshooting [A]→[B]→[C] in order. Be sure to follow the order since a wrong diagnosis could result if the steps are followed in a different order or omitted.**
- **Use sufficiently charged regular batteries only.**

[A] Malfunction check using the ABS warning light

[B] Use the Yamaha diagnostic tool and determine the location of the malfunction and the cause from the recorded fault code.

Determine the cause of the malfunction from the condition and place where the malfunction occurred.

[C] Servicing the ABS

Execute the final check after disassembly and assembly.

EAS30530

BASIC PROCESS FOR TROUBLESHOOTING

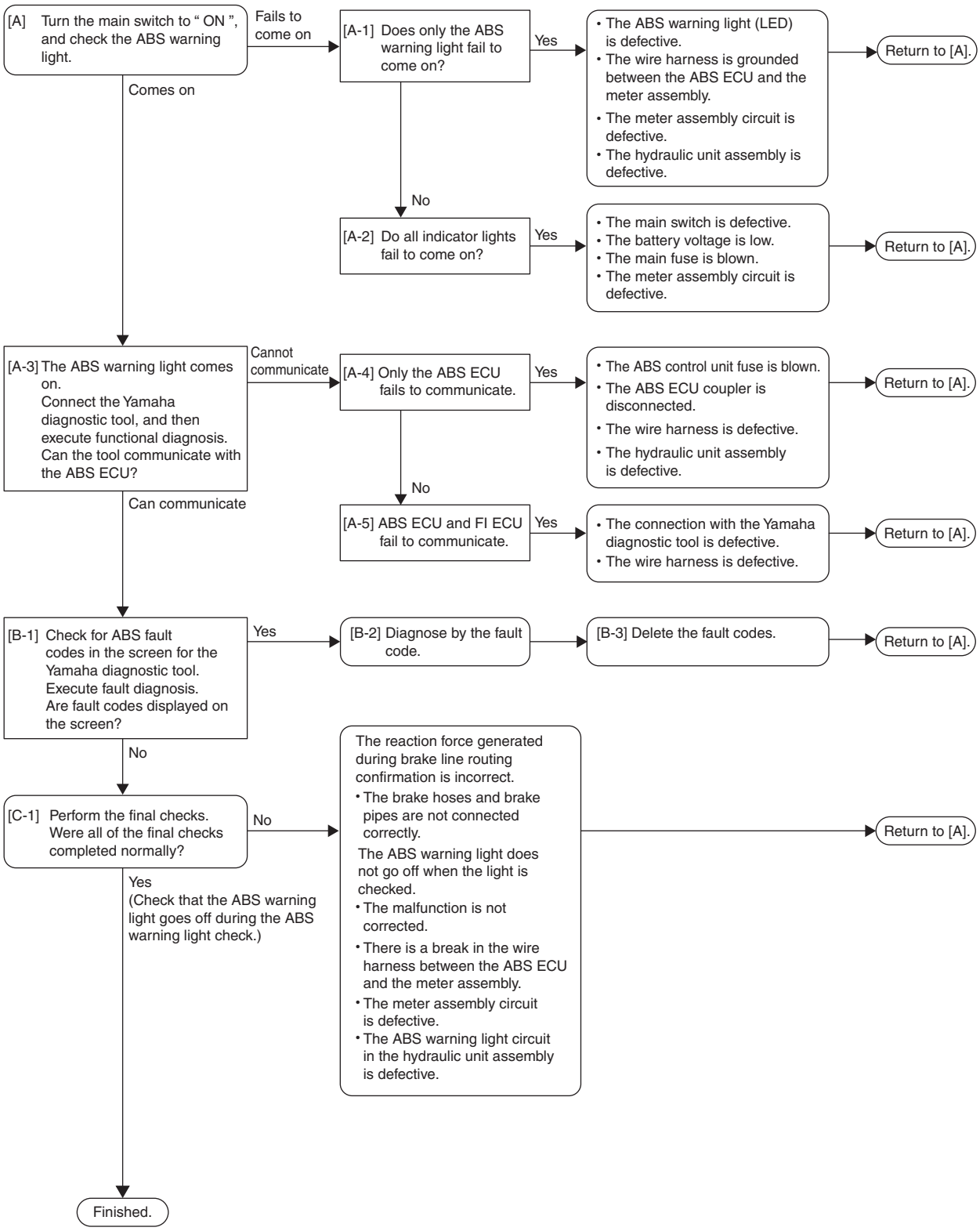

EWA16710

WARNING

When maintenance or checks have been performed on components related to the ABS, be sure to perform a final check before delivering the vehicle to the customer.

TIP

To final check, refer to “[C-1] FINAL CHECK” on page 8-108.

EAS30531
[A] CHECKING THE ABS WARNING LIGHT
Turn the main switch to “ON”. (Do not start the engine.)
1. The ABS warning light does not come on.
   - Only the ABS warning light fails to come on. [A-1]
   - The ABS warning light and all other indicator lights fail to come on. [A-2]
2. The ABS warning light comes on. [A-3]

EAS30532
[A-1] ONLY THE ABS WARNING LIGHT FAILS TO COME ON
1. Check for a short circuit to the ground between the white/blue terminal of the ABS ECU coupler and white/blue terminal of the meter assembly.
   - If there is short circuit to the ground, the wire harness is defective. Replace the wire harness.
2. Disconnect the ABS ECU coupler and check that the ABS warning light comes on when the main switch is turned to “ON”.
   - If the ABS warning light does not come on, the meter assembly circuit (including the ABS warning light [LED]) is defective. Replace the meter assembly.
   - If the ABS warning light comes on, the ABS ECU is defective. Replace the hydraulic unit assembly.

EAS30964
[A-2] ALL INDICATOR LIGHTS FAIL TO COME ON
1. Main switch
   - Check the main switch for continuity.
     Refer to “CHECKING THE SWITCHES” on page 8-113.
   - If there is no continuity, replace the main switch.
2. Battery
   - Check the condition of the battery.
     Refer to “CHECKING AND CHARGING THE BATTERY” on page 8-118.
   - If the battery is defective, clean the battery terminals and recharge it, or replace the battery.
3. Main fuse
   - Check the fuse for continuity.
     Refer to “CHECKING THE FUSES” on page 8-117.
   - If the main fuse is blown, replace the fuse.
4. Circuit
   - Check the meter assembly circuit.
     Refer to “CIRCUIT DIAGRAM” on page 8-77.
   - If the meter assembly circuit is open, replace the wire harness.

EAS31162
[A-3] THE ABS WARNING LIGHT COMES ON
Connect the Yamaha diagnostic tool to the ABS test coupler and execute functional diagnosis. (For information about how to execute functional diagnosis, refer to the operation manual that is included with the tool.)
Check that communication with the ABS ECU is possible.
- Only the ABS ECU fails to communicate. [A-4]
- ABS ECU and FI ECU fail to communicate. [A-5]
- Communication is possible with the ABS ECU. [B-1] (The ABS is displayed on the select unit screen.)

EAS31163
[A-4] ONLY THE ABS ECU FAILS TO COMMUNICATE (The select unit screen does not appear.)
1. ABS control unit fuse
   - Check the ABS control unit fuse for continuity.
     Refer to “CHECKING THE FUSES” on page 8-117.
   - If the ABS control unit fuse is blown, replace the fuse.

2. ABS ECU coupler
   - Check that the ABS ECU coupler is connected properly.
     For information about connecting the ABS ECU coupler properly, refer to “INSTALLING THE HYDRAULIC UNIT ASSEMBLY” on page 4-63.
3. Wire harness
   - Open circuit between the main switch and the ABS ECU, or between the ABS ECU and the ground.
     Check for continuity between brown/red terminal of the main switch coupler and brown/red terminal of the ABS ECU coupler.
     Check for continuity between black/white terminal of the ABS ECU coupler and the ground, and between the black terminal of the ABS ECU coupler and ground.
     If there is no continuity, the wire harness is defective. Replace the wire harness.
   - Open circuit in the wire harness between the ABS ECU coupler and the ABS test coupler.
     Check for continuity between blue/red terminal of the ABS ECU coupler and blue/red terminal of the ABS test coupler.
     Check for continuity between blue/black terminal of the ABS ECU coupler and blue/black terminal of the ABS test coupler.
4. ABS ECU malfunction
   Replace the hydraulic unit assembly.

EAS31164

[A-5] ABS ECU AND FI ECU FAIL TO COMMUNICATE (Cannot connect due to a tool error.)

1. Yamaha diagnostic tool
   Check that the Yamaha diagnostic tool is properly connected.
2. Wire harness
   - Open circuit in the wire harness between the ABS ECU coupler and the ABS test coupler.
     Check for continuity between blue/red terminal of the ABS ECU coupler and blue/red terminal of the ABS test coupler.
     Check for continuity between blue/black terminal of the ABS ECU coupler and blue/black terminal of the ABS test coupler.

EAS31165

[B-1] MALFUNCTION ARE CURRENTLY DETECTED

When the Yamaha diagnostic tool is connected to the ABS test coupler, the fault codes will be displayed on the computer screen.
- A fault code is displayed. [B-2]
- A fault code is not displayed. [C-1]

EAS31166

[B-2] DIAGNOSIS USING THE FAULT CODES

This model uses the Yamaha diagnostic tool to identify malfunctions.
For information about using the Yamaha diagnostic tool, refer to the operation manual that is included with the tool.

	Yamaha diagnostic tool **90890-03231**

Connecting the Yamaha diagnostic tool

Removing the passenger seat. Refer to “GENERAL CHASSIS (1)” on page 4-1.
Removing the protective cap “1”, and then connect the Yamaha diagnostic tool to the coupler.

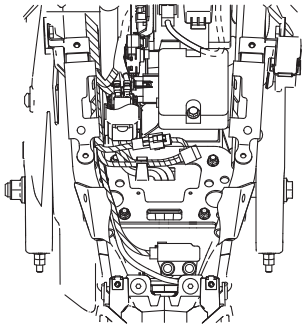

Details about the displayed fault codes are shown in the following chart. Refer to this chart and check the vehicle.
Once all the work is complete, delete the fault codes. [B-3]

TIP

Check the inspection points after terminating the connection with the Yamaha diagnostic tool and turning the main switch off.

Operation of the Yamaha diagnostic tool (Fault diagnosis mode)
Malfunction results are displayed in the top part of the window area.

1. Recovered
   The item list of the malfunction detected in the past (already recovered) are displayed.
2. Detected
   The item list of the malfunction currently occurred are displayed.
3. Code
   The following icons and the fault code numbers for the detected malfunctions are displayed.

EAS31167
[B-3] DELETING THE FAULT CODES

To delete the fault codes, use the Yamaha diagnostic tool. For information about deleting the fault codes, refer to the operation manual of the Yamaha diagnostic tool.
Check that all the displayed fault codes are deleted.

	Yamaha diagnostic tool **90890-03231**

Connecting the Yamaha diagnostic tool

Remove the protective cap “1”, and then connect the Yamaha diagnostic tool to the coupler.

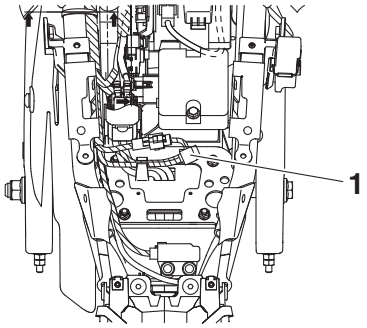

EAS31168
[C-1] FINAL CHECK

Check all the following items to complete the inspection.
If the process is not completed properly, start again from the beginning.

Checking procedures

1. Check the brake fluid level in the brake master cylinder reservoir and brake fluid reservoir.
   Refer to “CHECKING THE BRAKE FLUID LEVEL” on page 3-15.
2. Check the wheel sensors for proper installation.
   Refer to “INSTALLING THE FRONT WHEEL (FRONT BRAKE DISCS)” on page 4-23 and “INSTALLING THE REAR WHEEL (REAR BRAKE DISC)” on page 4-32.
3. Perform brake line routing confirmation.
   Refer to “HYDRAULIC UNIT OPERATION TESTS” on page 4-65.
   If it does not have reaction-force properly, the brake hose is not properly routed or connected.
4. Delete the fault codes.
   Refer to “[B-3] DELETING THE FAULT CODES” on page 8-108.
5. Checking the ABS warning light.
   Check that the ABS warning light goes off.
   If ABS warning light does not come on or if it does not goes off, refer to “CHECKING THE ABS WARNING LIGHT” on page 4-68.
   - The problem is not solved.
   - Open circuit between the ABS ECU and the meter assembly.
     Check for continuity between green/red terminal of the ABS ECU coupler and green/red terminal of the meter assembly coupler.
   - Malfunction in the meter assembly circuit.
   - Malfunction in the ABS warning light circuit in the hydraulic unit assembly.

EAS20089

ELECTRICAL COMPONENTS

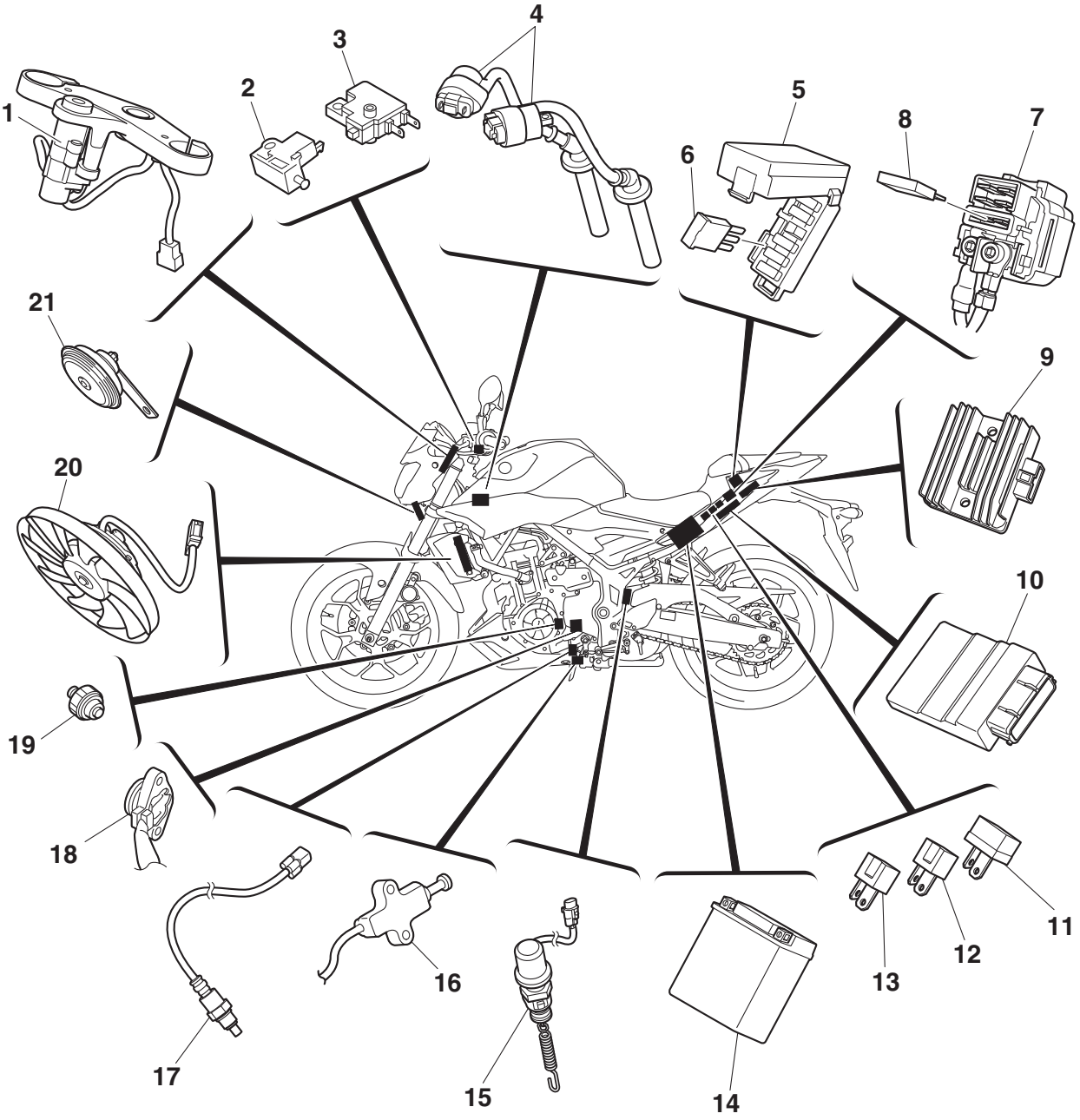

1. Main switch
2. Clutch switch
3. Front brake light switch
4. Ignition coil
5. Fuse box
6. Diode 1
7. Starter relay
8. Main fuse
9. Rectifier/regulator
10. ECU (Engine Control Unit)
11. Diode 2
12. Diode 3
13. Diode 4
14. Battery
15. Rear brake light switch
16. Sidestand switch
17. O_2 sensor
18. Gear position switch
19. Oil pressure switch
20. Radiator fan motor
21. Horn

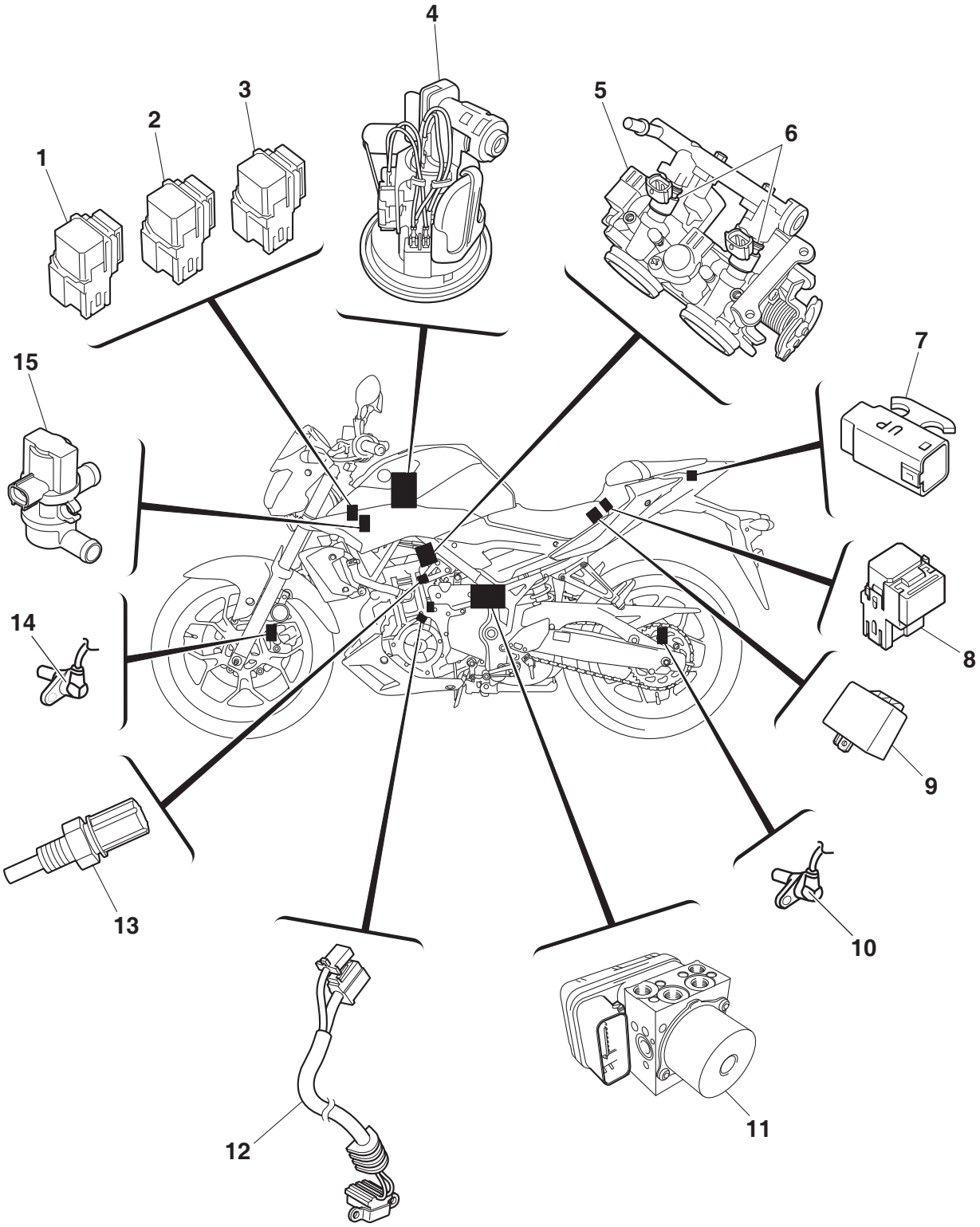
1
2
3
4
5
6
7
UP
8
9
10
11
12
13
14
15

1. Headlight relay
2. Radiator fan motor relay
3. Fuel pump relay
4. Fuel pump
5. Throttle body sensor assembly
6. Fuel injector
7. Lean angle sensor
8. Starting circuit cut-off relay
9. Turn signal relay
10. Rear wheel sensor
11. Hydraulic unit assembly
12. Crankshaft position sensor
13. Coolant temperature sensor
14. Front wheel sensor
15. Air induction system solenoid

EAS30549
CHECKING THE SWITCHES

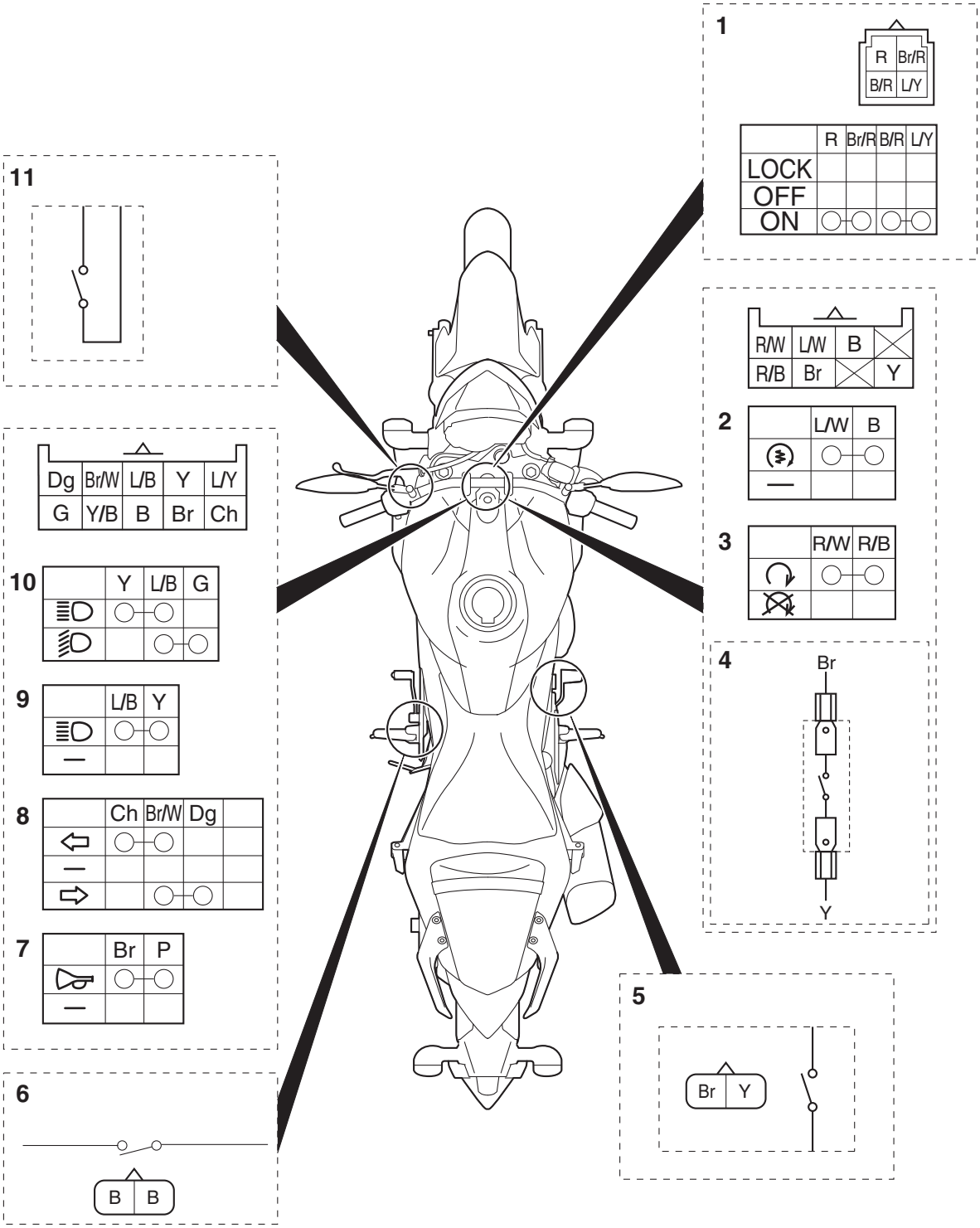

1. Main switch
2. Start switch
3. Engine stop switch
4. Front brake light switch
5. Rear brake light switch
6. Sidestand switch
7. Horn switch
8. Turn signal switch
9. Pass switch
10. Dimmer switch
11. Clutch switch

Check each switch for continuity with the pocket tester. If the continuity reading is incorrect, check the wiring connections and if necessary, replace the switch.

ECA18520

NOTICE

Never insert the tester probes into the coupler terminal slots "a". Always insert the probes from the opposite end of the coupler, taking care not to loosen or damage the leads.

Pocket tester
90890-03112
Analog pocket tester
YU-03112-C

TIP

- Before checking for continuity, set the pocket tester to "0" and to the "Ω × 1" range.
- When checking for continuity, switch back and forth between the switch positions a few times.

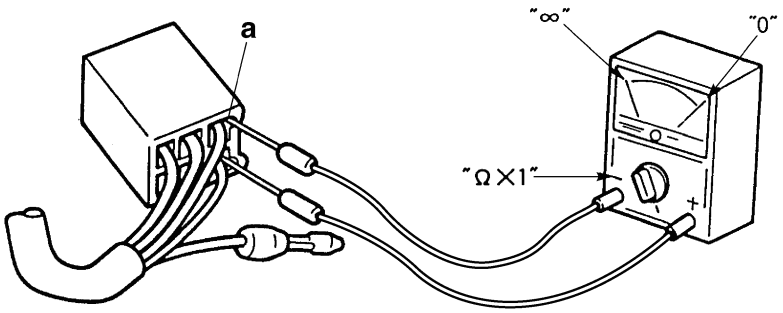

The switches and their terminal connections are illustrated as in the following example of the main switch.
The switch positions "a" are shown in the far left column and the switch lead colors "b" are shown in the top row.
The continuity (i. e., a closed circuit) between switch terminals at a given switch position is indicated by "○——○".
There is continuity between red and brown/red, black/red and blue/yellow when the switch is set to "ON".

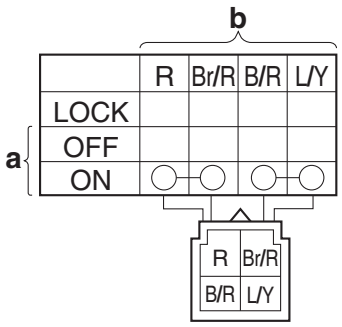

EAS30550
CHECKING THE BULBS AND BULB SOCKETS

TIP

Do not check any of the lights that use LEDs.

Check each bulb and bulb socket for damage or wear, proper connections, and also for continuity between the terminals.
Damage/wear → Repair or replace the bulb, bulb socket or both.
Improperly connected → Properly connect.
No continuity → Repair or replace the bulb, bulb socket or both.

Types of bulbs

The bulbs used on this vehicle are shown in the illustration on the left.

- Bulbs “a” are used for the headlights and usually use a bulb holder that must be detached before removing the bulb. The majority of these types of bulbs can be removed from their respective socket by turning them counterclockwise.
- Bulbs “b” are used for turn signal lights and can be removed from the socket by pushing and turning the bulb counterclockwise.
- Bulbs “c” are used for license plate and can be removed from their respective sockets by carefully pulling them out.

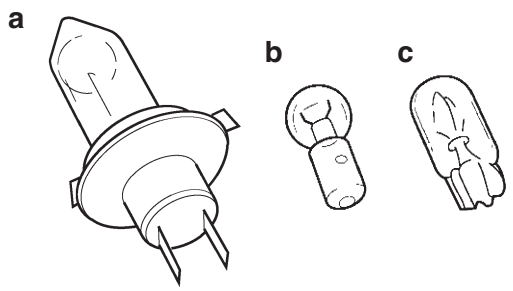

Checking the condition of the bulbs

The following procedure applies to all of the bulbs.

1. Remove:
   - Bulb

EWA13320

WARNING

Since the headlight bulb gets extremely hot, keep flammable products and your hands away from the bulb until it has cooled down.

ECA14381

NOTICE

- **Be sure to hold the socket firmly when removing the bulb. Never pull the lead, otherwise it may be pulled out of the terminal in the coupler.**
- **Avoid touching the glass part of a headlight bulb to keep it free from oil, otherwise the transparency of the glass, the life of the bulb, and the luminous flux will be adversely affected. If the headlight bulb gets soiled, thoroughly clean it with a cloth moistened with alcohol or lacquer thinner.**

2. Check:
   - Bulb (for continuity)
     (with the pocket tester)
     No continuity → Replace.

Pocket tester
90890-03112
Analog pocket tester
YU-03112-C

TIP

Before checking for continuity, set the pocket tester to “0” and to the “Ω × 1” range.

▼▼▼▼▼▼▼▼▼▼▼▼▼▼▼▼▼▼▼▼▼▼▼▼▼▼▼▼▼▼▼▼▼▼

a. Connect the positive tester probe to terminal “1” and the negative tester probe to terminal “2”, and check the continuity.
b. If reading indicate no continuity, replace the bulb.

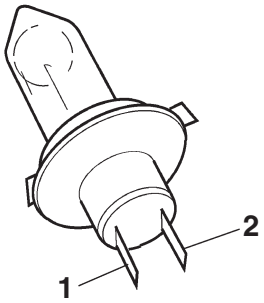

▲▲▲▲▲▲▲▲▲▲▲▲▲▲▲▲▲▲▲▲▲▲▲▲▲▲▲▲▲▲▲▲▲▲

Checking the condition of the bulb sockets

The following procedure applies to all of the bulb sockets.

1. Check:
   - Bulb socket (for continuity)
     (with the pocket tester)
     No continuity → Replace.

Pocket tester
90890-03112
Analog pocket tester
YU-03112-C

TIP

Check each bulb socket for continuity in the same manner as described in the bulb section; however, note the following.

▼▼▼▼▼▼▼▼▼▼▼▼▼▼▼▼▼▼▼▼▼▼▼▼▼▼▼▼▼▼▼▼▼▼

a. Install a good bulb into the bulb socket.
b. Connect the pocket tester probes to the respective leads of the bulb socket.
c. Check the bulb socket for continuity. If any of the readings indicate no continuity, replace the bulb socket.

▲▲▲▲▲▲▲▲▲▲▲▲▲▲▲▲▲▲▲▲▲▲▲▲▲▲▲▲▲▲▲▲▲▲

EAS30551

CHECKING THE FUSES

The following procedure applies to all of the fuses.

ECA13680

NOTICE

To avoid a short circuit, always set the main switch to "OFF" when checking or replacing a fuse.

1. Remove:
   - Passenger seat
   - Center cover
   Refer to "GENERAL CHASSIS (1)" on page 4-1.
2. Check:
   - Fuse

▼▼▼▼▼▼▼▼▼▼▼▼▼▼▼▼▼▼▼▼▼▼▼▼▼▼▼▼▼▼▼▼▼▼

a. Connect the pocket tester to the fuse and check the continuity.

TIP

Set the pocket tester selector to "Ω × 1".

Pocket tester
90890-03112
Analog pocket tester
YU-03112-C

b. If the pocket tester indicates "∞", replace the fuse.

▲▲▲▲▲▲▲▲▲▲▲▲▲▲▲▲▲▲▲▲▲▲▲▲▲▲▲▲▲▲▲▲▲▲

3. Replace:
   - Blown fuse

▼▼▼▼▼▼▼▼▼▼▼▼▼▼▼▼▼▼▼▼▼▼▼▼▼▼▼▼▼▼▼▼▼▼

a. Set the main switch to "OFF".
b. Install a new fuse of the correct amperage rating.
c. Set on the switches to verify if the electrical circuit is operational.
d. If the fuse immediately blows again, check the electrical circuit.

Fuses	Amperage rating	Q'ty
Main	30 A	1
Ignition	15 A	1
Headlight	15 A	1
ABS solenoid	15 A	1
ABS motor	30 A	1
ABS control unit	7.5 A	1
Signaling system	7.5 A	1
Radiator fan motor	7.5 A	1
Backup	7.5 A	1
Spare	30 A	2
Spare	15 A	1
Spare	7.5 A	1

EWA13310

WARNING

Never use a fuse with an amperage rating other than that specified. Improvising or using a fuse with the wrong amperage rating may cause extensive damage to the electrical system, cause the lighting and ignition systems to malfunction and could possibly cause a fire.

▲▲▲▲▲▲▲▲▲▲▲▲▲▲▲▲▲▲▲▲▲▲▲▲▲▲▲▲▲▲▲▲▲▲

4. Install:
   - Center cover
   - Passenger seat
   Refer to"GENERAL CHASSIS (1)" on page 4-1.

EAS31006

REPLACING THE ECU (engine control unit)

1. Turn the main switch to "OFF".
2. Replace the ECU (engine control unit).
   Refer to "REMOVING THE ECU (engine control unit)" on page 8-118.
   Refer to "INSTALLING THE ECU (engine control unit)" on page 8-118.
3. Clean the ISC (idle speed control).
   Refer to "CHECKING THE THROTTLE BODIES AND ISC (IDLE SPEED CONTROL) UNIT" on page 7-8.

4. Check:
   - Engine idling speed
     Start the engine, warm it up, and then measure the engine idling speed.

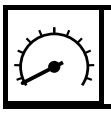	**Engine idling speed** **1300–1500 r/min**

EAS31319

REMOVING THE ECU (engine control unit)

1. Disconnect:
   - ECU coupler “1”

TIP

While pushing the portion “a” of the ECU coupler, move the lock lever “b” in the direction of the arrow shown to disconnect the coupler.

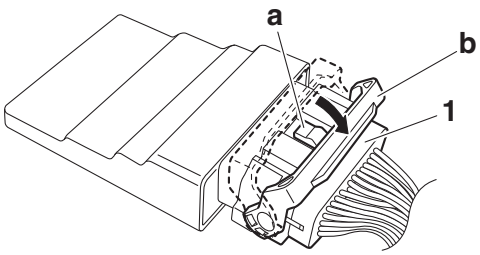

EAS31320

INSTALLING THE ECU (engine control unit)

1. Connect:
   - ECU coupler “1”

TIP

Connect the ECU coupler, and then push the lock lever “a” of the coupler in the direction of the arrow shown.

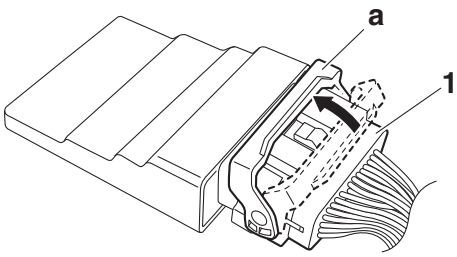

EAS30552

CHECKING AND CHARGING THE BATTERY

EWA13290

WARNING

Batteries generate explosive hydrogen gas and contain electrolyte which is made of poisonous and highly caustic sulfuric acid. Therefore, always follow these preventive measures:

- **Wear protective eye gear when handling or working near batteries.**
- **Charge batteries in a well-ventilated area.**
- **Keep batteries away from fire, sparks or open flames (e.g., welding equipment, lighted cigarettes).**
- **DO NOT SMOKE when charging or handling batteries.**
- **KEEP BATTERIES AND ELECTROLYTE OUT OF REACH OF CHILDREN.**
- **Avoid bodily contact with electrolyte as it can cause severe burns or permanent eye injury.**

FIRST AID IN CASE OF BODILY CONTACT:
EXTERNAL

- **Skin — Wash with water.**
- **Eyes — Flush with water for 15 minutes and get immediate medical attention.**

INTERNAL

- **Drink large quantities of water or milk followed with milk of magnesia, beaten egg or vegetable oil. Get immediate medical attention.**

ECA13661

NOTICE

- **This is a VRLA (Valve Regulated Lead Acid) battery. Never remove the sealing caps because the balance between cells will not be maintained and battery performance will deteriorate.**
- **Charging time, charging amperage and charging voltage for a VRLA (Valve Regulated Lead Acid) battery are different from those of conventional batteries. The VRLA (Valve Regulated Lead Acid) battery should be charged according to the appropriate charging method. If the battery is overcharged, the electrolyte level will drop considerably. Therefore, take special care when charging the battery.**

TIP

Since VRLA (Valve Regulated Lead Acid) batteries are sealed, it is not possible to check the charge state of the battery by measuring the

specific gravity of the electrolyte. Therefore, the charge of the battery has to be checked by measuring the voltage at the battery terminals.

1. Remove:
   - Passenger seat
   - Center cover
   - Rider seat

   Refer to "GENERAL CHASSIS (1)" on page 4-1.
2. Disconnect:
   - Battery leads

   (from the battery terminals)

ECA13640

NOTICE

First, disconnect the negative battery lead "1", and then positive battery lead "2".

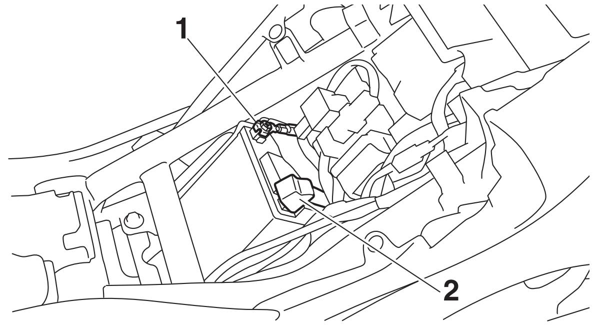

3. Remove:
   - Battery

   Refer to "GENERAL CHASSIS (1)" on page 4-1.
4. Check:
   - Battery charge

▼▼▼▼▼▼▼▼▼▼▼▼▼▼▼▼▼▼▼▼▼▼▼▼▼▼▼▼▼▼▼▼▼▼▼

a. Connect a pocket tester to the battery terminals.

• Positive tester probe → positive battery terminal • Negative tester probe → negative battery terminal

TIP

- The charge state of a VRLA (Valve Regulated Lead Acid) battery can be checked by measuring its open-circuit voltage (i.e., the voltage when the positive battery terminal is disconnected).
- No charging is necessary when the open-circuit voltage equals or exceeds 12.8 V.

b. Check the charge of the battery, as shown in the charts and the following example.

Example Open-circuit voltage = 12.0 V Charging time = 6.5 hours Charge of the battery = 20–30%

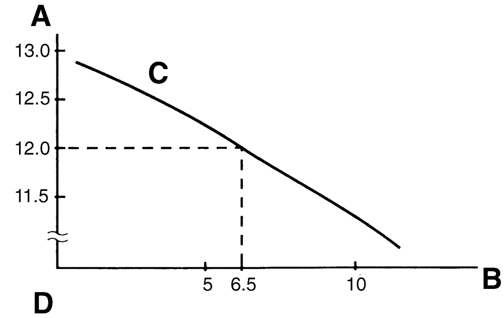

A. Open-circuit voltage (V)
B. Charging time (hours)
C. Relationship between the open-circuit voltage and the charging time at 20 °C (68 °F)
D. These values vary with the temperature, the condition of the battery plates, and the electrolyte level.

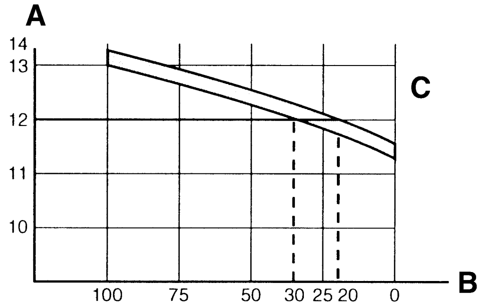

A. Open-circuit voltage (V)
B. Charging condition of the battery (%)
C. Ambient temperature 20 °C (68 °F)

▲▲▲▲▲▲▲▲▲▲▲▲▲▲▲▲▲▲▲▲▲▲▲▲▲▲▲▲▲▲▲▲▲▲▲

5. Charge:
   - Battery

   (refer to the appropriate charging method)

EWA13300

WARNING

Do not quick charge a battery.

ECA13671

NOTICE

- **Do not use a high-rate battery charger since it forces a high-amperage current into the battery quickly and can cause battery overheating and battery plate damage.**
- **If it is impossible to regulate the charging current on the battery charger, be careful not to overcharge the battery.**

- **When charging a battery, be sure to remove it from the vehicle. (If charging has to be done with the battery mounted on the vehicle, disconnect the negative battery lead from the battery terminal.)**
- **To reduce the chance of sparks, do not plug in the battery charger until the battery charger leads are connected to the battery.**
- **Before removing the battery charger lead clips from the battery terminals, be sure to turn off the battery charger.**
- **Make sure the battery charger lead clips are in full contact with the battery terminal and that they are not shorted. A corroded battery charger lead clip may generate heat in the contact area and a weak clip spring may cause sparks.**
- **If the battery becomes hot to the touch at any time during the charging process, disconnect the battery charger and let the battery cool before reconnecting it. Hot batteries can explode!**
- **As shown in the following illustration, the open-circuit voltage of a VRLA (Valve Regulated Lead Acid) battery stabilizes about 30 minutes after charging has been completed. Therefore, wait 30 minutes after charging is completed before measuring the open-circuit voltage.**

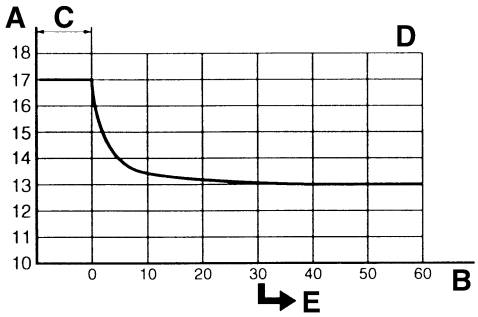

A. Open-circuit voltage (V)
B. Time (minutes)
C. Charging
D. Ambient temperature 20 °C (68 °F)
E. Check the open-circuit voltage.

▼▼▼▼▼▼▼▼▼▼▼▼▼▼▼▼▼▼▼▼▼▼▼▼▼▼▼▼▼▼▼▼▼▼

Charging method using a variable-current (voltage) charger

a. Measure the open-circuit voltage prior to charging.

TIP

Voltage should be measured 30 minutes after the engine is stopped.

b. Connect a charger and ammeter to the battery and start charging.

TIP

Set the charging voltage to 16–17 V. If the setting is lower, charging will be insufficient. If too high, the battery will be over-charged.

c. Make sure that the current is higher than the standard charging current written on the battery.

TIP

If the current is lower than the standard charging current written on the battery, set the charging voltage adjust dial at 20–24 V and monitor the amperage for 3–5 minutes to check the battery.

- Standard charging current is reached
  Battery is good.
- Standard charging current is not reached
  Replace the battery.

d. Adjust the voltage so that the current is at the standard charging level.
e. Set the time according to the charging time suitable for the open-circuit voltage.
f. If charging requires more than 5 hours, it is advisable to check the charging current after a lapse of 5 hours. If there is any change in the amperage, readjust the voltage to obtain the standard charging current.
g. Measure the battery open-circuit voltage after leaving the battery unused for more than 30 minutes.

12.8 V or more --- Charging is complete.
12.7 V or less --- Recharging is required.
Under 12.0 V --- Replace the battery.

▲▲▲▲▲▲▲▲▲▲▲▲▲▲▲▲▲▲▲▲▲▲▲▲▲▲▲▲▲▲▲▲▲▲

▼▼▼▼▼▼▼▼▼▼▼▼▼▼▼▼▼▼▼▼▼▼▼▼▼▼▼▼▼▼▼▼▼▼

Charging method using a constant voltage charger

a. Measure the open-circuit voltage prior to charging.

TIP

Voltage should be measured 30 minutes after the engine is stopped.

b. Connect a charger and ammeter to the battery and start charging.

c. Make sure that the current is higher than the standard charging current written on the battery.

TIP

If the current is lower than the standard charging current written on the battery, this type of battery charger cannot charge the VRLA (Valve Regulated Lead Acid) battery. A variable voltage charger is recommended.

d. Charge the battery until the battery's charging voltage is 15 V.

TIP

Set the charging time at 20 hours (maximum).

e. Measure the battery open-circuit voltage after leaving the battery unused for more than 30 minutes.

12.8 V or more --- Charging is complete. 12.7 V or less --- Recharging is required. Under 12.0 V --- Replace the battery.

▲▲▲▲▲▲▲▲▲▲▲▲▲▲▲▲▲▲▲▲▲▲▲▲▲▲▲▲▲▲▲▲▲▲

6. Install:
   - Battery
     Refer to "GENERAL CHASSIS (1)" on page 4-1.
7. Connect:
   - Battery leads
     (to the battery terminals)

ECA13630

NOTICE

First, connect the positive battery lead "1", and then the negative battery lead "2".

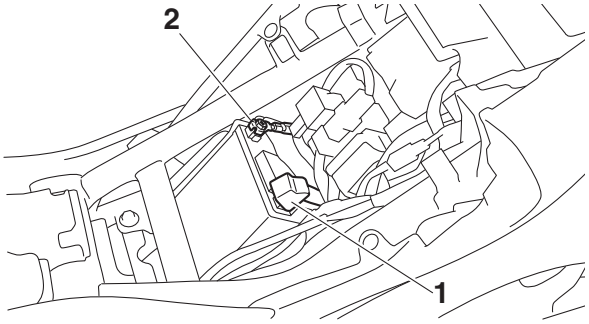

8. Check:
   - Battery terminals
     Dirt → Clean with a wire brush.
     Loose connection → Connect properly.
9. Lubricate:
   - Battery terminals

	Recommended lubricant **Dielectric grease**

10. Install:
    - Rider seat
    - Center cover
    - Passenger seat
      Refer to "GENERAL CHASSIS (1)" on page 4-1.

EAS30553

CHECKING THE RELAYS

Check each switch for continuity with the pocket tester. If the continuity reading is incorrect, replace the relay.

	Pocket tester **90890-03112** **Analog pocket tester** **YU-03112-C**

1. Disconnect the relay from the wire harness.
2. Connect the pocket tester (Ω × 1) and battery (12 V) to the relay terminal as shown.
   Check the relay operation.
   Out of specification → Replace.

Starter relay

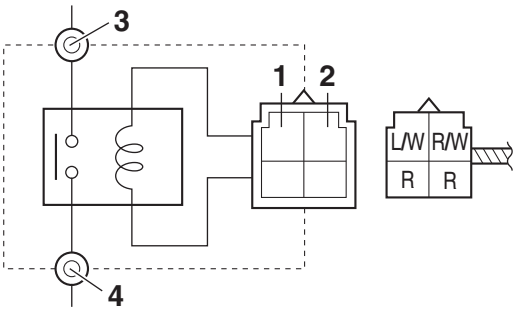

1. Positive battery terminal
2. Negative battery terminal
3. Positive tester probe
4. Negative tester probe

	Relay operation **Continuity** **(between "3" and "4")**

Starting circuit cut-off relay

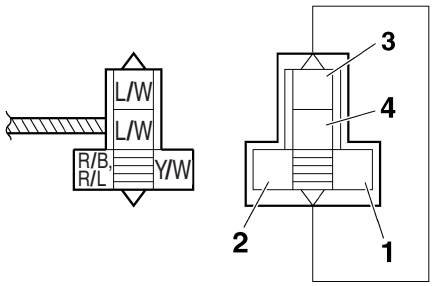

1. Positive battery terminal
2. Negative battery terminal
3. Positive tester probe
4. Negative tester probe

Result
Continuity
(between "3" and "4")

Headlight relay

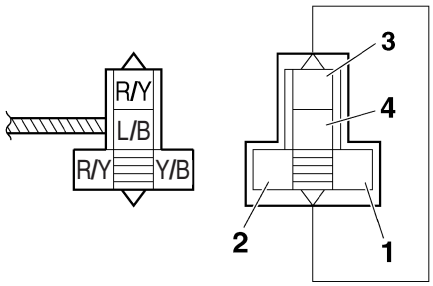

1. Positive battery terminal
2. Negative battery terminal
3. Positive tester probe
4. Negative tester probe

Result
Continuity
(between "3" and "4")

Radiator fan motor relay

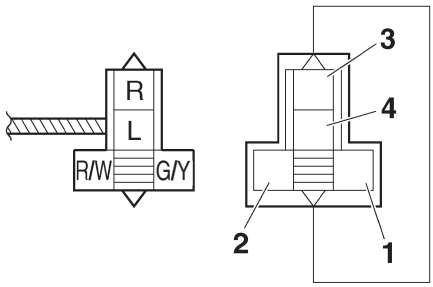

1. Positive battery terminal
2. Negative battery terminal
3. Positive tester probe
4. Negative tester probe

Result
Continuity
(between "3" and "4")

Turn signal relay

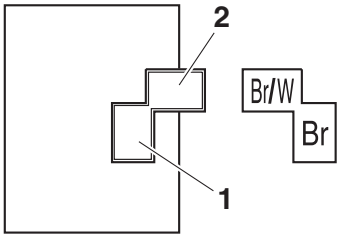

1. Positive battery lead
2. Negative battery lead

Result
Relay operate → OK
Relay do not operate → Replace.

EAS30555

CHECKING THE DIODES

1. Check:
   - Diodes
     Out of specification → Replace.

Pocket tester
90890-03112
Analog pocket tester
YU-03112-C

TIP

The pocket tester or the analog pocket tester readings are shown in the following table.

Diode 1
- **Continuity**
  - **Positive tester probe → sky blue "1"**
  - **Negative tester probe → blue/yellow "2"**
- **Continuity**
  - **Positive tester probe → sky blue "1"**
  - **Negative tester probe → yellow/black "3"**
- **No continuity**
  - **Positive tester probe → blue/yellow "2"**
  - **Negative tester probe → sky blue "1"**
- **No continuity**
  - **Positive tester probe → yellow/black "3"**
  - **Negative tester probe → sky blue "1"**

Diode 3
- **Continuity**
  - **Positive tester probe → black "4"**
  - **Negative tester probe → blue/yellow "5"**
- **No continuity**
  - **Positive tester probe → blue/yellow "5"**
  - **Negative tester probe → black "4"**

Diode 4
- **Continuity**
  - **Positive tester probe → black/yellow, yellow/black "6"**
  - **Negative tester probe → yellow/white "7"**
- **No continuity**
  - **Positive tester probe → yellow/white "7"**
  - **Negative tester probe → black/yellow, yellow/black "6"**

A

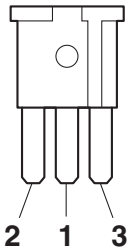

B

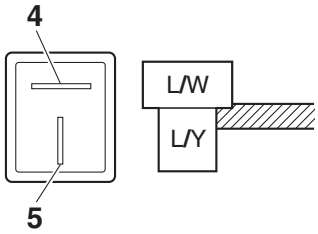

C

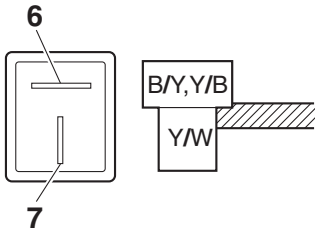

A. Diode 1
B. Diode 3
C. Diode 4

▼▼▼▼▼▼▼▼▼▼▼▼▼▼▼▼▼▼▼▼▼▼▼▼▼▼▼▼▼▼▼▼▼▼

a. Disconnect the diode from the wire harness.
b. Connect the pocket tester (Ω × 1) to the diode terminals as shown.
c. Check the diode for continuity.
d. Check the diode for no continuity.

▲▲▲▲▲▲▲▲▲▲▲▲▲▲▲▲▲▲▲▲▲▲▲▲▲▲▲▲▲▲▲▲▲▲

EAS30557

CHECKING THE SPARK PLUG CAPS

The following procedure applies to all of the spark plug caps.

1. Check:
   - Spark plug cap resistance
     Out of specification → Replace.

Resistance
3.75–6.25 kΩ

▼▼▼▼▼▼▼▼▼▼▼▼▼▼▼▼▼▼▼▼▼▼▼▼▼▼▼▼▼▼▼▼▼▼

a. Remove the spark plug cap from the spark plug lead.
b. Connect the pocket tester (Ω × 1 k) to the spark plug cap as shown.

Pocket tester
90890-03112
Analog pocket tester
YU-03112-C

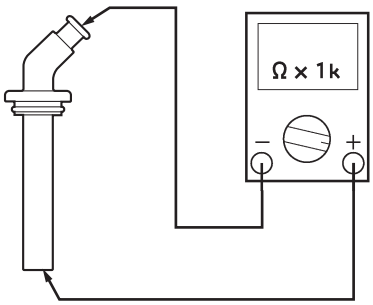

c. Measure the spark plug cap resistance.

▲▲▲▲▲▲▲▲▲▲▲▲▲▲▲▲▲▲▲▲▲▲▲▲▲▲▲▲▲▲▲▲

EAS30558

CHECKING THE IGNITION COILS

The following procedure applies to all of the ignition coils.

1. Check:
   - Primary coil resistance
     Out of specification → Replace.

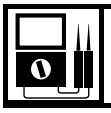

Primary coil resistance
2.16–2.64 Ω

▼▼▼▼▼▼▼▼▼▼▼▼▼▼▼▼▼▼▼▼▼▼▼▼▼▼▼▼▼▼▼▼

a. Disconnect the ignition coil connectors from the ignition coil terminals.
b. Connect the pocket tester (Ω × 1) to the ignition coil as shown.

Pocket tester
90890-03112
Analog pocket tester
YU-03112-C

- Positive tester probe → red/black “1”
- Negative tester probe → orange or gray/red “2”

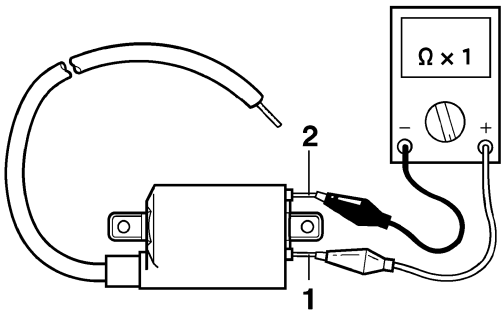

c. Measure the primary coil resistance.

▲▲▲▲▲▲▲▲▲▲▲▲▲▲▲▲▲▲▲▲▲▲▲▲▲▲▲▲▲▲▲▲

2. Check:
   - Secondary coil resistance
     Out of specification → Replace.

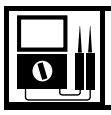

Secondary coil resistance
8.64–12.96 kΩ

▼▼▼▼▼▼▼▼▼▼▼▼▼▼▼▼▼▼▼▼▼▼▼▼▼▼▼▼▼▼▼▼

a. Disconnect the spark plug cap from the ignition coil.
b. Connect the pocket tester (Ω × 1 k) to the ignition coil as shown.

Pocket tester
90890-03112
Analog pocket tester
YU-03112-C

- Positive tester probe → red/black “1”
- Negative tester probe → spark plug lead “2”

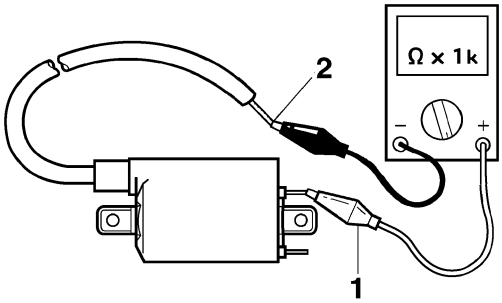

c. Measure the secondary coil resistance.

▲▲▲▲▲▲▲▲▲▲▲▲▲▲▲▲▲▲▲▲▲▲▲▲▲▲▲▲▲▲▲▲

EAS30556

CHECKING THE IGNITION SPARK GAP

1. Check:
   - Ignition spark gap
     Out of specification → Perform the ignition system troubleshooting, starting with step 5. Refer to “TROUBLESHOOTING” on page 8-4.

Minimum ignition spark gap
6.0 mm (0.24 in)

TIP

If the ignition spark gap is within specification, the ignition system circuit is operating normally.

▼▼▼▼▼▼▼▼▼▼▼▼▼▼▼▼▼▼▼▼▼▼▼▼▼▼▼▼▼▼▼▼

a. Disconnect the spark plug cap from the spark plug.
b. Connect the ignition checker “1” as shown.

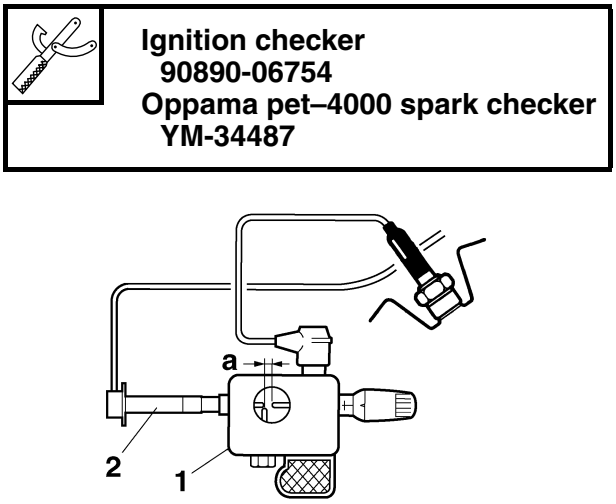

2. Spark plug cap

c. Turn the main switch to “ON” and set the engine stop switch to “◯”.
d. Measure the ignition spark gap “a”.
e. Crank the engine by pushing the start switch “⊛” and gradually increase the spark gap until a misfire occurs.

▲▲▲▲▲▲▲▲▲▲▲▲▲▲▲▲▲▲▲▲▲▲▲▲▲▲▲▲▲▲▲▲

EAS30560

CHECKING THE CRANKSHAFT POSITION SENSOR

1. Disconnect:
   - Crankshaft position sensor coupler (from the wire harness)
2. Check:
   - Crankshaft position sensor resistance
     Out of specification → Replace the stator coil assembly (Stator coil/Crankshaft position sensor).

Crankshaft position sensor resistance
192–288 Ω

▼▼▼▼▼▼▼▼▼▼▼▼▼▼▼▼▼▼▼▼▼▼▼▼▼▼▼▼▼▼▼▼

a. Connect the pocket tester (Ω × 100) to the crankshaft position sensor coupler as shown.

Pocket tester
90890-03112
Analog pocket tester
YU-03112-C

- Positive tester probe
  blue/yellow “1”
- Negative tester probe
  green “2”

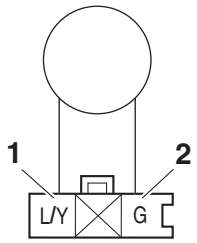

b. Measure the crankshaft position sensor resistance.

▲▲▲▲▲▲▲▲▲▲▲▲▲▲▲▲▲▲▲▲▲▲▲▲▲▲▲▲▲▲▲▲

EAS30561

CHECKING THE LEAN ANGLE SENSOR

1. Remove:
   - Lean angle sensor
2. Check:
   - Lean angle sensor output voltage
     Out of specification → Replace.

Lean angle sensor output voltage
Less than 45°: 0.4–1.4 V
More than 45°: 3.7–4.4 V

▼▼▼▼▼▼▼▼▼▼▼▼▼▼▼▼▼▼▼▼▼▼▼▼▼▼▼▼▼▼▼▼

a. Connect the test harness– lean angle sensor (6P) “1” to the lean angle sensor and wire harness as shown.
b. Connect the pocket tester (DC 20 V) to the test harness– lean angle sensor (6P).

Pocket tester
90890-03112
Analog pocket tester
YU-03112-C
Test harness– lean angle sensor (6P)
90890-03209
Test harness– lean angle sensor (6P)
YU-03209

- Positive tester probe
  yellow/green (wire harness color)
- Negative tester probe
  black/blue (wire harness color)

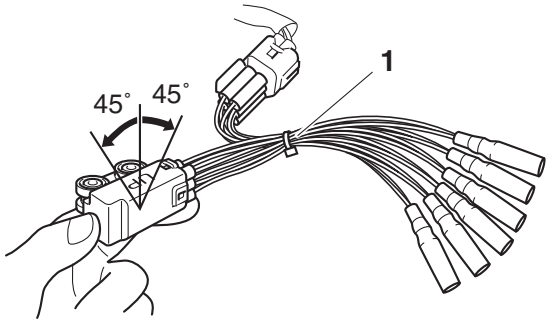

c. Set the main switch to “ON”.
d. Turn the lean angle sensor to 45°.
e. Measure the lean angle sensor output voltage.

▲▲▲▲▲▲▲▲▲▲▲▲▲▲▲▲▲▲▲▲▲▲▲▲▲▲▲▲▲▲▲▲

EAS30562

CHECKING THE STARTER MOTOR OPERATION

1. Check:
   - Starter motor operation
     Does not operate → Perform the electric starting system troubleshooting, starting with step 4.
     Refer to “TROUBLESHOOTING” on page 8-10.

▼▼▼▼▼▼▼▼▼▼▼▼▼▼▼▼▼▼▼▼▼▼▼▼▼▼▼▼▼▼▼▼

a. Connect the positive battery terminal “1” and starter motor lead “2” with a jumper lead “3”.

EWA13810

WARNING

- **A wire that is used as a jumper lead must have at least the same capacity of the battery lead, otherwise the jumper lead may burn.**
- **This check is likely to produce sparks, therefore, make sure no flammable gas or fluid is in the vicinity.**

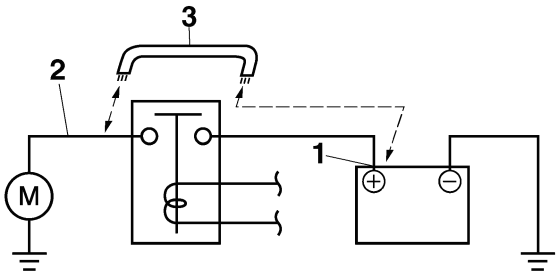

b. Check the starter motor operation.

▲▲▲▲▲▲▲▲▲▲▲▲▲▲▲▲▲▲▲▲▲▲▲▲▲▲▲▲▲▲▲▲

EAS30566

CHECKING THE STATOR COIL

1. Disconnect:
   - Stator coil coupler
     (from the wire harness)
2. Check:
   - Stator coil resistance
     Out of specification → Replace the stator coil assembly (Stator coil/Crankshaft position sensor).

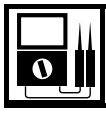

Stator coil resistance
0.216–0.324 Ω (W-W)

▼▼▼▼▼▼▼▼▼▼▼▼▼▼▼▼▼▼▼▼▼▼▼▼▼▼▼▼▼▼▼▼

a. Connect the digital circuit tester to the stator coil coupler as shown.

Digital circuit tester
90890-03174
Model 88 Multimeter with tachometer
YU-A1927

- Positive tester probe
  white “1”
- Negative tester probe
  white “2”

- Positive tester probe
  white “1”
- Negative tester probe
  white “3”

- Positive tester probe
  white “2”
- Negative tester probe
  white “3”

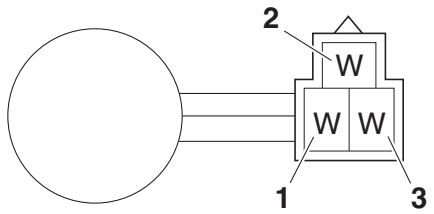

b. Measure the stator coil resistance.

▲▲▲▲▲▲▲▲▲▲▲▲▲▲▲▲▲▲▲▲▲▲▲▲▲▲▲▲▲▲▲▲

EAS30680

CHECKING THE RECTIFIER/REGULATOR

1. Check:
   - Charging voltage
     Out of specification → Replace the rectifier/regulator.

Charging voltage
14.1–14.9 V at 5000 r/min

▼▼▼▼▼▼▼▼▼▼▼▼▼▼▼▼▼▼▼▼▼▼▼▼▼▼▼▼▼▼▼▼▼▼

a. Connect the pocket tester (DC 20 V) to the battery terminals as shown.

Pocket tester
90890-03112
Analog pocket tester
YU-03112-C

- Positive tester probe
  Positive battery terminal “1”
- Negative tester probe
  Negative battery terminal “2”

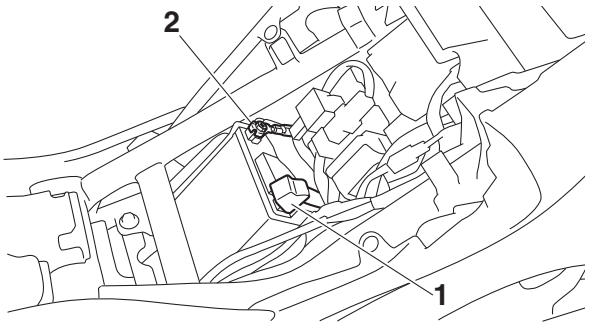

b. Start the engine and let it run at approximately 5000 r/min.
c. Measure the charging voltage.

▲▲▲▲▲▲▲▲▲▲▲▲▲▲▲▲▲▲▲▲▲▲▲▲▲▲▲▲▲▲▲▲▲▲

EAS30573

CHECKING THE FUEL SENDER

1. Disconnect:
   - Fuel pump coupler
     (from the fuel pump)
2. Remove:
   - Fuel tank
3. Remove:
   - Fuel pump
     (from the fuel tank)
4. Check:
   - Fuel sender resistance
     Out of specification → Replace the fuel pump assembly.

Sender unit resistance (full)
10.0–14.0 Ω
Sender unit resistance (empty)
267.0–273.0 Ω

▼▼▼▼▼▼▼▼▼▼▼▼▼▼▼▼▼▼▼▼▼▼▼▼▼▼▼▼▼▼▼▼▼▼

a. Connect the pocket tester (Ω × 10/ × 100) to the fuel sender terminals as shown.

Pocket tester
90890-03112
Analog pocket tester
YU-03112-C

- Positive tester probe
  Fuel pump terminal “1”
- Negative tester probe
  Fuel pump terminal “2”

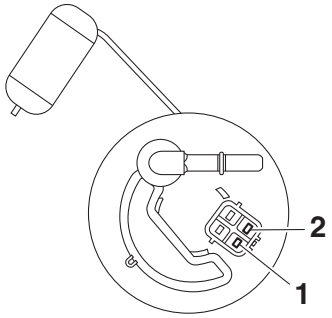

b. Move the fuel sender float to minimum “3” and maximum “4” level position.

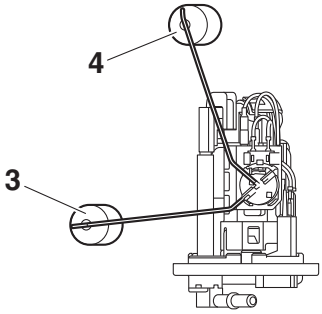

c. Measure the fuel sender resistance.

▲▲▲▲▲▲▲▲▲▲▲▲▲▲▲▲▲▲▲▲▲▲▲▲▲▲▲▲▲▲▲▲▲▲

EAS31372

CHECKING THE FUEL METER

This model is equipped with a self-diagnosis device for the fuel level detection circuit.

1. Check:
   - Fuel meter “1”
     (Turn the main switch to “ON”.)
     Warning light comes on for a few seconds, then goes off → Warning light is OK.
     Warning light does not come on → Replace the meter assembly.
     Warning light flashes eight times, then goes off for 3 seconds in a repeated cycle (malfunction detected in fuel sender) → Replace the fuel pump assembly.

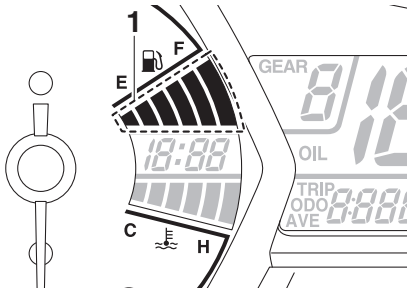

EAS30577

CHECKING THE RADIATOR FAN MOTOR

1. Check:
   - Radiator fan motor
     Faulty/rough movement → Replace.

▼▼▼▼▼▼▼▼▼▼▼▼▼▼▼▼▼▼▼▼▼▼▼▼▼▼▼▼▼▼▼▼▼▼

a. Disconnect the radiator fan motor coupler from the wire harness.
b. Connect the battery (DC 12 V) as shown.

- Positive tester probe
  blue "1"
- Negative tester probe
  black "2"

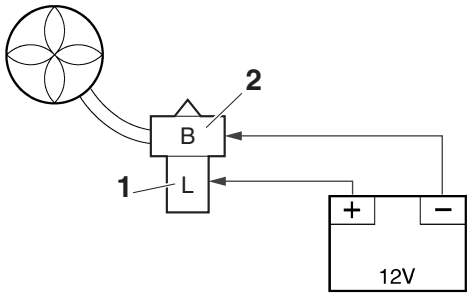

c. Measure the radiator fan motor movement.

▲▲▲▲▲▲▲▲▲▲▲▲▲▲▲▲▲▲▲▲▲▲▲▲▲▲▲▲▲▲▲▲▲▲

EAS30578

CHECKING THE COOLANT TEMPERATURE SENSOR

1. Remove:
   - Coolant temperature sensor
     Refer to "CYLINDER HEAD" on page 5-22.

EWA14130

WARNING

- **Handle the coolant temperature sensor with special care.**
- **Never subject the coolant temperature sensor to strong shocks. If the coolant temperature sensor is dropped, replace it.**

2. Check:
   - Coolant temperature sensor resistance
     Out of specification → Replace.

Coolant temperature sensor resistance
2521–2786 Ω at 20 °C (2521–2786 Ω at 68 °F)
Coolant temperature sensor resistance
210–220 Ω at 100 °C (210–220 Ω at 212 °F)

▼▼▼▼▼▼▼▼▼▼▼▼▼▼▼▼▼▼▼▼▼▼▼▼▼▼▼▼▼▼▼▼▼▼

a. Connect the pocket tester (Ω × 1 k) to the coolant temperature sensor as shown.

Pocket tester
90890-03112
Analog pocket tester
YU-03112-C

b. Immerse the coolant temperature sensor "1" in a container filled with coolant "2".

TIP

Make sure the coolant temperature sensor terminals do not get wet.

c. Place a thermometer "3" in the coolant.

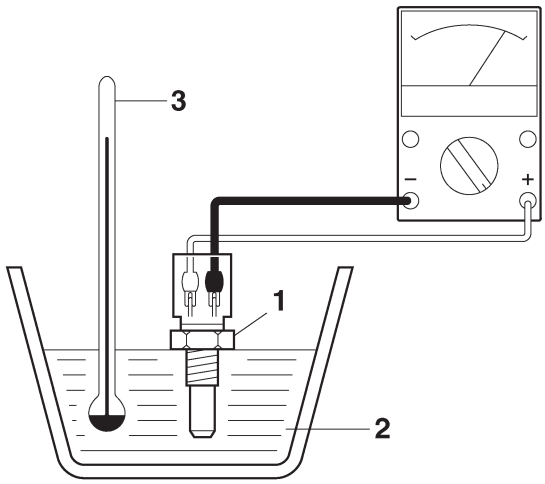

d. Heat the coolant or let it cool down to the specified temperatures.
e. Measure the coolant temperature sensor resistance.

▲▲▲▲▲▲▲▲▲▲▲▲▲▲▲▲▲▲▲▲▲▲▲▲▲▲▲▲▲▲▲▲▲▲

3. Install:
   - Coolant temperature sensor

Coolant temperature sensor
15 Nm (1.5 m·kgf, 11 ft·lbf)

EAS30587

CHECKING THE AIR INDUCTION SYSTEM SOLENOID

1. Check:
   - Air induction system solenoid resistance
     Out of specification → Replace.

Solenoid resistance
18–22 Ω

▼▼▼▼▼▼▼▼▼▼▼▼▼▼▼▼▼▼▼▼▼▼▼▼▼▼▼▼▼▼▼▼▼

a. Disconnect the air induction system solenoid coupler from the air induction system solenoid.
b. Connect the pocket tester (Ω × 1) to the air induction system solenoid terminal as shown.

Pocket tester
90890-03112
Analog pocket tester
YU-03112-C

- Positive tester probe →
  Air induction system solenoid terminal “1”
- Negative tester probe →
  Air induction system solenoid terminal “2”

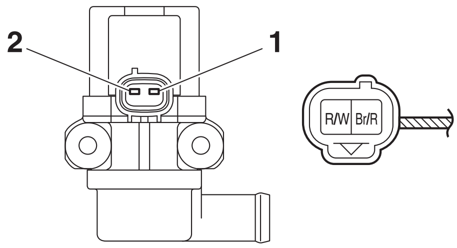

c. Measure the air induction system solenoid resistance.

▲▲▲▲▲▲▲▲▲▲▲▲▲▲▲▲▲▲▲▲▲▲▲▲▲▲▲▲▲▲▲▲▲

EAS31088

CHECKING THE GEAR POSITION SWITCH

1. Remove:
   - Drive sprocket cover
     Refer to “CHAIN DRIVE” on page 4-92.
   - Gear position switch
     Refer to “CRANKCASE” on page 5-70.
2. Check:
   - Gear position switch
     Out of specification → Replace the gear position switch.

Pocket tester
90890-03112
Analog pocket tester
YU-03112-C

Result
Neutral position
Continuity
Positive tester probe
sky blue “1”
Negative tester probe
Switch terminal “a”
1st position
Continuity
Positive tester probe
white “2”
Negative tester probe
Switch terminal “b”
2nd position
Continuity
Positive tester probe
pink “3”
Negative tester probe
Switch terminal “c”
3rd position
Continuity
Positive tester probe
yellow/white “4”
Negative tester probe
Switch terminal “d”
4th position
Continuity
Positive tester probe
white/red “5”
Negative tester probe
Switch terminal “e”
5th position
Continuity
Positive tester probe
orange “6”
Negative tester probe
Switch terminal “f”
6th position
Continuity
Positive tester probe
gray “7”
Negative tester probe
Switch terminal “g”

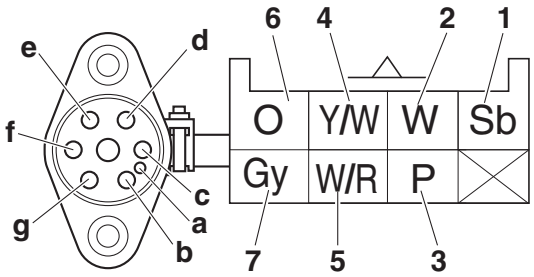

EAS30681

CHECKING THE FUEL INJECTORS

The following procedure applies to all of the fuel injectors.

1. Remove:
   - Fuel injector
     Refer to “THROTTLE BODIES” on page 7-5.
2. Check:
   - Fuel injector resistance
     Out of specification → Replace the fuel injector.

	Resistance **12.0 Ω**

▼▼▼▼▼▼▼▼▼▼▼▼▼▼▼▼▼▼▼▼▼▼▼▼▼▼▼▼▼▼▼▼▼▼

a. Disconnect the fuel injector coupler from the fuel injector.
b. Connect the pocket tester (Ω × 10) to the fuel injector coupler as shown.

	Pocket tester **90890-03112** **Analog pocket tester** **YU-03112-C**

- Positive tester probe
  Fuel injector terminal “1”
- Negative tester probe
  Fuel injector terminal “2”

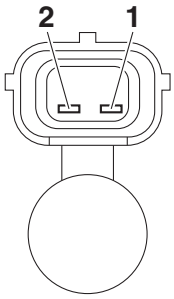

c. Measure the fuel injector resistance.

▲▲▲▲▲▲▲▲▲▲▲▲▲▲▲▲▲▲▲▲▲▲▲▲▲▲▲▲▲▲▲▲▲▲

TROUBLESHOOTING

TROUBLESHOOTING 9-1
GENERAL INFORMATION 9-1
STARTING FAILURE 9-1
INCORRECT ENGINE IDLING SPEED 9-1
POOR MEDIUM-AND-HIGH-SPEED PERFORMANCE 9-2
FAULTY GEAR SHIFTING 9-2
SHIFT PEDAL DOES NOT MOVE 9-2
JUMPS OUT OF GEAR 9-2
FAULTY CLUTCH 9-2
OVERHEATING 9-3
OVERCOOLING 9-3
POOR BRAKING PERFORMANCE 9-3
FAULTY FRONT FORK LEGS 9-3
UNSTABLE HANDLING 9-3
FAULTY LIGHTING OR SIGNALING SYSTEM 9-4

SELF-DIAGNOSTIC FUNCTION AND DIAGNOSTIC CODE TABLE 9-5
SELF-DIAGNOSTIC FUNCTION TABLE 9-5
COMMUNICATION ERROR WITH THE METER OR YAMAHA DIAGNOSTIC TOOL 9-5
DIAGNOSTIC CODE: SENSOR OPERATION TABLE 9-6
DIAGNOSTIC CODE: ACTUATOR OPERATION TABLE 9-8

EAS20090
TROUBLESHOOTING

EAS30599
GENERAL INFORMATION

TIP

The following guide for troubleshooting does not cover all the possible causes of trouble. It should be helpful, however, as a guide to basic troubleshooting. Refer to the relative procedure in this manual for checks, adjustments, and replacement of parts.

EAS30600
STARTING FAILURE

Engine

1. Cylinder(s) and cylinder head
   - Loose spark plug
   - Loose cylinder head or cylinder
   - Damaged cylinder head gasket
   - Damaged cylinder gasket
   - Worn or damaged cylinder
   - Incorrect valve clearance
   - Improperly sealed valve
   - Incorrect valve-to-valve-seat contact
   - Incorrect valve timing
   - Faulty valve spring
   - Seized valve
2. Piston(s) and piston ring(s)
   - Improperly installed piston ring
   - Damaged, worn or fatigued piston ring
   - Seized piston ring
   - Seized or damaged piston
3. Air filter
   - Improperly installed air filter
   - Clogged air filter element
4. Crankcase and crankshaft
   - Improperly assembled crankcase
   - Seized crankshaft

Fuel system

1. Fuel tank
   - Empty fuel tank
   - Clogged fuel tank breather hose
   - Clogged fuel tank overflow hose
   - Deteriorated or contaminated fuel
   - Clogged or damaged fuel hose
2. Fuel pump
   - Faulty fuel pump
   - Clogged overflow filter
   - Faulty relay unit (fuel pump relay)
3. Throttle body (-ies)
   - Deteriorated or contaminated fuel
   - Sucked-in air

Electrical system

1. Battery
   - Discharged battery
   - Faulty battery
2. Fuse(s)
   - Blown, damaged or incorrect fuse
   - Improperly installed fuse
3. Spark plug(s)
   - Incorrect spark plug gap
   - Incorrect spark plug heat range
   - Fouled spark plug
   - Worn or damaged electrode
   - Worn or damaged insulator
   - Faulty spark plug cap
4. Ignition coil(s)
   - Cracked or broken ignition coil body
   - Broken or shorted primary or secondary coils
   - Faulty spark plug lead
5. Ignition system
   - Faulty ECU
   - Faulty crankshaft position sensor
   - Broken generator rotor straight key
6. Switches and wiring
   - Faulty main switch
   - Faulty engine stop switch
   - Broken or shorted wiring
   - Faulty gear position sensor
   - Faulty sidestand switch
   - Faulty clutch switch
   - Improperly grounded circuit
   - Loose connections
7. Starting system
   - Faulty starter motor
   - Faulty starter relay
   - Starting circuit cut-off relay
   - Faulty starter clutch

EAS30601
INCORRECT ENGINE IDLING SPEED

Engine

1. Cylinder(s) and cylinder head
   - Incorrect valve clearance
   - Damaged valve train components
2. Air filter
   - Clogged air filter element

Fuel system

1. Throttle body (-ies)
   - Damaged or loose throttle body joint
   - Faulty ISC (idle speed control) unit
   - Improperly synchronized throttle bodies

- Improper throttle grip free play
- Flooded throttle body
- Faulty air induction system

Electrical system

1. Battery
   - Discharged battery
   - Faulty battery
2. Spark plug(s)
   - Incorrect spark plug gap
   - Incorrect spark plug heat range
   - Fouled spark plug
   - Worn or damaged electrode
   - Worn or damaged insulator
   - Faulty spark plug cap
3. Ignition coil(s)
   - Broken or shorted primary or secondary coils
   - Faulty spark plug lead
   - Cracked or broken ignition coil
4. Ignition system
   - Faulty ECU
   - Faulty crankshaft position sensor
   - Broken generator rotor straight key

EAS30602

POOR MEDIUM-AND-HIGH-SPEED PERFORMANCE

Refer to “STARTING FAILURE” on page 9-1.

Engine

1. Air filter
   - Clogged air filter element

Fuel system

1. Throttle body (-ies)
   - Faulty throttle body
2. Fuel pump
   - Faulty fuel pump

EAS30603

FAULTY GEAR SHIFTING

Shifting is difficult

Refer to “Clutch drags”.

EAS30604

SHIFT PEDAL DOES NOT MOVE

Shift shaft

- Improperly adjusted shift rod
- Bent shift shaft

Shift drum and shift forks

- Foreign object in a shift drum groove
- Seized shift fork
- Bent shift fork guide bar

Transmission

- Seized transmission gear
- Foreign object between transmission gears
- Improperly assembled transmission

EAS30605

JUMPS OUT OF GEAR

Shift shaft

- Incorrect shift pedal position
- Improperly returned stopper lever

Shift forks

- Worn shift fork

Shift drum

- Incorrect axial play
- Worn shift drum groove

Transmission

- Worn gear dog

EAS30849

FAULTY CLUTCH

Clutch slips

1. Clutch
   - Improperly assembled clutch
   - Improperly adjusted clutch cable
   - Loose or fatigued clutch spring
   - Worn friction plate
   - Worn clutch plate
2. Engine oil
   - Incorrect oil level
   - Incorrect oil viscosity (low)
   - Deteriorated oil

Clutch drags

1. Clutch
   - Unevenly tensioned clutch springs
   - Warped pressure plate
   - Bent clutch plate
   - Swollen friction plate
   - Bent clutch pull rod
   - Broken clutch boss
   - Burnt primary driven gear bushing
   - Match marks not aligned
2. Engine oil
   - Incorrect oil level
   - Incorrect oil viscosity (high)
   - Deteriorated oil

EAS30607
OVERHEATING

Engine
1. Clogged coolant passages
   - Cylinder head and piston(s)
   - Heavy carbon buildup
2. Engine oil
   - Incorrect oil level
   - Incorrect oil viscosity
   - Inferior oil quality

Cooling system
1. Coolant
   - Low coolant level
2. Radiator
   - Damaged or leaking radiator
   - Faulty radiator cap
3. Water pump
   - Damaged or faulty water pump
4. Thermostat
   - Thermostat stays closed
5. Hose(s) and pipe(s)
   - Damaged hose
   - Improperly connected hose
   - Damaged pipe
   - Improperly connected pipe

Fuel system
1. Throttle body (-ies)
   - Damaged or loose throttle body joint
2. Air filter
   - Clogged air filter element

Chassis
1. Brake(s)
   - Dragging brake

Electrical system
1. Spark plug(s)
   - Incorrect spark plug gap
   - Incorrect spark plug heat range
2. Ignition system
   - Faulty ECU

EAS30608
OVERCOOLING

Cooling system
1. Thermostat
   - Thermostat stays open

EAS30609
POOR BRAKING PERFORMANCE
- Worn brake pad
- Worn brake disc
- Air in hydraulic brake system
- Leaking brake fluid
- Faulty brake caliper kit
- Faulty brake caliper seal
- Loose union bolt
- Damaged brake hose
- Oil or grease on the brake disc
- Oil or grease on the brake pad
- Incorrect brake fluid level

EAS30610
FAULTY FRONT FORK LEGS

Leaking oil
- Bent, damaged or rusty inner tube
- Cracked or damaged outer tube
- Improperly installed oil seal
- Damaged oil seal lip
- Incorrect oil level (high)
- Loose damper rod bolt
- Damaged damper rod bolt copper washer
- Cracked or damaged front fork cap bolt O-ring

Malfunction
- Bent or damaged inner tube
- Bent or damaged outer tube
- Damaged fork spring
- Worn or damaged outer tube bushing
- Bent or damaged damper rod
- Incorrect oil viscosity
- Incorrect oil level

EAS30611
UNSTABLE HANDLING

Handlebar
- Bent or improperly installed handlebar

Steering head components
- Improperly installed upper bracket
- Improperly installed lower bracket (improperly tightened ring nut)
- Bent steering stem
- Damaged ball bearing or bearing race

Front fork leg(s)
- Uneven oil levels (both front fork legs)
- Unevenly tensioned fork spring (both front fork legs)
- Broken fork spring
- Bent or damaged inner tube
- Bent or damaged outer tube

Swingarm
- Worn bearing or bushing
- Bent or damaged swingarm

Rear shock absorber assembly
- Faulty rear shock absorber spring
- Leaking oil

Tire(s)
- Uneven tire pressures (front and rear)
- Incorrect tire pressure
- Uneven tire wear

Wheel(s)
- Incorrect wheel balance
- Deformed cast wheel
- Damaged wheel bearing
- Bent or loose wheel axle
- Excessive wheel runout

Frame
- Bent frame
- Damaged steering head pipe
- Improperly installed bearing race

EAS30612
FAULTY LIGHTING OR SIGNALING SYSTEM

Headlight does not come on
- Wrong headlight bulb
- Too many electrical accessories
- Hard charging
- Incorrect connection
- Improperly grounded circuit
- Poor contacts (main switch)
- Burnt-out headlight bulb

Headlight bulb burnt out
- Wrong headlight bulb
- Faulty battery
- Faulty rectifier/regulator
- Improperly grounded circuit
- Faulty main switch
- Headlight bulb life expired

Tail/brake light does not come on
- Faulty brake light switch
- Too many electrical accessories
- Incorrect connection
- Faulty tail/brake light assembly

Turn signal does not come on
- Faulty turn signal switch
- Faulty turn signal relay
- Burnt-out turn signal bulb
- Incorrect connection
- Damaged or faulty wire harness
- Improperly grounded circuit
- Faulty battery
- Blown, damaged or incorrect fuse

Turn signal blinks slowly
- Faulty turn signal relay
- Faulty main switch
- Faulty turn signal switch
- Incorrect turn signal bulb

Turn signal remains lit
- Faulty turn signal relay
- Burnt-out turn signal bulb

Turn signal blinks quickly
- Incorrect turn signal bulb
- Faulty turn signal relay
- Burnt-out turn signal bulb

Horn does not sound
- Damaged or faulty horn
- Faulty main switch
- Faulty horn switch
- Faulty battery
- Blown, damaged or incorrect fuse
- Faulty wire harness

EAS20116
SELF-DIAGNOSTIC FUNCTION AND DIAGNOSTIC CODE TABLE

EAS31118
SELF-DIAGNOSTIC FUNCTION TABLE

TIP

For details of the fault code, refer to “TROUBLESHOOTING METHOD” on page 8-35.

Fault code No.	Item
12	Crankshaft position sensor: no normal signals are received from the crankshaft position sensor.
13	Intake air pressure sensor: open or short circuit detected.
14	Intake air pressure sensor: hose system malfunction (clogged hole or loose).
15	Throttle position sensor: open or short circuit detected.
16	Throttle position sensor: stuck throttle position sensor is detected. (signal from throttle position sensor will not change)
19	Sidestand switch: a break or disconnection of the black/red lead of the ECU is detected.
21	Coolant temperature sensor: open or short circuit detected.
22	Intake air temperature sensor: open or short circuit detected.
24	O_2 sensor: no normal signals are received from the O_2 sensor.
30	Latch up detected.
33	Cylinder-#1 ignition coil: open or short circuit detected in the primary lead of the cylinder-#1 ignition coil.
34	Cylinder-#2 ignition coil: open or short circuit detected in the primary lead of the cylinder-#2 ignition coil.
39	Fuel injector: open or short circuit detected.
41	Lean angle sensor: open or short circuit detected.
42	Wheel sensor: no normal signals are received from the wheel sensor.
	Gear position switch: open or short circuit is detected.
	Clutch switch: open or short circuit is detected.
43	Fuel system voltage: incorrect voltage supplied to the fuel injector and fuel pump.
44	EEPROM fault code number: an error is detected while reading or writing on EEPROM.
45	Power shut off : incorrect back up voltage is supplied to ECU.
46	Charging voltage is abnormal.
50	Faulty ECU memory. (When this malfunction is detected in the ECU, the fault code number might not appear on the meter display.)
70	Engine idling stop

EAS31373
COMMUNICATION ERROR WITH THE METER OR YAMAHA DIAGNOSTIC TOOL

TIP

For details of the fault code, refer to “TROUBLESHOOTING METHOD” on page 8-35.

Fault code No.	Item
Er-1 (fault code display)	ECU (engine control unit) internal malfunction (output signal error): signals cannot be transmitted between the ECU and the multi-function meter.

Fault code No.	Item
Waiting for connection (Yamaha diagnostic tool)	ECU (engine control unit) internal malfunction (output signal error): Signals cannot be transmitted between the ECU and Yamaha diagnostic tool.
Er-2	ECU (engine control unit) internal malfunction (output signal error): no signals are received from the ECU within the specified duration.
Er-3	ECU (engine control unit) internal malfunction (output signal error): data from the ECU cannot be received correctly.
Er-4 (fault code display)	ECU (engine control unit) internal malfunction (input signal error): non-registered data has been received from the meter.
Er-4 (Yamaha diagnostic tool)	ECU (engine control unit) internal malfunction (input signal error): no normal signals are received from the Yamaha diagnostic tool.

EAS31120

DIAGNOSTIC CODE: SENSOR OPERATION TABLE

Diagnostic code No.	Item	Meter display	Procedure
01	Throttle position sensor signal • Fully closed position • Fully open position	 14–20 97–107	 Check with throttle valves fully closed. Check with throttle valves fully open.
03	Intake air pressure	Displays the intake air pressure.	Set the engine stop switch to "◯", and then operate the throttle while pushing the start switch "⊛". (If the display value changes, the performance is OK.)
05	Air temperature	Displays the air temperature.	Compare the actually measured air temperature with the meter display value.
06	Coolant temperature	When engine is cold: Displays temperature closer to air temperature. When engine is hot: Displays current coolant temperature.	Compare the actually measured coolant temperature with the meter display value.
07	Speed sensor pulses	Speed sensor pulse 0–999	Check that the number increases when the rear wheel is rotated. The number is cumulative and does not reset each time the wheel is stopped.
08	Lean angle sensor • Upright • Overturned	Lean angle sensor output voltage 0.4–1.4 3.7–4.4	Remove the lean angle sensor and incline it more than 45 degrees.
09	Fuel system voltage (battery voltage)	Approximately 12.0	Set the engine stop switch to "◯", and then compare the actually measured battery voltage with the meter display value. (If the actually measured battery voltage is low, recharge the battery.)

Diagnostic code No.	Item	Meter display	Procedure
20	Sidestand switch • Stand retracted • Stand extended	 ON OFF	Extend and retract the sidestand (with the transmission in gear).
21	Neutral switch and clutch switch • Transmission is in neutral • Transmission is in gear or the clutch lever released • Clutch lever is squeezed with the transmission in gear	 ON OFF ON	Operate the transmission and clutch lever.
60	EEPROM fault code display • No history • History exists	 00 • No malfunctions detected (If the self-diagnosis fault code 44 is indicated, the ECU is defective.) 01–02 (Cylinder fault code) • (If more than one cylinder is defective, the display alternates every two seconds to show all the detected cylinder numbers. When all cylinder numbers are shown, the display repeats the same process.) 11 (Data error for ISC (idle speed control) learning values)	 — —
61	Malfunction history code display • No history • History exists	 00 Fault codes 12–70 • (If more than one code number is detected, the display alternates every two seconds to show all the detected code numbers. When all code numbers are shown, the display repeats the same process.)	 — —

Diagnostic code No.	Item	Meter display	Procedure
62	Malfunction history code erasure • No history • History exists	 00 • Displays the total number of malfunctions, including the current malfunction, that have occurred since the history was last erased. (For example, if there have been three malfunctions, “03” is displayed.)	 — Save the malfunction history to the computer, and then delete the fault codes.
63	Malfunction code reinstatement (for fault code No. 24 only) • No malfunction code • Malfunction code exists	 00 Fault code 24	 — Save the malfunction history to the computer, and then delete the fault codes.
67	ISC (idle speed control) learning condition display ISC (idle speed control) learning data erasure	00 ISC (idle speed control) learning data has been erased. 01 It is not necessary to erase the ISC (idle speed control) learning data. 02 It is necessary to erase the ISC (idle speed control) learning data.	To erase the ISC (idle speed control) learning data, set the engine stop switch from “⊗” to “◯” 3 times in 5 seconds.
70	Control number	0–254 [-]	—

EAS31121

DIAGNOSTIC CODE: ACTUATOR OPERATION TABLE

Diagnostic code No.	Item	Actuation	Procedure
30	Cylinder-#1 ignition coil	Actuates cylinder-#1 ignition coil five times at one-second intervals. The “CHECK” indicator and “” on the Yamaha diagnostic tool screen come on each time the ignition coil is actuated.	Check that a spark is generated five times. • Connect an ignition checker.
31	Cylinder-#2 ignition coil	Actuates cylinder-#2 ignition coil five times at one-second intervals. The “CHECK” indicator and “” on the Yamaha diagnostic tool screen come on each time the ignition coil is actuated.	Check that a spark is generated five times. • Connect an ignition checker.

Diagnostic code No.	Item	Actuation	Procedure
36	Fuel injector #1	Actuates fuel injector #1 five times at one-second intervals. The “CHECK” indicator and “ ” on the Yamaha diagnostic tool screen come on each time the fuel injector is actuated.	Disconnect the fuel pump coupler. Check that fuel injector #1 is actuated five times by listening for the operating sound.
37	Fuel injector #2	Actuates fuel injector #2 five times at one-second intervals. The “CHECK” indicator and “ ” on the Yamaha diagnostic tool screen come on each time the fuel injector is actuated.	Disconnect the fuel pump coupler. Check that fuel injector #2 is actuated five times by listening for the operating sound.
48	Air cut-off valve	Actuates air cut-off valve five times at one-second intervals. The “CHECK” indicator and “ ” on the Yamaha diagnostic tool screen come on each time the air cut-off valve is actuated.	Check fuel operating sound of the air cut-off valve five time.
50	Fuel pump	Actuates the fuel pump five times at one-second intervals. The “CHECK” indicator and “ ” on the Yamaha diagnostic tool screen come on each time the fuel pump is actuated.	Check that the fuel pump is actuated five times by listening for the operating sound.
51	Radiator fan motor relay	Actuates the radiator fan motor relay five times at five-second intervals. The “CHECK” indicator and “ ” on the Yamaha diagnostic tool screen come on each time the relay is actuated.	Check that the radiator fan motor relay is actuated five times by listening for the operating sound.
52	Headlight relay	Actuates the headlight relay five times at five-second intervals. The “CHECK” indicator and “ ” on the Yamaha diagnostic tool screen come on each time the relay is actuated.	Check that the headlight relay is actuated five times by listening for the operating sound.

Diagnostic code No.	Item	Actuation	Procedure
54	ISC valve	Fully closes the ISC valve, and then opens the valve. Fully closes the ISC valve, and then opens the valve. This operation takes approximately 6 seconds. The “CHECK” indicator and “ ” on the Yamaha diagnostic tool screen come on during the operation.	The ISC unit vibrates when the ISC valve operates.

EAS20091

WIRING DIAGRAM

MTN320-A 2016

1. Main switch
2. Diode 1
3. Ignition fuse
4. Signaling system fuse
5. ABS ECU fuse
6. Backup fuse
7. Headlight fuse
8. Radiator fan motor fuse
9. ABS motor fuse
10. ABS solenoid fuse
11. AC magneto
12. Crankshaft position sensor
13. Rectifier/regulator
14. Battery
15. Engine ground
16. Main fuse
17. Starter relay
18. Starter motor
19. Diode 2
20. Diode 3
21. Sidestand switch
22. Starting circuit cut-off relay
23. Diode 4
24. Fuel pump relay
25. Fuel pump
26. Fuel sender
27. Intake air pressure sensor
28. Intake air temperature sensor
29. Throttle position sensor
30. O_2 sensor
31. Lean angle sensor
32. ECU (Engine Control Unit)
33. Ignition coil
34. Spark plug #1
35. Ignition coil #2
36. Spark plug #2
37. Fuel injector #1
38. Fuel injector #2
39. Air induction system solenoid
40. ISC (Idle Speed Control) unit
41. Coolant temperature sensor
42. Front wheel sensor
43. Rear wheel sensor
44. ABS ECU coupler
45. ABS test coupler
46. ABS ECU
47. Yamaha diagnostic tool coupler
48. Meter assembly
49. ABS warning light
50. Oil pressure warning light
51. Neutral indicator light
52. Tachometer
53. Multi-function meter 1
54. Engine trouble warning light
55. Shift timing indicator light
56. Multi-function meter 2
57. High beam indicator light
58. Turn signal indicator light
59. Meter light
60. Oil pressure switch
61. Gear position switch
62. Turn signal relay
63. Handlebar switch (left)
64. Pass switch
65. Dimmer switch
66. Horn switch
67. Horn
68. Clutch switch
69. Turn signal switch
70. Rear turn signal light (left)
71. Rear turn signal light (right)
72. Headlight
73. Front turn signal light (left)
74. Front turn signal light (right)
75. Auxiliary light
76. Handlebar switch (right)
77. Front brake light switch
78. Start switch
79. Engine stop switch
80. Rear brake light switch
81. Tail/brake light
82. License plate light
83. License plate light connector
84. Headlight relay
85. Radiator fan motor relay
86. Radiator fan motor

A. Wire harness
B. Negative battery sub-wire harness
C. Oil pressure switch sub lead

EAS30613

COLOR CODE

B	Black
Br	Brown
Ch	Chocolate
Dg	Dark green
G	Green
Gy	Gray
L	Blue
O	Orange
P	Pink
R	Red
Sb	Sky blue
W	White
Y	Yellow
B/L	Black/Blue
B/R	Black/Red
B/W	Black/White
B/Y	Black/Yellow
Br/R	Brown/Red
Br/W	Brown/White
G/B	Green/Black
G/R	Green/Red
G/W	Green/White
G/Y	Green/Yellow
Gy/G	Gray/Green
Gy/R	Gray/Red
L/B	Blue/Black
L/W	Blue/White
L/Y	Blue/Yellow
P/B	Pink/Black
P/L	Pink/Blue
P/W	Pink/White
R/B	Red/Black
R/G	Red/Green
R/L	Red/Blue
R/W	Red/White
R/Y	Red/Yellow
Sb/W	Sky blue/White
W/R	White/Red
W/Y	White/Yellow
Y/B	Yellow/Black
Y/G	Yellow/Green
Y/L	Yellow/Blue
Y/R	Yellow/Red
Y/W	Yellow/White

YAMAHA

MTN320-A 2016
WIRING DIAGRAM

MTN320-A 2016
SCHÉMA DE CÂBLAGE

MTN320-A 2016
SCHALTPLAN

MTN320-A 2016
SCHEMA ELETTRICO

MTN320-A 2016
DIAGRAMA ELÉCTRICO

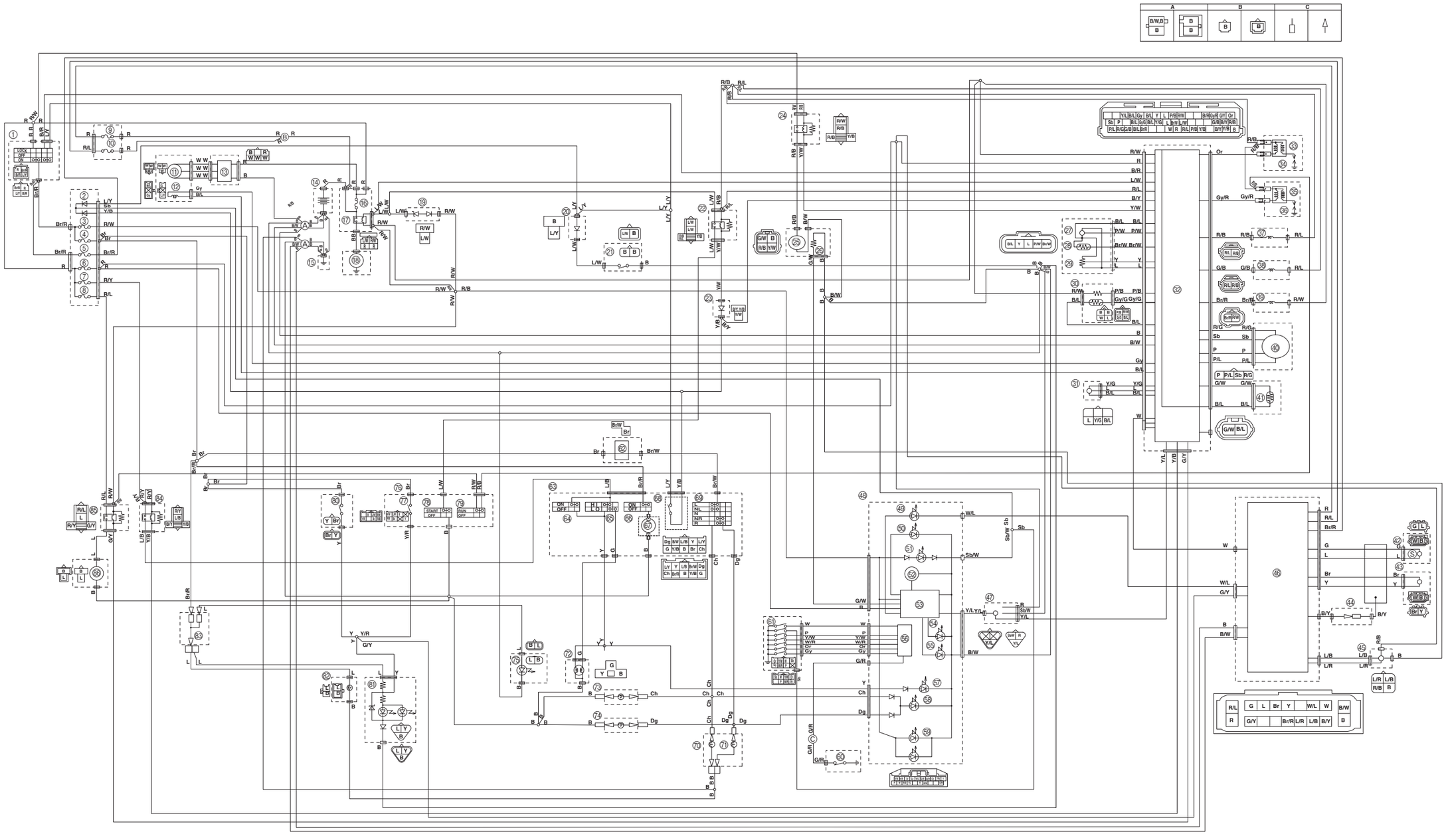

MTN320-A 2016
WIRING DIAGRAM

MTN320-A 2016
SCHÉMA DE CÂBLAGE

MTN320-A 2016
SCHALTPLAN

MTN320-A 2016
SCHEMA ELETTRICO
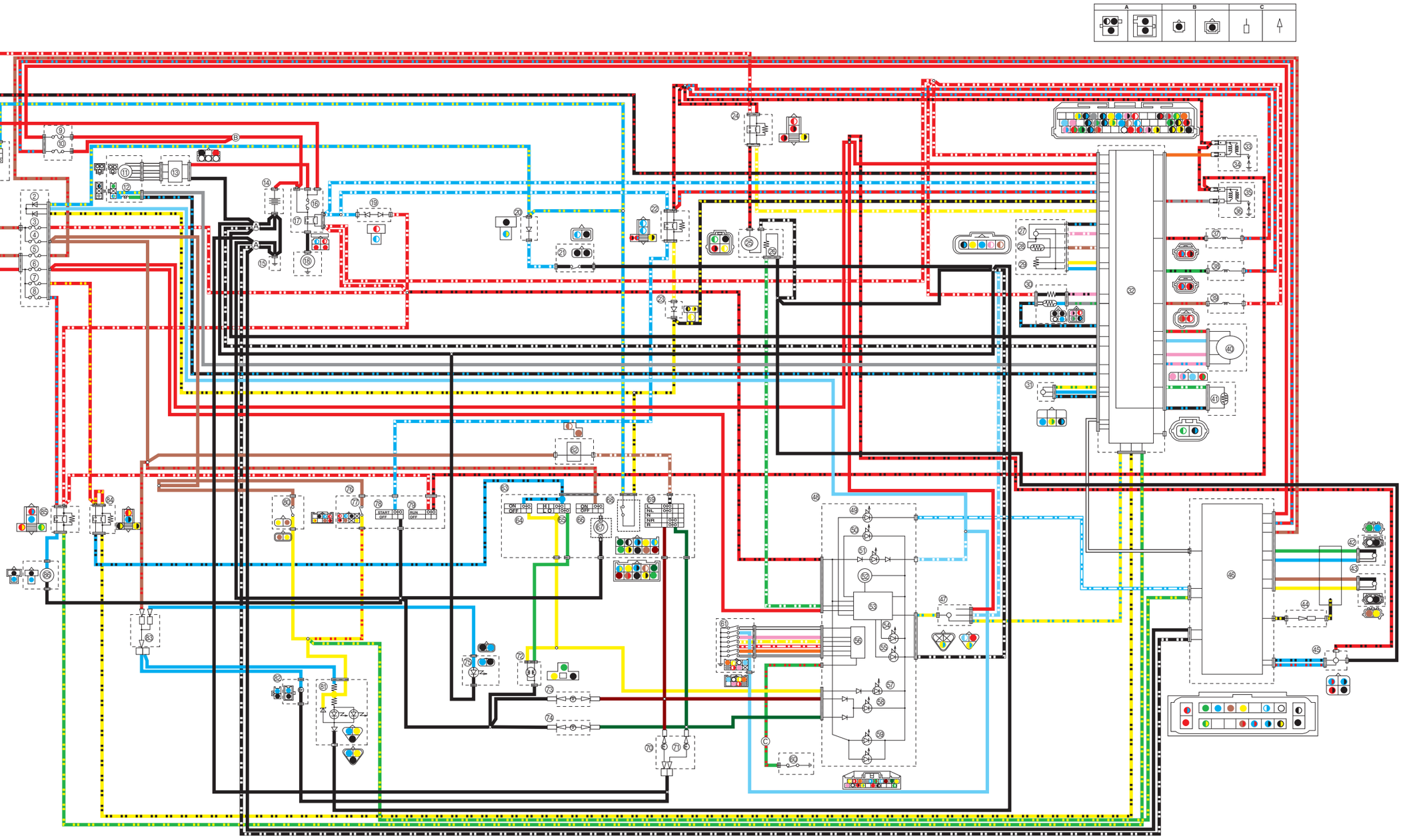
MTN320-A 2016
DIAGRAMA ELÉCTRICO